NO. CKTS	DIM. A	DIM. B
2	5.08 .200	2.54 .100
3	7.62 .300	5.08 .200
4	10.16 .400	7.62 .300
5	12.70 .500	10.16 .400
6	15.24 .600	12.70 .500
7	17.78 .700	15.24 .600
8	20.32 .800	17.78 .700
9	22.86 .900	20.32 .800
10	25.40 1.000	22.86 .900
11	27.94 1.100	25.40 1.000
12	30.48 1.200	27.94 1.100
13	33.02 1.300	30.48 1.200
14	35.56 1.400	33.02 1.300
15	38.10 1.500	35.56 1.400
16	40.64 1.600	38.10 1.500
17	43.18 1.700	40.64 1.600
18	45.72 1.800	43.18 1.700
19	48.26 1.900	45.72 1.800
20	50.80 2.000	48.26 1.900
21	53.34 2.100	50.80 2.000
22	55.88 2.200	53.34 2.100
23	58.42 2.300	55.88 2.200
24	60.96 2.400	58.42 2.300
25	63.50 2.500	60.96 2.400
26	66.04 2.600	63.50 2.500
27	68.58 2.700	66.04 2.600
28	71.12 2.800	68.58 2.700
29	73.66 2.900	71.12 2.800
30	76.20 3.000	73.66 2.900
31	78.74 3.100	76.20 3.000
32	81.28 3.200	78.74 3.100
33	83.82 3.300	81.28 3.200
34	86.36 3.400	83.82 3.300
35	88.90 3.500	86.36 3.400
36	91.44 3.600	88.90 3.500

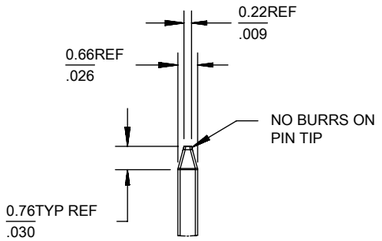

DETAIL X
SCALE 5:1
SEE NOTE 10

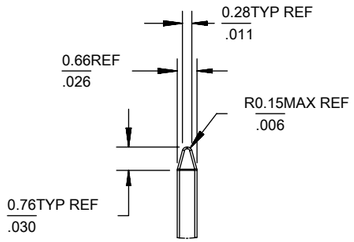

DETAIL Y
SCALE 5:1
SEE NOTE 10

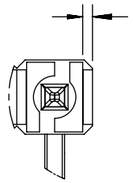

DETAIL Z
SCALE 5:1

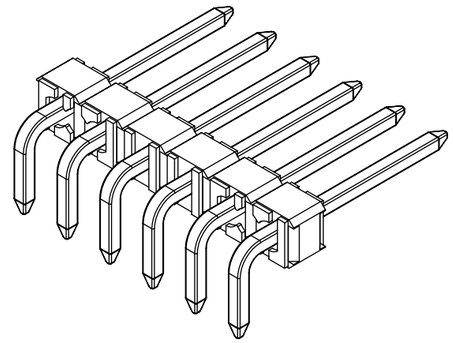

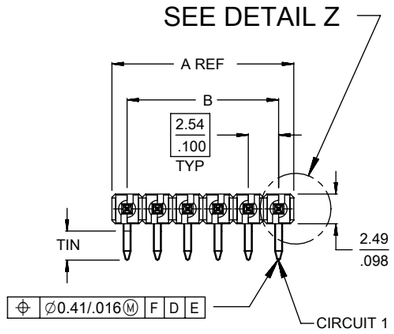

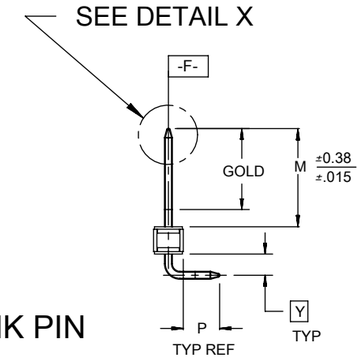



OPTIONAL KINK PIN
SEE NOTE 7

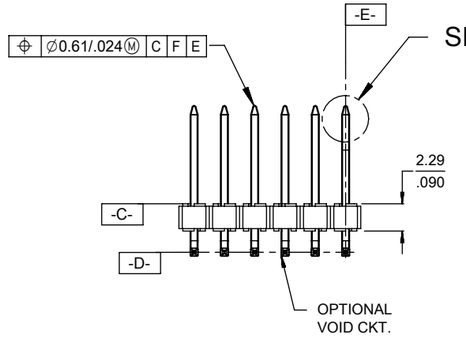

NOTES:
1. MATERIAL: GLASS FILLED NYLON
   UL94V-0, COLOR: BLACK
2. FINISH:
   (154) OVERALL TIN: 0.00254/.000100 MIN. OVER
   NICKEL: 0.00127/.000050 MIN.
   (208) SELECT GOLD: 0.00038/.000015 MIN,
   SELECT TIN: 0.00254/.000100 MIN,
   WITH OVERALL NICKEL UNDERPLATE: 0.00127/.000050 MIN.
   (228) SELECT GOLD: 0.00076/.000030 MIN,
   SELECT TIN: 0.00254/.000100 MIN,
   WITH OVERALL NICKEL UNDERPLATE: 0.00127/.000050 MIN.
3. PRODUCT SPECIFICATION: PS 10-07.
4. PACKAGING INFORMATION: SEE TABLES
5. SOLDERABILITY PER SMES-152.
6. PIN PUSH OUT FORCE: 3 LBS. MIN
7. KINK PIN OPTION NOT RECOMMENDED FOR 2 CIRCUIT PARTS.
   HOLE SIZE MAY NEED TO BE ADJUSTED FOR 2 CIRCUIT PARTS
   WITH KINK OPTION FOR PROPER INSERTION INTO THE PCB.
   SEE SMES-42003 FOR ADDITIONAL INFORMATION
   ON KINK PIN DIRECTION AND PLACEMENT.
8. HEADERS ARE NOT STACKABLE ON 2.54/.100 CENTERS.
9. THIS PART CONFORMS TO CLASS B REQUIREMENTS OF
   COSMETIC SPECIFICATION PS-45499-002.
10. PIN TIP DIMENSIONS ARE SHOWN FOR REFERENCE ONLY.
    DIMENSIONS APPLY PRIOR TO PLATING OR ASSEMBLY.

2-*	Y
1	Y
SHEET	REV

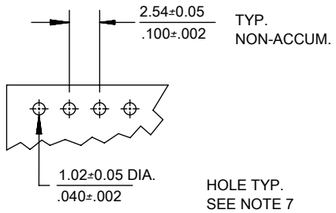

TYP. HOLE PATTERN
FOR 1.57/.062 THK. PCB

DOCUMENT STATUS	P1	RELEASE DATE	2024/10/25 14:08:54

FORMAT: Eng-lega-master-tb-prod-B
REVISION: E
DATE: 2020/01/14

THIS DRAWING CONTAINS INFORMATION THAT IS PROPRIETARY TO MOLEX ELECTRONIC TECHNOLOGIES, LLC AND SHOULD NOT BE USED WITHOUT WRITTEN PERMISSION

FUNCTIONAL SYMBOLS
(EA) = 0
(EC) = 0
(EP) = 0
DIVISIONAL SYMBOLS

DIMENSION UNITS: mm
SCALE: 1:1

GENERAL TOLERANCES (UNLESS SPECIFIED)

	MM	INCH
4 PLACES	±	±
3 PLACES	±	± 0.01
2 PLACES	± 0.25	± 0.015
1 PLACE	± 0.38	±
0 PLACES	±	±
ANGULAR TOL	± °	

DRAFT WHERE APPLICABLE MUST REMAIN WITHIN DIMENSIONS

CURRENT REV DESC:

EC NO: 802440
DRWN: MANOJA7 2024/07/31
CHK'D: ISHWARG 2024/10/25
APPR: ISHWARG 2024/10/25

INITIAL REVISION:
DRWN: JSCHAFER 11/24/03
APPR: MARGULIS 11/24/03

THIRD ANGLE PROJECTION | DRAWING: B-SIZE | SERIES: 42377

molex

KK 100 HEADER ASSEMBLY
FLAT RIGHT ANGLE BREAKAWAY

PRODUCT CUSTOMER DRAWING

DOCUMENT NUMBER	DOC TYPE	DOC PART	REVISION
SD-42377-001	PSD	000	Y2

MATERIAL NUMBER	CUSTOMER	SHEET NUMBER
SEE CHART	GENERAL MARKET	1 OF 1

✓ A-42377-0002 / 0036	
HEADER NUMBER:	42312-0036
PIN NUMBER:	42663-AZA154
PIN LENGTH: L	.550/13.97
MATING LENGTH: M	.244/6.20
GOLD POINT: G	N/A
PI N HEIGHT: Y	.070/1.78
PC TAIL LENGTH: P	.120/3.05
TIN: T	OVERALL
CKTS:	2-36
KINKS:	NONE
REMOVED BACKWALLS:	NONE
VOIDED CKTS:	NONE
PACKAGING:	BULK PK-40873-0041

CKTS	MATERIAL NUMBER	ENG NUMBER	CKTS	MATERIAL NUMBER	ENG NUMBER
02	22-28-8020	42377-0002	20	22-28-8200	42377-0020
03	22-28-8030	42377-0003	21	22-28-8210	42377-0021
04	22-28-8040	42377-0004	22	22-28-8220	42377-0022
05	22-28-8050	42377-0005	23	22-28-8230	42377-0023
06	22-28-8060	42377-0006	24	22-28-8240	42377-0024
07	22-28-8070	42377-0007	25	22-28-8250	42377-0025
08	22-28-8080	42377-0008	26	22-28-8260	42377-0026
09	22-28-8090	42377-0009	27	22-28-8270	42377-0027
10	22-28-8100	42377-0010	28	22-28-8280	42377-0028
11	22-28-8110	42377-0011	29	22-28-8290	42377-0029
12	22-28-8120	42377-0012	30	22-28-8300	42377-0030
13	22-28-8130	42377-0013	31	22-28-8310	42377-0031
14	22-28-8140	42377-0014	32	22-28-8320	42377-0032
15	22-28-8150	42377-0015	33	22-28-8330	42377-0033
16	22-28-8160	42377-0016	34	22-28-8340	42377-0034
17	22-28-8170	42377-0017	35	22-28-8350	42377-0035
18	22-28-8180	42377-0018	36	22-28-8360	42377-0036
19	22-28-8190	42377-0019			

✓ A-42377-0037 / 0071	
HEADER NUMBER:	42312-0036
PIN NUMBER:	42663-BSA154
PIN LENGTH: L	.640/16.00
MATING LENGTH: M	.324/8.23
GOLD POINT: G	N/A
PI N HEIGHT: Y	.070/1.78
PC TAIL LENGTH: P	.120/3.05
TIN: T	OVERALL
CKTS:	2-36
KINKS:	NONE
REMOVED BACKWALLS:	NONE
VOIDED CKTS:	NONE
PACKAGING:	BULK PK-40873-0041

CKTS	MATERIAL NUMBER	ENG NUMBER	CKTS	MATERIAL NUMBER	ENG NUMBER
02	22-28-8021	42377-0037	20	22-28-8201	42377-0055
03	22-28-8031	42377-0038	21	22-28-8211	42377-0056
04	22-28-8041	42377-0039	22	22-28-8221	42377-0057
05	22-28-8051	42377-0040	23	22-28-8231	42377-0058
06	22-28-8061	42377-0041	24	22-28-8241	42377-0059
07	22-28-8071	42377-0042	25	22-28-8251	42377-0060
08	22-28-8081	42377-0043	26	22-28-8261	42377-0061
09	22-28-8091	42377-0044	27	22-28-8271	42377-0062
10	22-28-8101	42377-0045	28	22-28-8281	42377-0063
11	22-28-8111	42377-0046	29	22-28-8291	42377-0064
12	22-28-8121	42377-0047	30	22-28-8301	42377-0065
13	22-28-8131	42377-0048	31	22-28-8311	42377-0066
14	22-28-8141	42377-0049	32	22-28-8321	42377-0067
15	22-28-8151	42377-0050	33	22-28-8331	42377-0068
16	22-28-8161	42377-0051	34	22-28-8341	42377-0069
17	22-28-8171	42377-0052	35	22-28-8351	42377-0070
18	22-28-8181	42377-0053	36	22-28-8361	42377-0071
19	22-28-8191	42377-0054			

REV:	ECM INFORMATION:	TITLE:	SHEET No.
Y2	ECM No: **107985** DATE: **10/25/2024**	**KK 100 HEADER ASSEMBLY** **FLAT RIGHT ANGLE** **BREAKAWAY**	**- 2 -**

DOCUMENT NUMBER:	CREATED / REVISED BY:	CHECKED BY:	APPROVED BY:
SD- 42377-001	**BAPPELDORN**	**MKIPPER**	**FSMITH**

✓ A-42377-0072 / 0106	
HEADER NUMBER:	42312-0036
PIN NUMBER:	42663-AZB208
PIN LENGTH: L	.550/13.97
MATING LENGTH: M	.244/6.20
GOLD POINT: G	.140/3.56
PIN HEIGHT: Y	.070/1.78
PC TAIL LENGTH: P	.120/3.05
TIN: T	.135/3.43
CKTS:	2-36
KINKS:	NONE
REMOVED BACKWALLS:	NONE
VOIDED CKTS:	NONE
PACKAGING:	BULK PK-40873-0041

CKTS	MATERIAL NUMBER	ENG NUMBER	CKTS	MATERIAL NUMBER	ENG NUMBER
02	22-28-8022	42377-0072	20	22-28-8202	42377-0090
03	22-28-8032	42377-0073	21	22-28-8212	42377-0091
04	22-28-8042	42377-0074	22	22-28-8222	42377-0092
05	22-28-8052	42377-0075	23	22-28-8232	42377-0093
06	22-28-8062	42377-0076	24	22-28-8242	42377-0094
07	22-28-8072	42377-0077	25	22-28-8252	42377-0095
08	22-28-8082	42377-0078	26	22-28-8262	42377-0096
09	22-28-8092	42377-0079	27	22-28-8272	42377-0097
10	22-28-8102	42377-0080	28	22-28-8282	42377-0098
11	22-28-8112	42377-0081	29	22-28-8292	42377-0099
12	22-28-8122	42377-0082	30	22-28-8302	42377-0100
13	22-28-8132	42377-0083	31	22-28-8312	42377-0101
14	22-28-8142	42377-0084	32	22-28-8322	42377-0102
15	22-28-8152	42377-0085	33	22-28-8332	42377-0103
16	22-28-8162	42377-0086	34	22-28-8342	42377-0104
17	22-28-8172	42377-0087	35	22-28-8352	42377-0105
18	22-28-8182	42377-0088	36	22-28-8362	42377-0106
19	22-28-8192	42377-0089			

✓ A-42377-0107 / 0141	
HEADER NUMBER:	42312-0036
PIN NUMBER:	42663-BSB208
PIN LENGTH: L	.630/16.00
MATING LENGTH: M	.324/8.23
GOLD POINT: G	.140/3.56 MIN
PIN HEIGHT: Y	.070/1.78
PC TAIL LENGTH: P	.120/3.05
TIN: T	.135/3.43
CKTS:	2-36
KINKS:	NONE
REMOVED BACKWALLS:	NONE
VOIDED CKTS:	NONE
PACKAGING:	BULK PK-40873-0041

CKTS	MATERIAL NUMBER	ENG NUMBER	CKTS	MATERIAL NUMBER	ENG NUMBER
02	22-28-8023	42377-0107	20	22-28-8203	42377-0125
03	22-28-8033	42377-0108	21	22-28-8213	42377-0126
04	22-28-8043	42377-0109	22	22-28-8223	42377-0127
05	22-28-8053	42377-0110	23	22-28-8233	42377-0128
06	22-28-8063	42377-0111	24	22-28-8243	42377-0129
07	22-28-8073	42377-0112	25	22-28-8253	42377-0130
08	22-28-8083	42377-0113	26	22-28-8263	42377-0131
09	22-28-8093	42377-0114	27	22-28-8273	42377-0132
10	22-28-8103	42377-0115	28	22-28-8283	42377-0133
11	22-28-8113	42377-0116	29	22-28-8293	42377-0134
12	22-28-8123	42377-0117	30	22-28-8303	42377-0135
13	22-28-8133	42377-0118	31	22-28-8313	42377-0136
14	22-28-8143	42377-0119	32	22-28-8323	42377-0137
15	22-28-8153	42377-0120	33	22-28-8333	42377-0138
16	22-28-8163	42377-0121	34	22-28-8343	42377-0139
17	22-28-8173	42377-0122	35	22-28-8353	42377-0140
18	22-28-8183	42377-0123	36	22-28-8363	42377-0141
19	22-28-8193	42377-0124			

REV:	ECM INFORMATION:	TITLE:	SHEET No.
Y2	ECM No: **107985** DATE: **10/25/2024**	**KK 100 HEADER ASSEMBLY FLAT RIGHT ANGLE BREAKAWAY**	**- 3 -**

DOCUMENT NUMBER:	CREATED / REVISED BY:	CHECKED BY:	APPROVED BY:
SD- 42377-001	**BAPPELDORN**	**MKIPPER**	**FSMITH**

✓ A-42377-0142 / 0176	
HEADER NUMBER:	42312-0036
PIN NUMBER:	42663-BCA154
PIN LENGTH: L	.565/14.35
MATING LENGTH: M	.244/6.20
GOLD POINT: G	N/A
PIN HEIGHT: Y	.070/1.78
PC TAIL LENGTH: P	.135/3.43.
TIN: T	OVERALL
CKTS:	2-36
KINKS:	PER SMES-42003
REMOVED BACKWALLS:	NONE
VOIDED CKTS:	NONE
PACKAGING:	BULK PK-40873-0041

CKTS	MATERIAL NUMBER	ENG NUMBER	CKTS	MATERIAL NUMBER	ENG NUMBER
02	22-28-9020	42377-0142	20	22-28-9200	42377-0160
03	22-28-9030	42377-0143	21	22-28-9210	42377-0161
04	22-28-9040	42377-0144	22	22-28-9220	42377-0162
05	22-28-9050	42377-0145	23	22-28-9230	42377-0163
06	22-28-9060	42377-0146	24	22-28-9240	42377-0164
07	22-28-9070	42377-0147	25	22-28-9250	42377-0165
08	22-28-9080	42377-0148	26	22-28-9260	42377-0166
09	22-28-9090	42377-0149	27	22-28-9270	42377-0167
10	22-28-9100	42377-0150	28	22-28-9280	42377-0168
11	22-28-9110	42377-0151	29	22-28-9290	42377-0169
12	22-28-9120	42377-0152	30	22-28-9300	42377-0170
13	22-28-9130	42377-0153	31	22-28-9310	42377-0171
14	22-28-9140	42377-0154	32	22-28-9320	42377-0172
15	22-28-9150	42377-0155	33	22-28-9330	42377-0173
16	22-28-9160	42377-0156	34	22-28-9340	42377-0174
17	22-28-9170	42377-0157	35	22-28-9350	42377-0175
18	22-28-9180	42377-0158	36	22-28-9360	42377-0176
19	22-28-9190	42377-0159			

✓ A-42377-0177 / 0211	
HEADER NUMBER:	42312-0036
PIN NUMBER:	42663-BXA154
PIN LENGTH: L	.645/16.38
MATING LENGTH: M	.324/8.23
GOLD POINT: G	N/A
PIN HEIGHT: Y	.070/1.78
PC TAIL LENGTH: P	.135/3.43
TIN: T	OVERALL
CKTS:	2-36
KINKS:	PER SMES-42003
REMOVED BACKWALLS:	NONE
VOIDED CKTS:	NONE
PACKAGING:	BULK PK-40873-0041

CKTS	MATERIAL NUMBER	ENG NUMBER	CKTS	MATERIAL NUMBER	ENG NUMBER
02	22-28-9021	42377-0177	20	22-28-9201	42377-0195
03	22-28-9031	42377-0178	21	22-28-9211	42377-0196
04	22-28-9041	42377-0179	22	22-28-9221	42377-0197
05	22-28-9051	42377-0180	23	22-28-9231	42377-0198
06	22-28-9061	42377-0181	24	22-28-9241	42377-0199
07	22-28-9071	42377-0182	25	22-28-9251	42377-0200
08	22-28-9081	42377-0183	26	22-28-9261	42377-0201
09	22-28-9091	42377-0184	27	22-28-9271	42377-0202
10	22-28-9101	42377-0185	28	22-28-9281	42377-0203
11	22-28-9111	42377-0186	29	22-28-9291	42377-0204
12	22-28-9121	42377-0187	30	22-28-9301	42377-0205
13	22-28-9131	42377-0188	31	22-28-9311	42377-0206
14	22-28-9141	42377-0189	32	22-28-9321	42377-0207
15	22-28-9151	42377-0190	33	22-28-9331	42377-0208
16	22-28-9161	42377-0191	34	22-28-9341	42377-0209
17	22-28-9171	42377-0192	35	22-28-9351	42377-0210
18	22-28-9181	42377-0193	36	22-28-9361	42377-0211
19	22-28-9191	42377-0194			

REV:	ECM INFORMATION:	TITLE:	SHEET No.
Y2	ECM No: **107985** DATE: **10/25/2024**	**KK 100 HEADER ASSEMBLY FLAT RIGHT ANGLE BREAKAWAY**	**- 4 -**

DOCUMENT NUMBER:	CREATED / REVISED BY:	CHECKED BY:	APPROVED BY:
SD- 42377-001	**BAPPELDORN**	**MKIPPER**	**FSMITH**

✓ A-42377-0212/0246	
HEADER NUMBER:	42312-0036
PIN NUMBER:	42663-BCB208
PIN LENGTH: L	.565/14.35
MATING LENGTH: M	.244/6.20
GOLD POINT: G	.100/2.54
PIN HEIGHT: Y	.070/1.78
PC TAIL LENGTH: P	. 135/3.43
TIN: T	. 135/3.43
CKTS:	2-36
KINKS:	PER SMES-42003
REMOVED BACKWALLS:	NONE
VOIDED CKTS:	NONE
PACKAGING:	BULK PK-40873-0041

CKTS	MATERIAL NUMBER	ENG NUMBER	CKTS	MATERIAL NUMBER	ENG NUMBER
02	22-28-9022	42377-0212	20	22-28-9202	42377-0230
03	22-28-9032	42377-0213	21	22-28-9212	42377-0231
04	22-28-9042	42377-0214	22	22-28-9222	42377-0232
05	22-28-9052	42377-0215	23	22-28-9232	42377-0233
06	22-28-9062	42377-0216	24	22-28-9242	42377-0234
07	22-28-9072	42377-0217	25	22-28-9252	42377-0235
08	22-28-9082	42377-0218	26	22-28-9262	42377-0236
09	22-28-9092	42377-0219	27	22-28-9272	42377-0237
10	22-28-9102	42377-0220	28	22-28-9282	42377-0238
11	22-28-9112	42377-0221	29	22-28-9292	42377-0239
12	22-28-9122	42377-0222	30	22-28-9302	42377-0240
13	22-28-9132	42377-0223	31	22-28-9312	42377-0241
14	22-28-9142	42377-0224	32	22-28-9322	42377-0242
15	22-28-9152	42377-0225	33	22-28-9332	42377-0243
16	22-28-9162	42377-0226	34	22-28-9342	42377-0244
17	22-28-9172	42377-0227	35	22-28-9352	42377-0245
18	22-28-9182	42377-0228	36	22-28-9362	42377-0246
19	22-28-9192	42377-0229			

✓ A-42377-0247-0281	
HEADER NUMBER:	42312-0036
PIN NUMBER:	42663-BXB208
PIN LENGTH: L	.645/16.38
MATING LENGTH: M	.324/8.23
GOLD POINT: G	.140/3.56
PIN HEIGHT: Y	.070/1.78
PC TAIL LENGTH: P	.135/3.43
TIN: T	.135/3.43
CKTS:	2-36
KINKS:	PER SMES-42003
REMOVED BACKWALLS:	NONE
VOIDED CKTS:	NONE
PACKAGING:	BULK PK-40873-0041

CKTS	MATERIAL NUMBER	ENG NUMBER	CKTS	MATERIAL NUMBER	ENG NUMBER
02	22-28-9023	42377-0247	20	22-28-9203	42377-0265
03	22-28-9033	42377-0248	21	22-28-9213	42377-0266
04	22-28-9043	42377-0249	22	22-28-9223	42377-0267
05	22-28-9053	42377-0250	23	22-28-9233	42377-0268
06	22-28-9063	42377-0251	24	22-28-9243	42377-0269
07	22-28-9073	42377-0252	25	22-28-9253	42377-0270
08	22-28-9083	42377-0253	26	22-28-9263	42377-0271
09	22-28-9093	42377-0254	27	22-28-9273	42377-0272
10	22-28-9103	42377-0255	28	22-28-9283	42377-0273
11	22-28-9113	42377-0256	29	22-28-9293	42377-0274
12	22-28-9123	42377-0257	30	22-28-9303	42377-0275
13	22-28-9133	42377-0258	31	22-28-9313	42377-0276
14	22-28-9143	42377-0259	32	22-28-9323	42377-0277
15	22-28-9153	42377-0260	33	22-28-9333	42377-0278
16	22-28-9163	42377-0261	34	22-28-9343	42377-0279
17	22-28-9173	42377-0262	35	22-28-9353	42377-0280
18	22-28-9183	42377-0263	36	22-28-9363	42377-0281
19	22-28-9193	42377-0264			

REV:	ECM INFORMATION:	TITLE:	SHEET No.
Y2	ECM No: **107985** DATE: **10/25/2024**	**KK 100 HEADER ASSEMBLY** **FLAT RIGHT ANGLE** **BREAKAWAY**	**- 5 -**

DOCUMENT NUMBER:	CREATED / REVISED BY:	CHECKED BY:	APPROVED BY:
SD- 42377-001	**BAPPELDORN**	**MKIPPER**	**FSMITH**

✓ A-42377-0282 / 0316	
HEADER NUMBER:	42312-0036
PIN NUMBER:	42663-AZB228
PIN LENGTH: L	.550/13.97
MATING LENGTH: M	.244/6.20
GOLD POINT: G	.140/3.56
PIN HEIGHT: Y	.070/1.78
PC TAIL LENGTH: P	.120/3.05
TIN: T	.135/3.43
CKTS:	2-36
KINKS:	NONE
REMOVED BACKWALLS:	NONE
VOIDED CKTS:	NONE
PACKAGING:	BULK PK-40873-0041

CKTS	MATERIAL NUMBER	ENG NUMBER	CKTS	MATERIAL NUMBER	ENG NUMBER
02	22-28-8024	42377-0282	20	22-28-8204	42377-0300
03	22-28-8034	42377-0283	21	22-28-8214	42377-0301
04	22-28-8044	42377-0284	22	22-28-8224	42377-0302
05	22-28-8054	42377-0285	23	22-28-8234	42377-0303
06	22-28-8064	42377-0286	24	22-28-8244	42377-0304
07	22-28-8074	42377-0287	25	22-28-8254	42377-0305
08	22-28-8084	42377-0288	26	22-28-8264	42377-0306
09	22-28-8094	42377-0289	27	22-28-8274	42377-0307
10	22-28-8104	42377-0290	28	22-28-8284	42377-0308
11	22-28-8114	42377-0291	29	22-28-8294	42377-0309
12	22-28-8124	42377-0292	30	22-28-8304	42377-0310
13	22-28-8134	42377-0293	31	22-28-8314	42377-0311
14	22-28-8144	42377-0294	32	22-28-8324	42377-0312
15	22-28-8154	42377-0295	33	22-28-8334	42377-0313
16	22-28-8164	42377-0296	34	22-28-8344	42377-0314
17	22-28-8174	42377-0297	35	22-28-8354	42377-0315
18	22-28-8184	42377-0298	36	22-28-8364	42377-0316
19	22-28-8194	42377-0299			

✓ A-42377-0317 / 0351	
HEADER NUMBER:	42312-0036
PIN NUMBER:	42663-BSB228
PIN LENGTH: L	.630/16.00
MATING LENGTH: M	.324/8.23
GOLD POINT: G	.140/3.56
PIN HEIGHT: Y	.070/1.78
PC TAIL LENGTH: P	.120/3.05
TIN: T	.135/3.43
CKTS:	2-36
KINKS:	NONE
REMOVED BACKWALLS:	NONE
VOIDED CKTS:	NONE
PACKAGING:	BULK PK-40873-0041

CKTS	MATERIAL NUMBER	ENG NUMBER	CKTS	MATERIAL NUMBER	ENG NUMBER
02	22-28-8025	42377-0317	20	22-28-8205	42377-0335
03	22-28-8035	42377-0318	21	22-28-8215	42377-0336
04	22-28-8045	42377-0319	22	22-28-8225	42377-0337
05	22-28-8055	42377-0320	23	22-28-8235	42377-0338
06	22-28-8065	42377-0321	24	22-28-8245	42377-0339
07	22-28-8075	42377-0322	25	22-28-8255	42377-0340
08	22-28-8085	42377-0323	26	22-28-8265	42377-0341
09	22-28-8095	42377-0324	27	22-28-8275	42377-0342
10	22-28-8105	42377-0325	28	22-28-8285	42377-0343
11	22-28-8115	42377-0326	29	22-28-8295	42377-0344
12	22-28-8125	42377-0327	30	22-28-8305	42377-0345
13	22-28-8135	42377-0328	31	22-28-8315	42377-0346
14	22-28-8145	42377-0329	32	22-28-8325	42377-0347
15	22-28-8155	42377-0330	33	22-28-8335	42377-0348
16	22-28-8165	42377-0331	34	22-28-8345	42377-0349
17	22-28-8175	42377-0332	35	22-28-8355	42377-0350
18	22-28-8185	42377-0333	36	22-28-8365	42377-0351
19	22-28-8195	42377-0334			

REV:	ECM INFORMATION:	TITLE:	SHEET No.
Y2	ECM No: **107985** DATE: **10/25/2024**	**KK 100 HEADER ASSEMBLY** **FLAT RIGHT ANGLE** **BREAKAWAY**	**- 6 -**

DOCUMENT NUMBER:	CREATED / REVISED BY:	CHECKED BY:	APPROVED BY:
SD- 42377-001	**BAPPELDORN**	**MKIPPER**	**FSMITH**

✓ A-42377-0352/0386	
HEADER NUMBER:	42312-0036
PIN NUMBER:	42663-BCB228
PIN LENGTH: L	.565/14.35
MATING LENGTH: M	.244/6.20
GOLD POINT: G	.100/2.54
PIN HEIGHT: Y	.070/1.78
PC TAIL LENGTH: P	.135/3.43.
TIN: T	.135/3.43
CKTS:	2-36
KINKS:	PER SMES-42003
REMOVED BACKWALLS:	NONE
VOIDED CKTS:	NONE
PACKAGING:	BULK PK-40873-0041

CKTS	MATERIAL NUMBER	ENG NUMBER	CKTS	MATERIAL NUMBER	ENG NUMBER
02	22-28-9024	42377-0352	20	22-28-9204	42377-0370
03	22-28-9034	42377-0353	21	22-28-9214	42377-0371
04	22-28-9044	42377-0354	22	22-28-9224	42377-0372
05	22-28-9054	42377-0355	23	22-28-9234	42377-0373
06	22-28-9064	42377-0356	24	22-28-9244	42377-0374
07	22-28-9074	42377-0357	25	22-28-9254	42377-0375
08	22-28-9084	42377-0358	26	22-28-9264	42377-0376
09	22-28-9094	42377-0359	27	22-28-9274	42377-0377
10	22-28-9104	42377-0360	28	22-28-9284	42377-0378
11	22-28-9114	42377-0361	29	22-28-9294	42377-0379
12	22-28-9124	42377-0362	30	22-28-9304	42377-0380
13	22-28-9134	42377-0363	31	22-28-9314	42377-0381
14	22-28-9144	42377-0364	32	22-28-9324	42377-0382
15	22-28-9154	42377-0365	33	22-28-9334	42377-0383
16	22-28-9164	42377-0366	34	22-28-9344	42377-0384
17	22-28-9174	42377-0367	35	22-28-9354	42377-0385
18	22-28-9184	42377-0368	36	22-28-9364	42377-0386
19	22-28-9194	42377-0369			

✓ A-42377-0387/0421	
HEADER NUMBER:	42312-0036
PIN NUMBER:	42663-BXB228
PIN LENGTH: L	.645/16.38
MATING LENGTH: M	.324/8.23
GOLD POINT: G	.140/3.56
PIN HEIGHT: Y	.070/1.78
PC TAIL LENGTH: P	.135/3.43
TIN: T	.135/3.43
CKTS:	2-36
KINKS:	PER SMES-42003
REMOVED BACKWALLS:	NONE
VOIDED CKTS:	NONE
PACKAGING:	BULK PK-40873-0041

CKTS	MATERIAL NUMBER	ENG NUMBER	CKTS	MATERIAL NUMBER	ENG NUMBER
02	22-28-9025	42377-0387	20	22-28-9205	42377-0405
03	22-28-9035	42377-0388	21	22-28-9215	42377-0406
04	22-28-9045	42377-0389	22	22-28-9225	42377-0407
05	22-28-9055	42377-0390	23	22-28-9235	42377-0408
06	22-28-9065	42377-0391	24	22-28-9245	42377-0409
07	22-28-9075	42377-0392	25	22-28-9255	42377-0410
08	22-28-9085	42377-0393	26	22-28-9265	42377-0411
09	22-28-9095	42377-0394	27	22-28-9275	42377-0412
10	22-28-9105	42377-0395	28	22-28-9285	42377-0413
11	22-28-9115	42377-0396	29	22-28-9295	42377-0414
12	22-28-9125	42377-0397	30	22-28-9305	42377-0415
13	22-28-9135	42377-0398	31	22-28-9315	42377-0416
14	22-28-9145	42377-0399	32	22-28-9325	42377-0417
15	22-28-9155	42377-0400	33	22-28-9335	42377-0418
16	22-28-9165	42377-0401	34	22-28-9345	42377-0419
17	22-28-9175	42377-0402	35	22-28-9355	42377-0420
18	22-28-9185	42377-0403	36	22-28-9365	42377-0421
19	22-28-9195	42377-0404			

REV:	ECM INFORMATION:	TITLE:	SHEET No.
Y2	ECM No: **107985** DATE: **10/25/2024**	**KK 100 HEADER ASSEMBLY** **FLAT RIGHT ANGLE** **BREAKAWAY**	**- 7 -**

DOCUMENT NUMBER:	CREATED / REVISED BY:	CHECKED BY:	APPROVED BY:
SD- 42377-001	**BAPPELDORN**	**MKIPPER**	**FSMITH**

✓ A-42377-0504	
HEADER NUMBER:	42312-0036
PIN NUMBER:	42663-ABA154
PIN LENGTH: L	.455/11.56
MATING LENGTH: M	.149/3.78
GOLD POINT: G	N/A
PIN HEIGHT: Y	.070/1.78
PC TAIL LENGTH: P	.120/3.05
TIN: T	OVERALL
CKTS:	2-36
KINKS:	NONE
REMOVED BACKWALLS:	NONE
VOIDED CKTS:	NONE
PACKAGING:	BULK PK-40873-0041

CKTS	MATERIAL NUMBER	ENG NUMBER	CKTS	MATERIAL NUMBER	ENG NUMBER
02			20		
03			21		
04			22		
05			23		
06			24		
07			25		
08			26		
09			27		
10			28		
11			29		
12			30		
13			31		
14	22-28-9148	A-42377-0504	32		
15			33		
16			34		
17			35		
18			36		
19					

✓ A-42377-0505	
HEADER NUMBER:	42312-0036
PIN NUMBER:	42663-BSA154
PIN LENGTH: L	.640/16.00
MATING LENGTH: M	.324/8.23
GOLD POINT: G	N/A
PIN HEIGHT: Y	.070/1.78
PC TAIL LENGTH: P	.120/3.05
TIN: T	OVERALL
CKTS:	2-36
KINKS:	NONE
REMOVED BACKWALLS:	NONE
VOIDED CKTS:	NONE
PACKAGING:	T&R 22289039-PK

CKTS	MATERIAL NUMBER	ENG NUMBER	CKTS	MATERIAL NUMBER	ENG NUMBER
02			20		
03	22-28-9039	A-42377-0505	21		
04			22		
05			23		
06			24		
07			25		
08			26		
09			27		
10			28		
11			29		
12			30		
13			31		
14			32		
15			33		
16			34		
17			35		
18			36		
19					

REV:	ECM INFORMATION:	TITLE:	SHEET No.
Y2	ECM No: **107985** DATE: **10/25/2024**	**KK 100 HEADER ASSEMBLY** **FLAT RIGHT ANGLE** **BREAKAWAY**	**- 8 -**

DOCUMENT NUMBER:	CREATED / REVISED BY:	CHECKED BY:	APPROVED BY:
SD- 42377-001	**BAPPELDORN**	**MKIPPER**	**FSMITH**

✓ A-42377-0693 / 0726	
HEADER NUMBER:	42312-0036
PIN NUMBER:	42663-BCA154
PIN LENGTH: L	.565/14.35
MATING LENGTH: M	.244/6.20
GOLD POINT: G	N/A
PIN HEIGHT: Y	.070/1.78
PC TAIL LENGTH: P	.135/3.43
TIN: T	OVERALL
CKTS:	3-36
KINKS:	PER SMES-42003
REMOVED BACKWALLS:	NO
VOIDED CKTS:	2
PACKAGING:	BULK PK-40873-0041

CKTS	MATERIAL NUMBER	CKTS	MATERIAL NUMBER
02		20	42377-0710
03	42377-0693	21	42377-0711
04	42377-0694	22	42377-0712
05	42377-0695	23	42377-0713
06	42377-0696	24	42377-0714
07	42377-0697	25	42377-0715
08	42377-0698	26	42377-0716
09	42377-0699	27	42377-0717
10	42377-0700	28	42377-0718
11	42377-0701	29	42377-0719
12	42377-0702	30	42377-0720
13	42377-0703	31	42377-0721
14	42377-0704	32	42377-0727
15	42377-0705	33	42377-0723
16	42377-0706	34	42377-0724
17	42377-0707	35	42377-0725
18	42377-0708	36	42377-0726
19	42377-0709		

✓ A-42377-0779 / 0813	
HEADER NUMBER:	42312-0036
PIN NUMBER:	42663-ANA154
PIN LENGTH: L	.510/12.95
MATING LENGTH: M	.134/3.40
GOLD POINT: G	N/A
PIN HEIGHT: Y	.060/1.52
PC TAIL LENGTH: P	.200/5.08
TIN: T	OVERALL
CKTS:	2-36
KINKS:	NONE
REMOVED BACKWALLS:	NONE
VOIDED CKTS:	NONE
PACKAGING:	BULK PK-40873-0041

CKTS	MATERIAL NUMBER	CKTS	MATERIAL NUMBER
02	42377-0779	20	42377-0797
03	42377-0780	21	42377-0798
04	42377-0781	22	42377-0799
05	42377-0782	23	42377-0800
06	42377-0783	24	42377-0801
07	42377-0784	25	42377-0802
08	42377-0785	26	42377-0803
09	42377-0786	27	42377-0804
10	42377-0787	28	42377-0805
11	42377-0788	29	42377-0806
12	42377-0789	30	42377-0807
13	42377-0790	31	42377-0808
14	42377-0791	32	42377-0809
15	42377-0792	33	42377-0810
16	42377-0793	34	42377-0811
17	42377-0794	35	42377-0812
18	42377-0795	36	42377-0813
19	42377-0796		

REV:	ECM INFORMATION:	TITLE:	SHEET No.
Y2	ECM No: **107985** DATE: **10/25/2024**	**KK 100 HEADER ASSEMBLY FLAT RIGHT ANGLE BREAKAWAY**	**- 9 -**

DOCUMENT NUMBER:	CREATED / REVISED BY:	CHECKED BY:	APPROVED BY:
SD- 42377-001	**BAPPELDORN**	**MKIPPER**	**FSMITH**

✓ A-42377-0864 / 0898	
HEADER NUMBER:	42312-0036
PIN NUMBER:	42663-BXA154
PIN LENGTH: L	.645/16.38
MATING LENGTH: M	.324/8.28
GOLD POINT: G	N/A
PIN HEIGHT: Y	.070/1.78
PC TAIL LENGTH: P	.135/3.43
TIN: T	OVERALL
CKTS:	2-36
KINKS:	NONE
REMOVED BACKWALLS:	NONE
VOIDED CKTS:	NONE
PACKAGING:	BULK PK-40873-0041

CKTS	MATERIAL NUMBER	CKTS	MATERIAL NUMBER
02	42377-0864	20	42377-0882
03	42377-0865	21	42377-0883
04	42377-0866	22	42377-0884
05	42377-0867	23	42377-0885
06	42377-0868	24	42377-0886
07	42377-0869	25	42377-0887
08	42377-0870	26	42377-0888
09	42377-0871	27	42377-0889
10	42377-0872	28	42377-0890
11	42377-0873	29	42377-0891
12	42377-0874	30	42377-0892
13	42377-0875	31	42377-0893
14	42377-0876	32	42377-0894
15	42377-0877	33	42377-0895
16	42377-0878	34	42377-0896
17	42377-0879	35	42377-0897
18	42377-0880	36	42377-0898
19	42377-0881		

✓ A-42377-0899/ 0927	
HEADER NUMBER:	42312-0036
PIN NUMBER:	42663-BXB208
PIN LENGTH: L	.645/16.38
MATING LENGTH: M	.324/8.28
GOLD POINT: G	.140/3.56
PIN HEIGHT: Y	.070/1.78
PC TAIL LENGTH: P	.135/3.43
TIN: T	.135/3.43
CKTS:	8-36
KINKS:	PER SMES-42003
REMOVED BACKWALLS:	NONE
VOIDED CKTS:	2,3,4,6,7,8
PACKAGING:	BULK PK-40873-0041

CKTS	MATERIAL NUMBER	CKTS	MATERIAL NUMBER
02		20	42377-0911
03		21	42377-0912
04		22	42377-0913
05		23	42377-0914
06		24	42377-0915
07		25	42377-0916
08	42377-0899	26	42377-0917
09	42377-0900	27	42377-0918
10	42377-0901	28	42377-0919
11	42377-0902	29	42377-0920
12	42377-0903	30	42377-0921
13	42377-0904	31	42377-0922
14	42377-0905	32	42377-0923
15	42377-0906	33	42377-0924
16	42377-0907	34	42377-0925
17	42377-0908	35	42377-0926
18	42377-0909	36	42377-0927
19	42377-0910		

REV:	ECM INFORMATION:	TITLE:	SHEET No.
Y2	ECM No: **107985** DATE: **10/25/2024**	**KK 100 HEADER ASSEMBLY FLAT RIGHT ANGLE BREAKAWAY**	**- 10 -**

DOCUMENT NUMBER:	CREATED / REVISED BY:	CHECKED BY:	APPROVED BY:
SD- 42377-001	**BAPPELDORN**	**MKIPPER**	**FSMITH**

✓ A-42377-0928 / 0962	
HEADER NUMBER:	42312-0036
PIN NUMBER:	42663-DHB208
PIN LENGTH: L	.800/20.32
MATING LENGTH: M	.317/8.05
GOLD POINT: G	.180/4.57
PIN HEIGHT: Y	.070/1.78
PC TAIL LENGTH: P	.290/7.37
TIN: T	.135/3.43
CKTS:	2-36
KINKS:	NONE
REMOVED BACKWALLS:	NONE
VOIDED CKTS:	NONE
PACKAGING:	BULK PK-40873-0043

CKTS	MATERIAL NUMBER	CKTS	MATERIAL NUMBER
02	42377-0928	20	42377-0946
03	42377-0929	21	42377-0947
04	42377-0930	22	42377-0948
05	42377-0931	23	42377-0949
06	42377-0932	24	42377-0950
07	42377-0933	25	42377-0951
08	42377-0934	26	42377-0952
09	42377-0935	27	42377-0953
10	42377-0936	28	42377-0954
11	42377-0937	29	42377-0955
12	42377-0938	30	42377-0956
13	42377-0939	31	42377-0957
14	42377-0940	32	42377-0958
15	42377-0941	33	42377-0959
16	42377-0942	34	42377-0960
17	42377-0943	35	42377-0961
18	42377-0944	36	42377-0962
19	42377-0945		

✓ A-42377-0963/ 0997	
HEADER NUMBER:	42312-0036
PIN NUMBER:	42663-ABA154
PIN LENGTH: L	.455/11.56
MATING LENGTH: M	.140/3.56
GOLD POINT: G	N/A
PIN HEIGHT: Y	.050/1.27
PC TAIL LENGTH: P	.145/3.68
TIN: T	OVERALL
CKTS:	2-36
KINKS:	NONE
REMOVED BACKWALLS:	NONE
VOIDED CKTS:	NONE
PACKAGING:	BULK PK-40873-0041

CKTS	MATERIAL NUMBER	CKTS	MATERIAL NUMBER
02	42377-0963	20	42377-0981
03	42377-0964	21	42377-0982
04	42377-0965	22	42377-0983
05	42377-0966	23	42377-0984
06	42377-0967	24	42377-0985
07	42377-0968	25	42377-0986
08	42377-0969	26	42377-0987
09	42377-0970	27	42377-0988
10	42377-0971	28	42377-0989
11	42377-0972	29	42377-0990
12	42377-0973	30	42377-0991
13	42377-0974	31	42377-0992
14	42377-0975	32	42377-0993
15	42377-0976	33	42377-0994
16	42377-0977	34	42377-0995
17	42377-0978	35	42377-0996
18	42377-0979	36	42377-0997
19	42377-0980		

REV:	ECM INFORMATION:	TITLE:	SHEET No.
Y2	ECM No: **107985** DATE: **10/25/2024**	**KK 100 HEADER ASSEMBLY FLAT RIGHT ANGLE BREAKAWAY**	**- 11 -**

DOCUMENT NUMBER:	CREATED / REVISED BY:	CHECKED BY:	APPROVED BY:
SD- 42377-001	**BAPPELDORN**	**MKIPPER**	**FSMITH**

✓ A-42377-0998 / 1031	
HEADER NUMBER:	42312-0036
PIN NUMBER:	42663-ABA154
PIN LENGTH: L	.455/11.56
MATING LENGTH: M	.140/3.56
GOLD POINT: G	N/A
PIN HEIGHT: Y	.050/1.27
PC TAIL LENGTH: P	.145/3.68
TIN: T	OVERALL
CKTS:	3-36
KINKS:	NONE
REMOVED BACKWALLS:	NONE
VOIDED CKTS:	3
PACKAGING:	BULK PK-40873-0041

CKTS	MATERIAL NUMBER	CKTS	MATERIAL NUMBER
02		20	42377-1015
03	42377-0998	21	42377-1016
04	42377-0999	22	42377-1017
05	42377-1000	23	42377-1018
06	42377-1001	24	42377-1019
07	42377-1002	25	42377-1020
08	42377-1003	26	42377-1021
09	42377-1004	27	42377-1022
10	42377-1005	28	42377-1023
11	42377-1006	29	42377-1024
12	42377-1007	30	42377-1025
13	42377-1008	31	42377-1026
14	42377-1009	32	42377-1027
15	42377-1010	33	42377-1028
16	42377-1011	34	42377-1029
17	42377-1012	35	42377-1030
18	42377-1013	36	42377-1031
19	42377-1014		

✓ A-42377-1032/ 1066	
HEADER NUMBER:	42312-0036
PIN NUMBER:	42663-BYB208
PIN LENGTH: L	.650/16.51
MATING LENGTH: M	.394/10.01
GOLD POINT: G	.200/5.08
PIN HEIGHT: Y	.050/1.27
PC TAIL LENGTH: P	.089/2.26
TIN: T	.200/5.08
CKTS:	2-36
KINKS:	NONE
REMOVED BACKWALLS:	NONE
VOIDED CKTS:	NONE
PACKAGING:	BULK PK-40873-0041

CKTS	MATERIAL NUMBER	CKTS	MATERIAL NUMBER
02	42377-1032	20	42377-1050
03	42377-1033	21	42377-1051
04	42377-1034	22	42377-1052
05	42377-1035	23	42377-1053
06	42377-1036	24	42377-1054
07	42377-1037	25	42377-1055
08	42377-1038	26	42377-1056
09	42377-1039	27	42377-1057
10	42377-1040	28	42377-1058
11	42377-1041	29	42377-1059
12	42377-1042	30	42377-1060
13	42377-1043	31	42377-1061
14	42377-1044	32	42377-1062
15	42377-1045	33	42377-1063
16	42377-1046	34	42377-1064
17	42377-1047	35	42377-1065
18	42377-1048	36	42377-1066
19	42377-1049		

REV:	ECM INFORMATION:	TITLE:	SHEET No.
Y2	ECM No: **107985** DATE: **10/25/2024**	**KK 100 HEADER ASSEMBLY FLAT RIGHT ANGLE BREAKAWAY**	**- 12 -**

DOCUMENT NUMBER:	CREATED / REVISED BY:	CHECKED BY:	APPROVED BY:
SD- 42377-001	**BAPPELDORN**	**MKIPPER**	**FSMITH**

A-42377-1101/1130	
HEADER NUMBER:	42312-0036
PIN NUMBER:	42663-BSA154
PIN LENGTH: L	.630/16.00
MATING LENGTH: M	.324/8.23
GOLD POINT: G	N/A
PIN HEIGHT: Y	.070/1.78
PC TAIL LENGTH: P	.120/3.05
TIN: T	OVERALL
CKTS:	2-36
KINKS:	NONE
REMOVED BACKWALLS:	NONE
VOIDED CKTS:	7
PACKAGING:	BULK PK-40873-0041

CKTS	MATERIAL NUMBER	CKTS	MATERIAL NUMBER
02		20	42377-1114
03		21	42377-1115
04		22	42377-1116
05		23	42377-1117
06		24	42377-1118
07	42377-1101	25	42377-1119
08	42377-1102	26	42377-1120
09	42377-1103	27	42377-1121
10	42377-1104	28	42377-1122
11	42377-1105	29	42377-1123
12	42377-1106	30	42377-1124
13	42377-1107	31	42377-1125
14	42377-1108	32	42377-1126
15	42377-1109	33	42377-1127
16	42377-1110	34	42377-1128
17	42377-1111	35	42377-1129
18	42377-1112	36	42377-1130
19	42377-1113		

A-42377-1131/1165	
HEADER NUMBER:	42312-0036
PIN NUMBER:	42663-ARB208
PIN LENGTH: L	.520/13.21
MATING LENGTH: M	.230/5.84
GOLD POINT: G	.140/3.56
PIN HEIGHT: Y	.070/1.78
PC TAIL LENGTH: P	.093/2.36
TIN: T	.135/3.43
CKTS:	2-36
KINKS:	NONE
REMOVED BACKWALLS:	NONE
VOIDED CKTS:	NONE
PACKAGING:	BULK PK-40873-0041

CKTS	MATERIAL NUMBER	CKTS	MATERIAL NUMBER
02	42377-1131	20	42377-1149
03	42377-1132	21	42377-1150
04	42377-1133	22	42377-1151
05	42377-1134	23	42377-1152
06	42377-1135	24	42377-1153
07	42377-1136	25	42377-1154
08	42377-1137	26	42377-1155
09	42377-1138	27	42377-1156
10	42377-1139	28	42377-1157
11	42377-1140	29	42377-1158
12	42377-1141	30	42377-1159
13	42377-1142	31	42377-1160
14	42377-1143	32	42377-1161
15	42377-1144	33	42377-1162
16	42377-1145	34	42377-1163
17	42377-1146	35	42377-1164
18	42377-1147	36	42377-1165
19	42377-1148		

REV:	ECM INFORMATION:	TITLE:	SHEET No.
Y2	ECM No: **107985** DATE: **10/25/2024**	**KK 100 HEADER ASSEMBLY** **FLAT RIGHT ANGLE** **BREAKAWAY**	**- 13 -**

DOCUMENT NUMBER:	CREATED / REVISED BY:	CHECKED BY:	APPROVED BY:
SD- 42377-001	**BAPPELDORN**	**MKIPPER**	**FSMITH**

A-42377-1166/1200	
HEADER NUMBER:	42312-0036
PIN NUMBER:	42663-BKA154
PIN LENGTH: L	.600/15.24
MATING LENGTH: M	.320/8.13
GOLD POINT: G	N/A
PIN HEIGHT: Y	.070/1.78
PC TAIL LENGTH: P	.093/2.36
TIN: T	OVERALL
CKTS:	2-36
KINKS:	NONE
REMOVED BACKWALLS:	NONE
VOIDED CKTS:	NONE
PACKAGING:	BULK PK-40873-0041

CKTS	MATERIAL NUMBER	CKTS	MATERIAL NUMBER
02	42377-1166	20	42377-1184
03	42377-1167	21	42377-1185
04	42377-1168	22	42377-1186
05	42377-1169	23	42377-1187
06	42377-1170	24	42377-1188
07	42377-1171	25	42377-1189
08	42377-1172	26	42377-1190
09	42377-1173	27	42377-1191
10	42377-1174	28	42377-1192
11	42377-1175	29	42377-1193
12	42377-1176	30	42377-1194
13	42377-1177	31	42377-1195
14	42377-1178	32	42377-1196
15	42377-1179	33	42377-1197
16	42377-1180	34	42377-1198
17	42377-1181	35	42377-1199
18	42377-1182	36	42377-1200
19	42377-1183		

A-42377-1201/1234	
HEADER NUMBER:	42312-0036
PIN NUMBER:	42663-BKA154
PIN LENGTH: L	.600/15.24
MATING LENGTH: M	.320/8.13
GOLD POINT: G	N/A
PIN HEIGHT: Y	.070/1.78
PC TAIL LENGTH: P	.093/2.36
TIN: T	OVERALL
CKTS:	3-36
KINKS:	NONE
REMOVED BACKWALLS:	NONE
VOIDED CKTS:	2
PACKAGING:	BULK PK-40873-0041

CKTS	MATERIAL NUMBER	CKTS	MATERIAL NUMBER
02		20	42377-1218
03	42377-1201	21	42377-1219
04	42377-1202	22	42377-1220
05	42377-1203	23	42377-1221
06	42377-1204	24	42377-1222
07	42377-1205	25	42377-1223
08	42377-1206	26	42377-1224
09	42377-1207	27	42377-1225
10	42377-1208	28	42377-1226
11	42377-1209	29	42377-1227
12	42377-1210	30	42377-1228
13	42377-1211	31	42377-1229
14	42377-1212	32	42377-1230
15	42377-1213	33	42377-1231
16	42377-1214	34	42377-1232
17	42377-1215	35	42377-1233
18	42377-1216	36	42377-1234
19	42377-1217		

REV:	ECM INFORMATION:	TITLE:	SHEET No.
Y2	ECM No: **107985** DATE: **10/25/2024**	**KK 100 HEADER ASSEMBLY FLAT RIGHT ANGLE BREAKAWAY**	**- 14 -**

DOCUMENT NUMBER:	CREATED / REVISED BY:	CHECKED BY:	APPROVED BY:
SD- 42377-001	**BAPPELDORN**	**MKIPPER**	**FSMITH**

A-42377-1067/1100	
HEADER NUMBER:	42312-0036
PIN NUMBER:	42663-ATB208
PIN LENGTH: L	.530 / 13.46
MATING LENGTH: M	.244 / 6.20
GOLD POINT: G	.140 / 3.56
PIN HEIGHT: Y	.050 / 1.27
PC TAIL LENGTH: P	.120 / 3.05
TIN: T	.135 / 3.43
CKTS:	3-36
KINKS:	NONE
REMOVED BACKWALLS:	NONE
VOIDED CKTS:	3
PACKAGING:	BULK PK-40873-0041

CKTS	MATERIAL NUMBER	CKTS	MATERIAL NUMBER
02		20	
03		21	
04		22	
05		23	
06		24	
07		25	
08		26	
09		27	
10		28	
11	42377-1075	29	
12		30	
13		31	
14		32	
15		33	
16		34	
17		35	
18		36	
19			

A-42377-1235/1269	
HEADER NUMBER:	42312-0036
PIN NUMBER:	42663-BXB228
PIN LENGTH: L	.645/16.48
MATING LENGTH: M	.324/8.23
GOLD POINT: G	.140/3.56
PIN HEIGHT: Y	.070/1.78
PC TAIL LENGTH: P	.135/3.43
TIN: T	.135/3.43
CKTS:	2-36
KINKS:	NONE
REMOVED BACKWALLS:	NONE
VOIDED CKTS:	NONE
PACKAGING:	BULK PK-40873-0041

CKTS	MATERIAL NUMBER	CKTS	MATERIAL NUMBER
02	42377-1235	20	
03		21	
04		22	
05		23	
06		24	
07		25	
08		26	
09		27	
10		28	
11		29	
12		30	
13		31	
14		32	
15		33	
16		34	
17		35	
18		36	
19			

REV:	ECM INFORMATION:	TITLE:	SHEET No.
Y2	ECM No: **107985** DATE: **10/25/2024**	**KK 100 HEADER ASSEMBLY FLAT RIGHT ANGLE BREAKAWAY**	**- 15 -**

DOCUMENT NUMBER:	CREATED / REVISED BY:	CHECKED BY:	APPROVED BY:
SD- 42377-001	**BAPPELDORN**	**MKIPPER**	**FSMITH**

A-42377-1270 / 1304	
HEADER NUMBER:	42312-0036
PIN NUMBER:	42663-BHA154
PIN LENGTH: L	.590 / 14.99
MATING LENGTH: M	.343 / 8.71
GOLD POINT: G	N/A
PIN HEIGHT: Y	.070 / 1.78
PC TAIL LENGTH: P	**.055 +/- .025** **1.40 +/- 0.64**
TIN: T	OVERALL
CKTS:	2-36
KINKS:	NONE
REMOVED BACKWALLS:	NONE
VOIDED CKTS:	2
PACKAGING:	BULK PK-40873-0041

CKTS	MATERIAL NUMBER	CKTS	MATERIAL NUMBER
02		20	
03	42377-1271	21	
04		22	
05		23	
06		24	
07		25	
08		26	
09		27	
10		28	
11		29	
12		30	
13		31	
14		32	
15		33	
16		34	
17		35	
18		36	
19			

✓ A-42377-1305/1339	
HEADER NUMBER:	42312-0036
PIN NUMBER:	42663-BYA154
PIN LENGTH: L	.650/16.51
MATING LENGTH: M	.394/10.01
GOLD POINT: G	N/A
PIN HEIGHT: Y	.050/1.27
PC TAIL LENGTH: P	.089/2.26
TIN: T	OVERALL
CKTS:	2-36
KINKS:	NONE
REMOVED BACKWALLS:	NONE
VOIDED CKTS:	NONE
PACKAGING:	BULK PK-40873-0041

CKTS	MATERIAL NUMBER	CKTS	MATERIAL NUMBER
02	42377-1305	20	
03		21	
04		22	
05		23	
06	42377-1309	24	
07		25	
08		26	
09		27	
10		28	
11		29	
12		30	
13		31	
14		32	
15		33	
16		34	
17		35	
18		36	
19			

REV:	ECM INFORMATION:	TITLE:	SHEET No.
Y2	ECM No: **107985** DATE: **10/25/2024**	**KK 100 HEADER ASSEMBLY** **FLAT RIGHT ANGLE** **BREAKAWAY**	**- 16 -**

DOCUMENT NUMBER:	CREATED / REVISED BY:	CHECKED BY:	APPROVED BY:
SD- 42377-001	**BAPPELDORN**	**MKIPPER**	**FSMITH**

✓ A-42377-1340/1358	
HEADER NUMBER:	42312-0036
PIN NUMBER:	42663-AFB208
PIN LENGTH: L	.475/12.07
MATING LENGTH: M	.195/4.95
GOLD POINT: G	.150/3.81
PIN HEIGHT: Y	.058/1.47
PC TAIL LENGTH: P	.093/2.36
TIN: T	.100/2.54
CKTS:	18-36
KINKS:	NONE
REMOVED BACKWALLS:	NONE
VOIDED CKTS:	2, 4, 5, 6, 7, 9, 11, 12, 13, 14, 16, 18
PACKAGING:	BULK PK-40873-0041

CKTS	MATERIAL NUMBER	CKTS	MATERIAL NUMBER
		20	
		21	
		22	
		23	
		24	
		25	
		26	
		27	
		28	
		29	
		30	
		31	
		32	
		33	
		34	
		35	
18		36	
19	42377-1341		

✓ A-42377-1359/1393	
HEADER NUMBER:	42312-0036
PIN NUMBER:	42663-CJA154
PIN LENGTH: L	.700 / 17.78
MATING LENGTH: M	.394/10.01
GOLD POINT: G	N/A
PIN HEIGHT: Y	.050/1.27
PC TAIL LENGTH: P	.135 / 3.43
TIN: T	OVERALL
CKTS:	2-36
KINKS:	PER SMES-42003
REMOVED BACKWALLS:	NONE
VOIDED CKTS:	NONE
PACKAGING:	BULK PK-40873-0041

CKTS	MATERIAL NUMBER	CKTS	MATERIAL NUMBER
02	42377-1359	20	
03		21	
04		22	
05		23	
06	42377-1363	24	
07		25	
08		26	
09		27	
10		28	
11		29	
12		30	
13		31	
14		32	
15		33	
16		34	
17		35	
18		36	
19			

REV:	ECM INFORMATION:	TITLE:	SHEET No.
Y2	ECM No: **107985** DATE: **10/25/2024**	**KK 100 HEADER ASSEMBLY FLAT RIGHT ANGLE BREAKAWAY**	**- 17 -**

DOCUMENT NUMBER:	CREATED / REVISED BY:	CHECKED BY:	APPROVED BY:
SD- 42377-001	**BAPPELDORN**	**MKIPPER**	**FSMITH**

✓ A-42377-1394/1428	
HEADER NUMBER:	42312-0036
PIN NUMBER:	42663-CJA154
PIN LENGTH: L	.700 / 17.78
MATING LENGTH: M	.394/10.01
GOLD POINT: G	N/A
PIN HEIGHT: Y	.050/1.27
PC TAIL LENGTH: P	.135 / 3.43
TIN: T	OVERALL
CKTS:	2-36
KINKS:	NONE
REMOVED BACKWALLS:	NONE
VOIDED CKTS:	NONE
PACKAGING:	BULK PK-40873-0041

CKTS	MATERIAL NUMBER	CKTS	MATERIAL NUMBER
02	42377-1394	20	
03		21	
04		22	
05		23	
06		24	
07		25	
08		26	
09		27	
10		28	
11		29	
12		30	
13		31	
14		32	
15		33	
16		34	
17		35	
18		36	
19			

✓ A-42377-1429	
HEADER NUMBER:	42312-0036
PIN NUMBER:	42663-ECA154
PIN LENGTH: L	.880 / 22.35
MATING LENGTH: M	.600/15.24
GOLD POINT: G	N/A
PIN HEIGHT: Y	.050/1.27
PC TAIL LENGTH: P	.116 / 2.95
TIN: T	OVERALL
CKTS:	5-36
KINKS:	NONE
REMOVED BACKWALLS:	NONE
VOIDED CKTS:	2,3,4
PACKAGING:	BULK PK-40873-0041

CKTS	MATERIAL NUMBER	CKTS	MATERIAL NUMBER
		20	
		21	
		22	
05	42377-1429	23	
06		24	
07		25	
08		26	
09		27	
10		28	
11		29	
12		30	
13		31	
14		32	
15		33	
16		34	
17		35	
18		36	
19			

REV:	ECM INFORMATION:	TITLE:	SHEET No.
Y2	ECM No: **107985** DATE: **10/25/2024**	**KK 100 HEADER ASSEMBLY FLAT RIGHT ANGLE BREAKAWAY**	**- 18 -**

DOCUMENT NUMBER:	CREATED / REVISED BY:	CHECKED BY:	APPROVED BY:
SD- 42377-001	**BAPPELDORN**	**MKIPPER**	**FSMITH**