MATERIALS AND FINISHES

BODY, CAP: BRASS
PLATED GOLD

CENTER CONTACT: BRASS
PLATED GOLD

INSULATOR: TEFLON

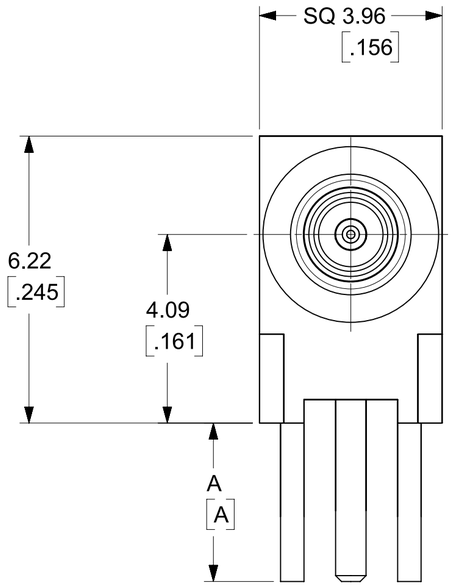

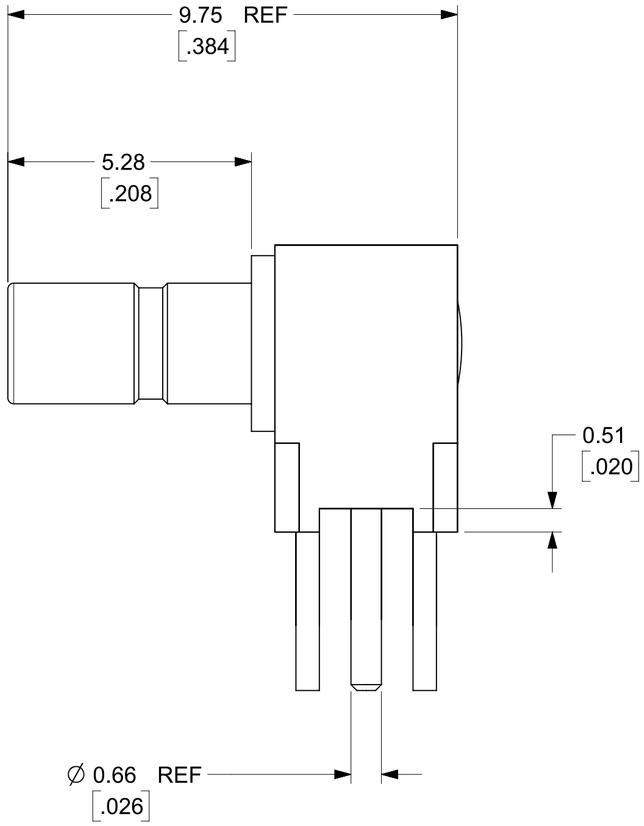

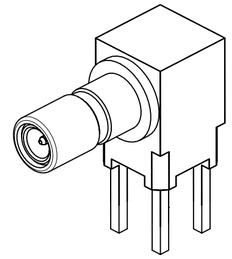

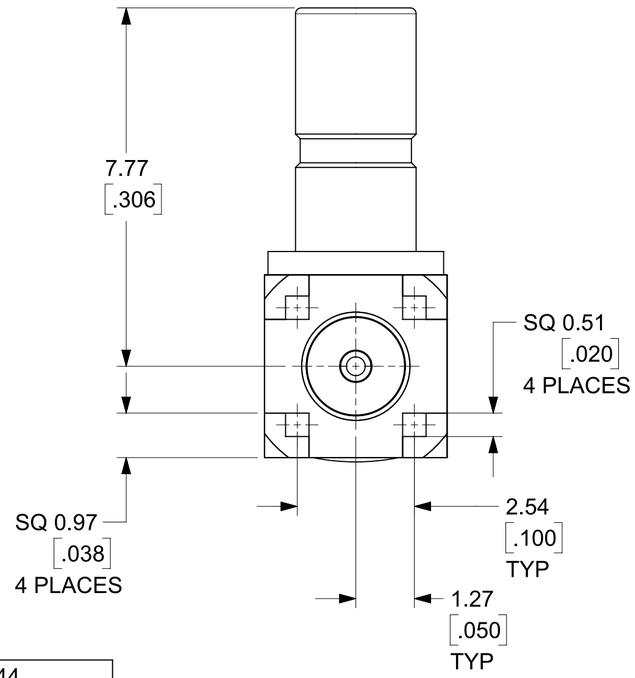

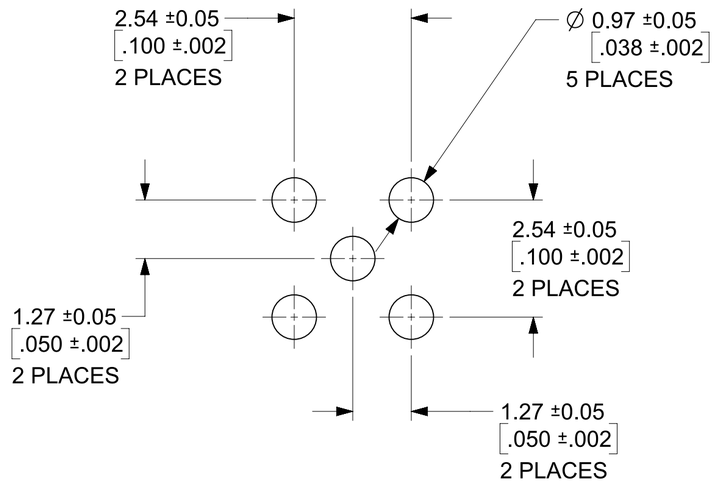

PCB HOLE PATTERN

73328-0030
IS THE SAME AS
73397-6090
EXCEPT PLATING

73328-0030	.135	3.44
PART NO.	IN	MM
	A	

MIL-STD-348A, FIG. 320.1	INTERFACE
SPECIFICATION	DESCRIPTION

THIS DRAWING CONTAINS INFORMATION THAT IS PROPRIETARY TO MOLEX ELECTRONIC TECHNOLOGIES, LLC AND SHOULD NOT BE USED WITHOUT WRITTEN PERMISSION

DIMENSION UNITS	SCALE
MM/IN	NTS

GENERAL TOLERANCES (UNLESS SPECIFIED)

	MM	INCH
4 PLACES	±	±
3 PLACES	±	±
2 PLACES	±	±
1 PLACE	±	±
0 PLACES	±	±
ANGULAR TOL	±	2°

DRAFT WHERE APPLICABLE MUST REMAIN WITHIN DIMENSIONS

CURRENT REV DESC: REMOVED OBSOLETED PART NUMBERS AS PER PCN#515988

STATUS: Production
DRWN: Sampreet S Mirajkar 2025-11-19
CHK'D: Ganesh Rao B 2025-12-24
APPR: Gurunandan GA 2025-12-24

INITIAL REVISION:
DRWN: TEF 2004/02/25
APPR: GMH 2004/02/25

THIRD ANGLE PROJECTION

DRAWING	SERIES
C-SIZE	73328

molex

SSMB JACK R/A PCB
50 OHMS, EWR-2093

PRODUCT CUSTOMER DRAWING

DOCUMENT NUMBER	DOC TYPE	DOC PART	REVISION
SD-73328-003	PSD	001	D

MATERIAL NUMBER	CUSTOMER	SHEET NUMBER
SEE TABLE	GENERAL MARKET	1 OF 1

FORMAT: Engdega-TC-tb-prod-C
REVISION: B
DATE: 2023/10/23