MATERIALS AND FINISHES:

BODY: BRASS
PLATED GOLD
SEE TABLE FOR THICKNESS

CENTER CONTACT: BRASS
PLATED GOLD

INSULATOR: PTFE

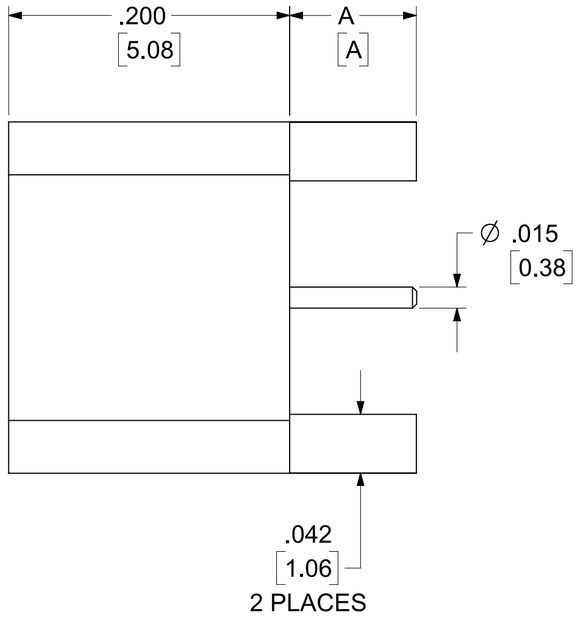

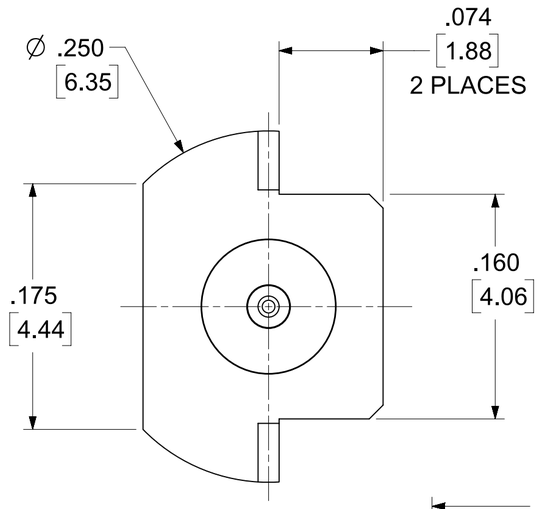

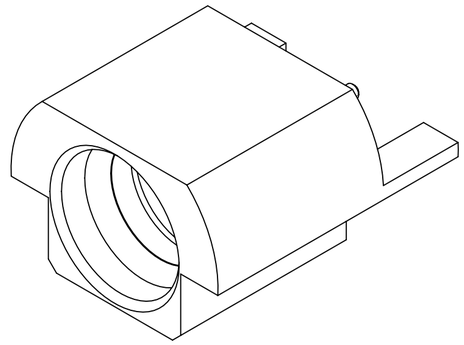

LABEL FORMAT FOR
0734153597

PART NUMBER: 0734153594
ORDER NUMBER: 0734153597
MOLEX
DATE: YYWW

LABEL FORMAT FOR
0734153595

PART NUMBER: 0734153591
ORDER NUMBER: 0734153595
MOLEX
DATE: YYWW

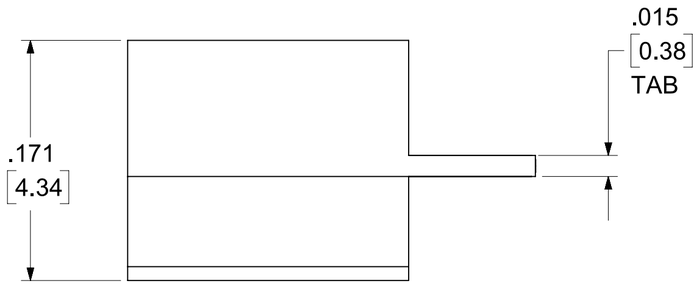

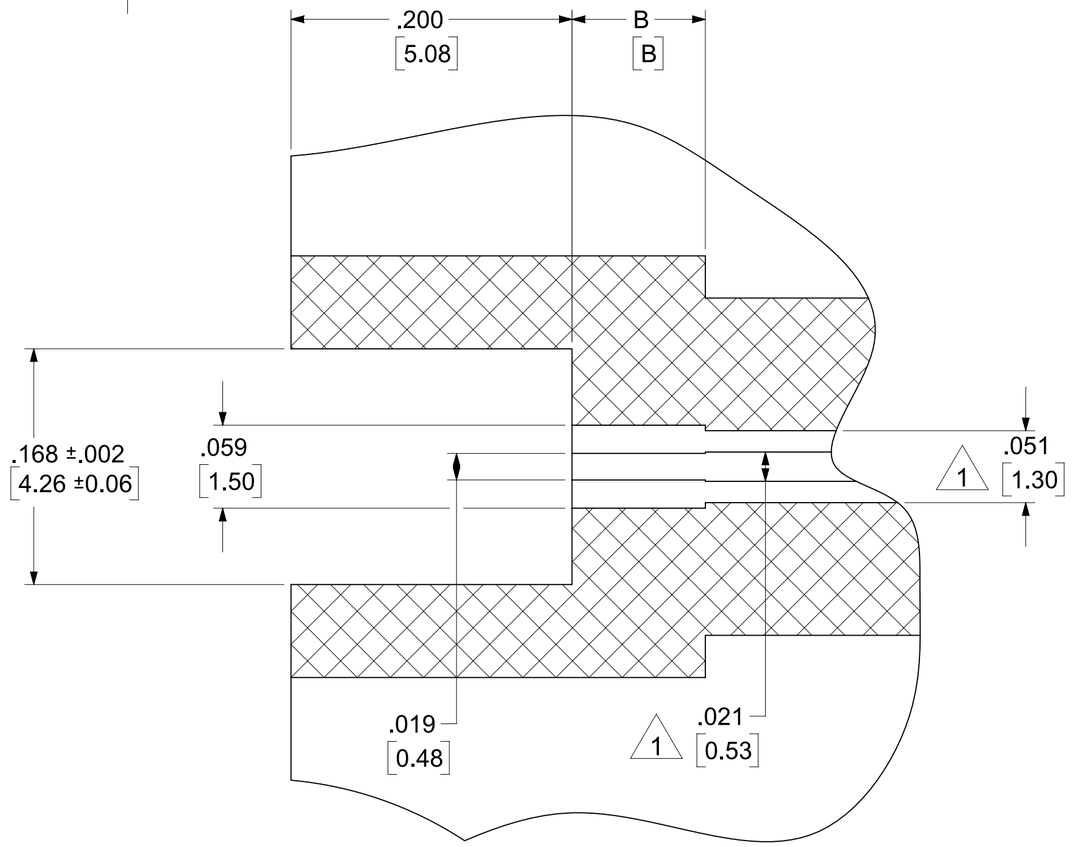

RECOMMENDED PCB LAYOUT

1 DIMENSIONS APPLICATION FOR ROGERS 4350 PCB MATERIAL ONLY

0734153598	.090 REF	2.29 REF	.095	2.41	10 u" GOLD	0734153590 TAPE AND REEL	SEE SHEETS 2 & 3
0734153597	.090 REF	2.29 REF	.095	2.41	30 u" GOLD	0734153594 ONE PER BAG	895420470
0734153596	.050 REF	1.27 REF	.055	1.40	10 u" GOLD	0734153591 TAPE AND REEL	SEE SHEETS 2 & 3
0734153595						0734153591 ONE PER BAG	895420088
0734153594	.090 REF	2.29 REF	.095	2.41	30 u" GOLD	0734153594 TRAY	895420040
0734153593	.050 REF	1.27 REF	.055	1.40	10 u" GOLD	0734153591 SMALL TRAY	895420060
0734153592	.090 REF	2.29 REF	.095	2.41		0734153590 SMALL TRAY	
0734153591	.050 REF	1.27 REF	.055	1.40		0734153591 TRAY	895420040
0734153590	.090 REF	2.29 REF	.095	2.41		0734153590 TRAY	
PART NO.	IN	MM	IN	MM	BODY PLATING	DESCRIPTION	PACKING SPEC
	DIM A		DIM B				

PS-89675-3320	PRODUCT SPECIFICATION
MIL-STD-348A, FIG. 326-3	INTERFACE
SPECIFICATION	DESCRIPTION

THIS DRAWING CONTAINS INFORMATION THAT IS PROPRIETARY TO MOLEX ELECTRONIC TECHNOLOGIES, LLC AND SHOULD NOT BE USED WITHOUT WRITTEN PERMISSION

FUNCTIONAL SYMBOLS
FA = 0
FC = 0
FP = 0
DIVISIONAL SYMBOLS

DIMENSION UNITS: INCH/MM
SCALE: NTS
GENERAL TOLERANCES (UNLESS SPECIFIED)
ANGULAR TOL ± 2°
4 PLACES ±
3 PLACES ±
2 PLACES ±
1 PLACE ±
0 PLACES ±
DRAFT WHERE APPLICABLE MUST REMAIN WITHIN DIMENSIONS

CURRENT REV DESC: ADD P/N 0734153598 FOR TAPE & REEL OPTION FOR 0734153590

STATUS: Production
DRWN: Les Meier 2025-10-21
CHK'D: Jason Deren 2025-10-23
APPR: Kevin Tagan 2025-10-23

THIRD ANGLE PROJECTION
DRAWING: C-SIZE
SERIES: 73415

molex

SMP PLUG, PCB EDGE MOUNT 50 OHMS
LIMITED DETENT EWR-17451

PRODUCT CUSTOMER DRAWING

DOCUMENT NUMBER	DOC TYPE	DOC PART	REVISION
SD-73415-359	PSD	001	A10

MATERIAL NUMBER	CUSTOMER	SHEET NUMBER
SEE TABLE	GENERAL MARKET	1 OF 3

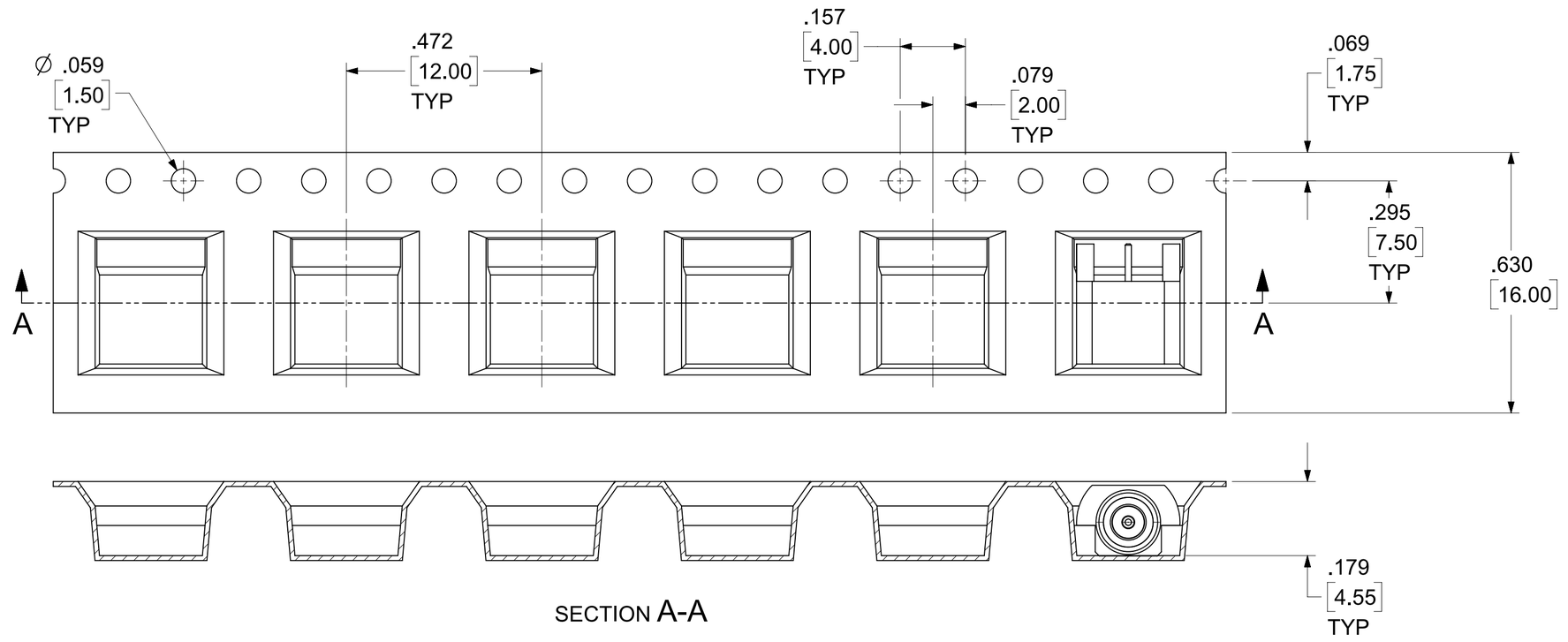

SECTION A-A

VIEWS FOR 0734153596

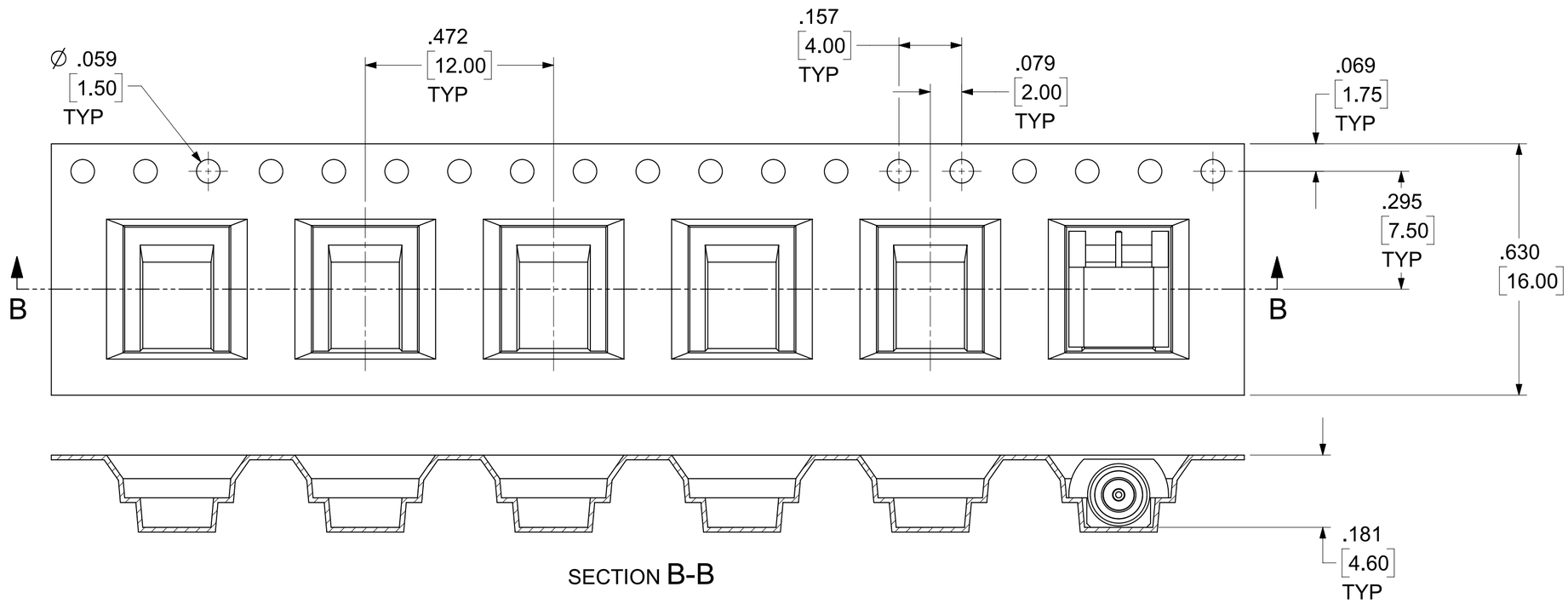

SECTION B-B

VIEWS FOR 0734153598

FUNCTIONAL SYMBOLS: FA = 0; FC = 0; FP = 0	THIS DRAWING CONTAINS INFORMATION THAT IS PROPRIETARY TO MOLEX ELECTRONIC TECHNOLOGIES, LLC AND SHOULD NOT BE USED WITHOUT WRITTEN PERMISSION				
DIVISIONAL SYMBOLS	DIMENSION UNITS: INCH/MM; SCALE: NTS	CURRENT REV DESC: ADD P/N 0734153598 FOR TAPE & REEL OPTION FOR 0734153590	molex		
	GENERAL TOLERANCES (UNLESS SPECIFIED): ANGULAR TOL ± 2°; 4 PLACES ±; 3 PLACES ±; 2 PLACES ±; 1 PLACE ±; 0 PLACES ±	STATUS: Production DRWN: Les Meier 2025-10-21 CHK'D: Jason Deren 2025-10-23 APPR: Kevin Tagan 2025-10-23	SMP PLUG, PCB EDGE MOUNT 50 OHMS LIMITED DETENT EWR-17451 PRODUCT CUSTOMER DRAWING		
	DRAFT WHERE APPLICABLE MUST REMAIN WITHIN DIMENSIONS	THIRD ANGLE PROJECTION	DRAWING: C-SIZE	SERIES: 73415	MATERIAL NUMBER: SEE TABLE; CUSTOMER: GENERAL MARKET; SHEET NUMBER: 2 OF 3

DOCUMENT NUMBER	DOC TYPE	DOC PART	REVISION
SD-73415-359	PSD	001	A10

FORMAT: TC-tb-prod-C
REVISION: B
DATE: 2022/08/01

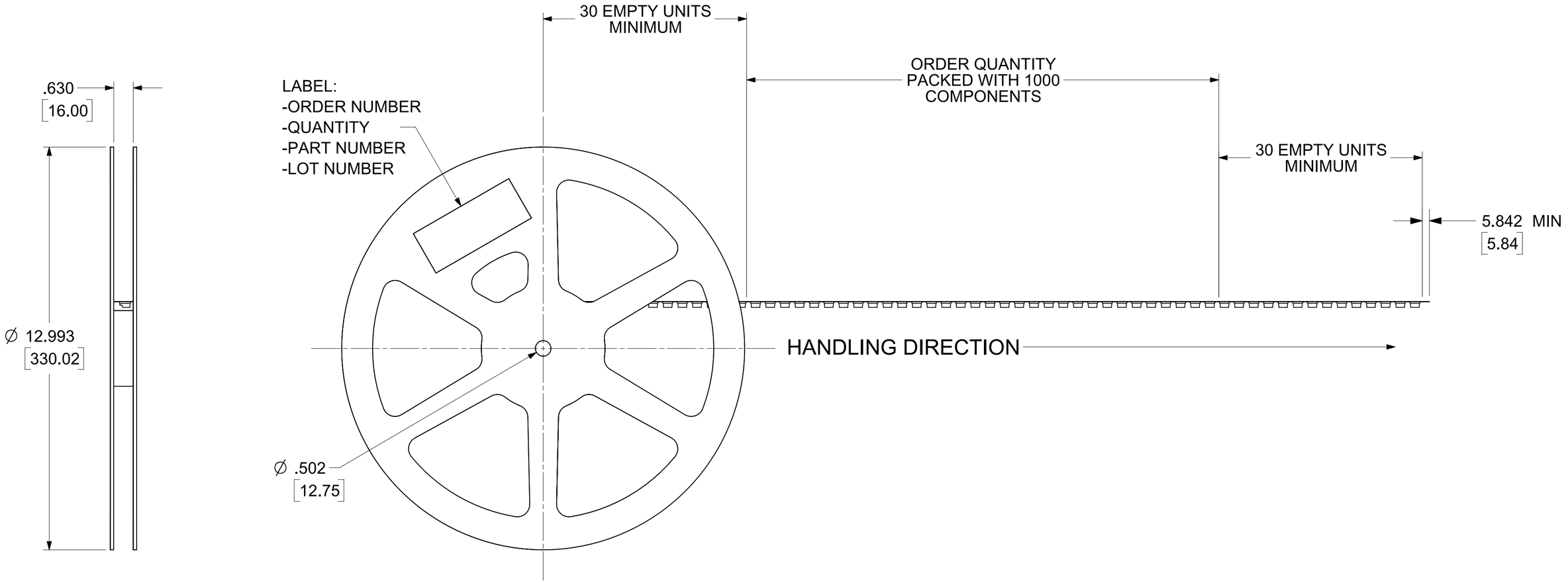

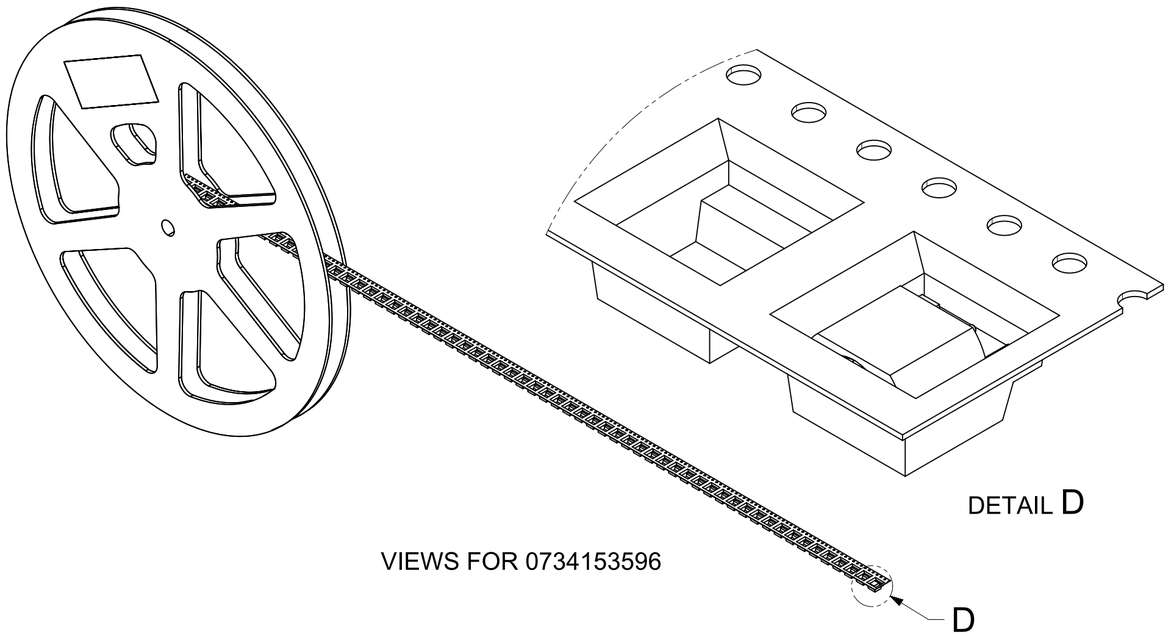

VIEWS FOR 0734153596

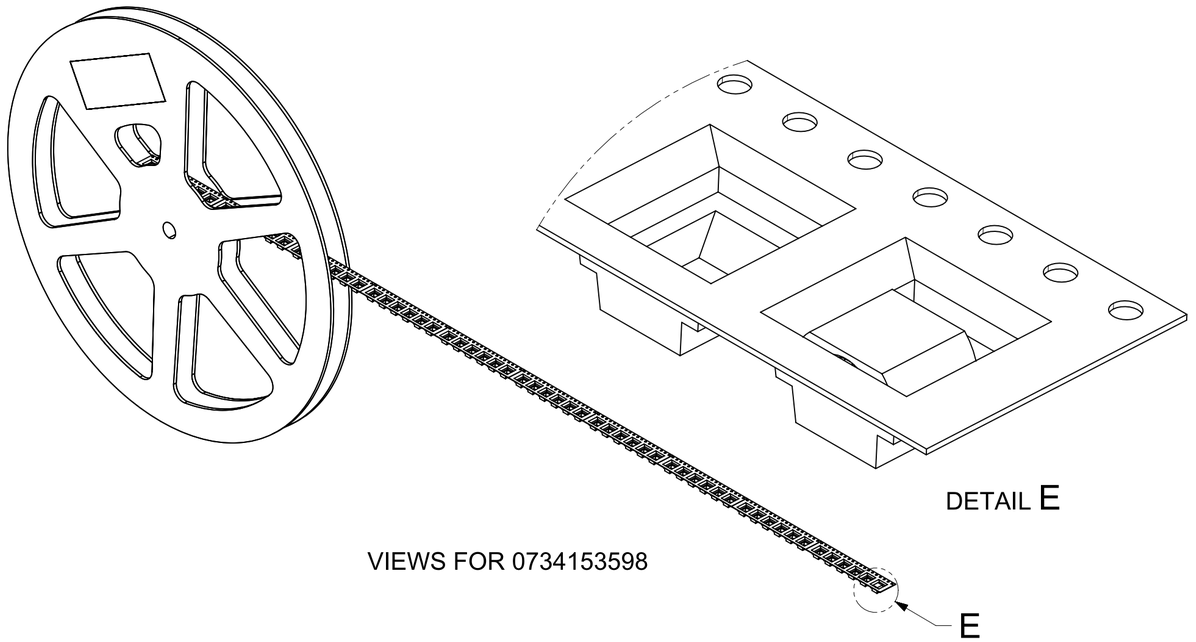

VIEWS FOR 0734153598

FUNCTIONAL SYMBOLS	THIS DRAWING CONTAINS INFORMATION THAT IS PROPRIETARY TO MOLEX ELECTRONIC TECHNOLOGIES, LLC AND SHOULD NOT BE USED WITHOUT WRITTEN PERMISSION				
FA = 0	DIMENSION UNITS: INCH/MM	SCALE: NTS	CURRENT REV DESC: ADD P/N 0734153598 FOR TAPE & REEL OPTION FOR 0734153590	molex	
FC = 0	GENERAL TOLERANCES (UNLESS SPECIFIED)			SMP PLUG, PCB EDGE MOUNT 50 OHMS LIMITED DETENT EWR-17451	
FP = 0	ANGULAR TOL ± 2°				
	4 PLACES ±			PRODUCT CUSTOMER DRAWING	
DIVISIONAL SYMBOLS	3 PLACES ±		STATUS: Production		
	2 PLACES ±		DRWN: Les Meier 2025-10-21	DOCUMENT NUMBER: SD-73415-359	DOC TYPE: PSD / DOC PART: 001 / REVISION: A10
	1 PLACE ±		CHK'D: Jason Deren 2025-10-23		
	0 PLACES ±		APPR: Kevin Tagan 2025-10-23		
	DRAFT WHERE APPLICABLE MUST REMAIN WITHIN DIMENSIONS		THIRD ANGLE PROJECTION / DRAWING: C-SIZE / SERIES: 73415	MATERIAL NUMBER: SEE TABLE / CUSTOMER: GENERAL MARKET	SHEET NUMBER: 3 OF 3

FORMAT: TC-db-prod-C
REVISION: B
DATE: 2022/08/01