NOTES

1. 材料及び仕上げ(めっき仕様) : TABLE 1 参照
   MATERIAL AND FINISHES : SEE TABLE 1
2. 製品仕様書 : 2059790000-PS 000
   PRODUCT SPECIFICATION:2059790000-PS 000
3. 梱包形態 : SHEET 4 参照
   PACKAGING INFORMATION : SEE SHEET 4
4. 嵌合相手　　: 205979(ISLタイプ),212724(TPAタイプ) シリーズ
   MATES WITH:205979(ISL TYPE),212724(TPA TYPE) SERIES
5. アプリケーション仕様書
   (コネクタ取扱い説明書) : 2059790000-AS 000
   APPLICATION SPECIFICATION
   (CONNECTOR MANUAL):2059790000-AS 000
6. 端子テール部及びネイルの平坦度:0.1 MAX
   TAIL AND NAIL COPLANARITY TO BE 0.1 MAX
7. 偶数極に適用。
   APPLY FOR EVEN CIRCUIT.
8. 端子テール部及びネイルに錫ビスマスめっきを使用している為、
   外観に摺動痕が付く場合があります。
   THE WOUND OF FRICTION MIGHT ADHERE TO
   EXTERNALS BECAUSE THE TIN BISMUTH PLATING IS
   USED FOR THE TAIL AND NAIL.
9. 本製品のプラスチック部に黒点・白点等が確認される場合や
   色合いが異なる場合がありますが、製品性能に影響はありません。
   THERE IS NO INFLUENCE IN THE PRODUCT
   PERFORMANCE THOUGH THE BLACK AND WHITE SPOT ETC.
   MIGHT BE CONFIRMED TO THE PLASTIC PART OF
   THIS PRODUCT AND THE SHADE MIGHT BE DIFFERENT.
10. この製品は205971のGlow Wire適合バージョンです。
    THIS PRODUCT IS A GLOW WIRE COMPLIANT VERSION OF 205971.
11. この製品はポッティング可能製品です。
    THIS PRODUCT ALLOWS TO BE POTTING.

TABLE 1

番号 No.	部品 PART	材質 MATERIAL
①	ハウジング HOUSING	ポリアミド(PA), UL94V-0, 色 : SEE CHART POLYAMIDE(PA), UL94V-0, COLOR : SEE CHART
②	ターミナル TERMINAL	黄銅 BRASS
		錫ビスマスめっき : 1.0 micro-meter MIN TIN BISMUTH PLATING(TAIL AREA,CONTACT AREA)
		ニッケルめっき(下地): 1.0 micro-meter MIN NICKEL(UNDER PLATING)
③	ネイル NAIL	黄銅 BRASS
		錫めっき　: 1.0 micro-meter MIN MATTE TIN PLATING
		ニッケルめっき(下地): 1.0 micro-meter MIN NICKEL(UNDER PLATING)

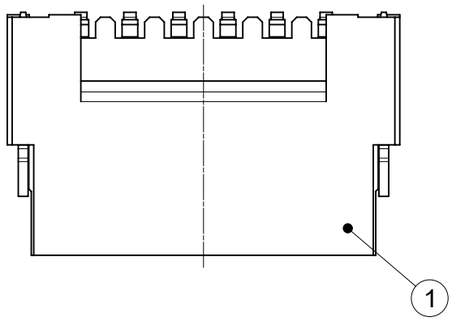

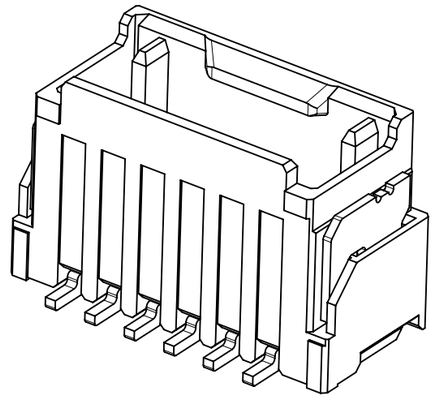

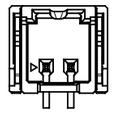

VIEW OF
2-3 CIRCUIT

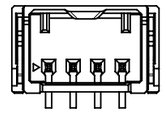

VIEW OF
4-6 CIRCUIT

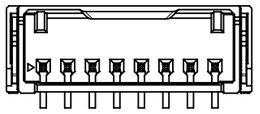

VIEW OF
7-8 CIRCUIT

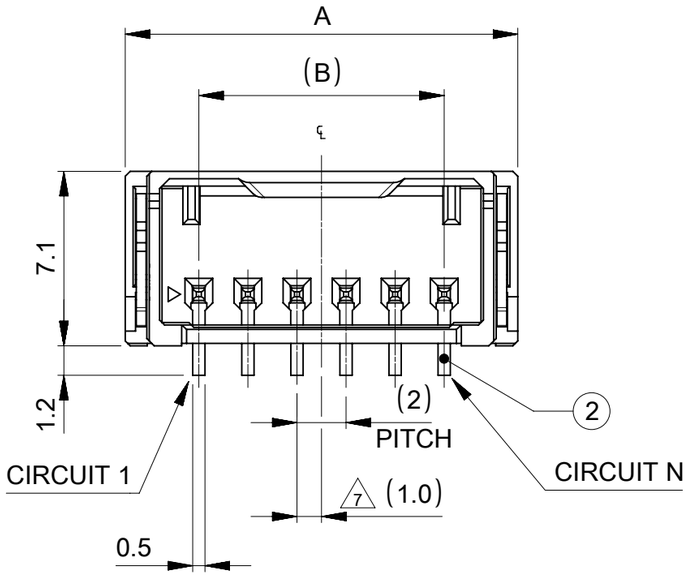

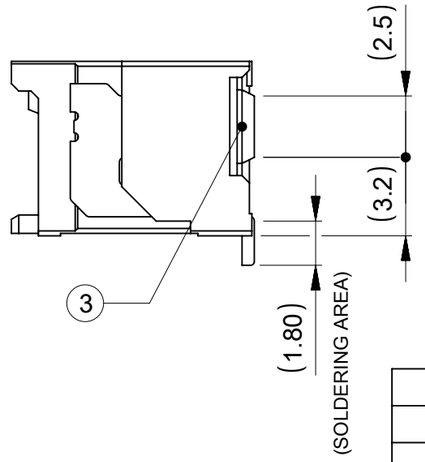

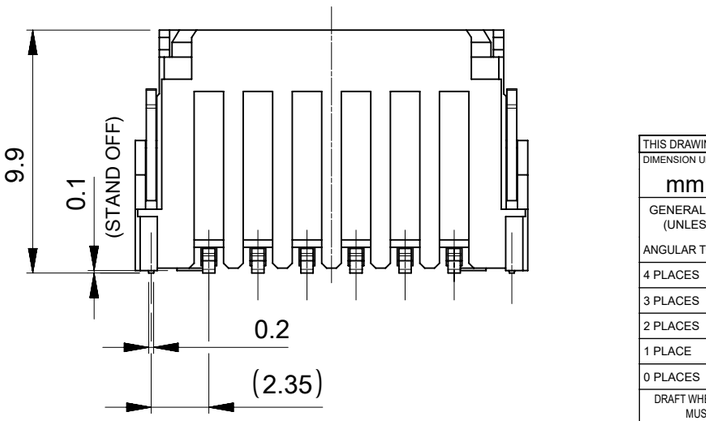

14	20	8
12	18	7
10	16	6
8	14	5
6	12	4
4	10	3
2	8	2
B	A	極数 CIRCUIT SIZE

THIS DRAWING CONTAINS INFORMATION THAT IS PROPRIETARY TO MOLEX ELECTRONIC TECHNOLOGIES, LLC AND SHOULD NOT BE USED WITHOUT WRITTEN PERMISSION

DIMENSION UNITS	SCALE
mm	NTS

GENERAL TOLERANCES (UNLESS SPECIFIED)

ANGULAR TOL	±	3.0 °
4 PLACES	±	0.2
3 PLACES	±	0.2
2 PLACES	±	0.2
1 PLACE	±	0.2
0 PLACES	±	0.2

DRAFT WHERE APPLICABLE MUST REMAIN WITHIN DIMENSIONS

CURRENT REV DESC: REMOVED OBSOLETED PART NUMBER AS PER PCN#517153

EC NO: 834848

DRWN:	PONNAM	2025/08/29
CHK'D:	GGA	2025/09/22
APPR:	GGA	2025/09/22

INITIAL REVISION:

DRWN:	KYAMADA02	2020/12/04
APPR:	SAKIYAMA	2020/12/15

THIRD ANGLE PROJECTION

DRAWING: A3-SIZE

SERIES: 217063

molex

MICRO-ONE 2.0W/B GLOW WIRE TYPE
HEADER ASSEMBLY VERTICAL

PRODUCT CUSTOMER DRAWING

DOCUMENT NUMBER	DOC TYPE	DOC PART	REVISION
2170630000-SD	PSD	000	C1

MATERIAL NUMBER	CUSTOMER	SHEET NUMBER
SEE TABLE	GENERAL	1 OF 5

DOCUMENT STATUS	P1	RELEASE DATE	2025/09/22 11:13:46

FORMAT: master-tb-prod-A3
REVISION: J1
DATE: 2021/05/01

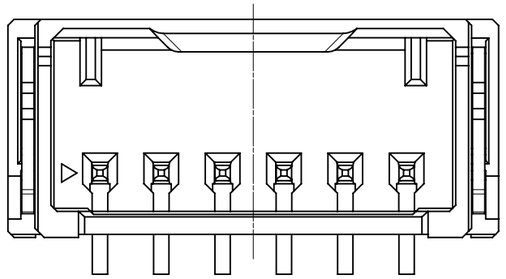

製品レイアウト
PRODUCT LAYOUT

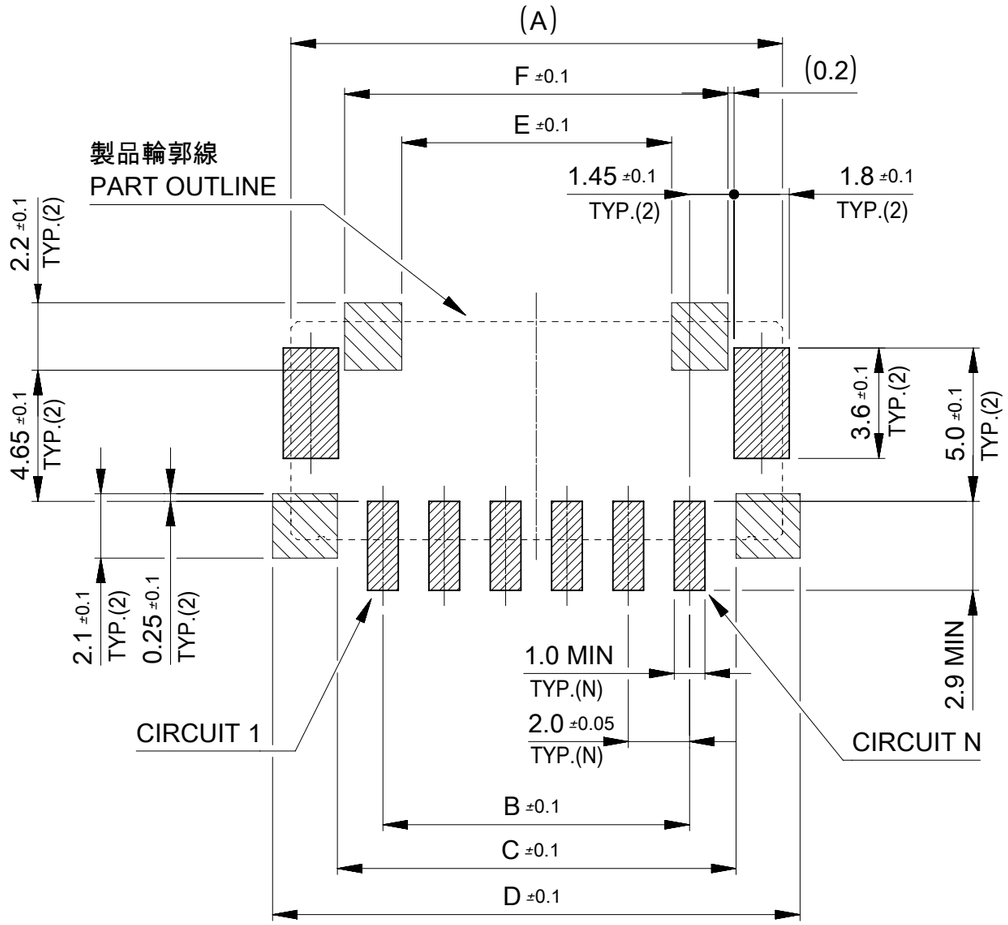

推奨基板レイアウト:実装面側
（参考：基板厚1.6mm, メタルマスク厚0.15mm, マスク開口率100%）
SUGGESTED PCB LAYOUT : COMPONENT SIDE
(REFERENCE: PCB THICKNESS 1.6mm, STENCIL THICKNESS 0.15mm,
APERTURE RATIO 100%)

:パターン禁止エリア
RESTRICTED AREA
NO PCB COMPONENTS ALLOWED

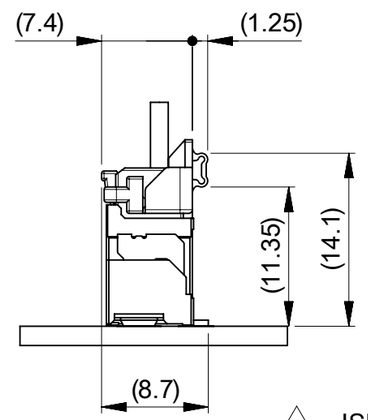

△4 ISLタイプ嵌合図
MATED CONNECTOR OF ISL TYPE

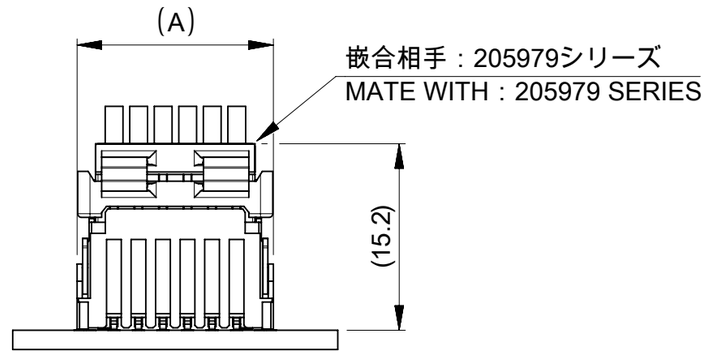

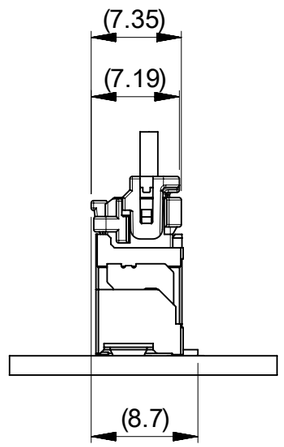

△4 TPAタイプ嵌合図
MATED CONNECTOR OF TPA TYPE

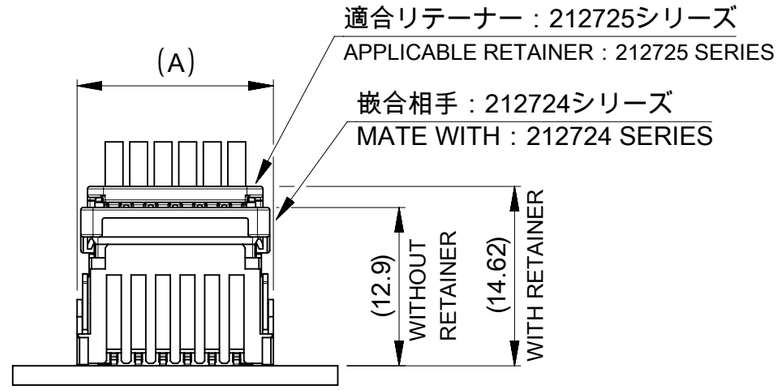

16.5	13.6	21.2	17.0	8
14.5	11.6	19.2	15.0	7
12.5	9.6	17.2	13.0	6
10.5	7.6	15.2	11.0	5
8.5	5.6	13.2	9.0	4
6.5	3.6	11.2	7.0	3
4.5	1.6	9.2	5.0	2
F	E	D	C	極数 CIRCUIT SIZE

THIS DRAWING CONTAINS INFORMATION THAT IS PROPRIETARY TO MOLEX ELECTRONIC TECHNOLOGIES, LLC AND SHOULD NOT BE USED WITHOUT WRITTEN PERMISSION

DIMENSION UNITS	mm
SCALE	NTS
GENERAL TOLERANCES (UNLESS SPECIFIED)	
ANGULAR TOL	± 3.0 °
4 PLACES	± 0.2
3 PLACES	± 0.2
2 PLACES	± 0.2
1 PLACE	± 0.2
0 PLACES	± 0.2
DRAFT WHERE APPLICABLE MUST REMAIN WITHIN DIMENSIONS	

CURRENT REV DESC: REMOVED OBSOLETED PART NUMBER AS PER PCN#517153

EC NO: 834848
DRWN: PONNAM 2025/08/29
CHK'D: GGA 2025/09/22
APPR: GGA 2025/09/22

INITIAL REVISION:
DRWN: KYAMADA02 2020/12/04
APPR: SAKIYAMA 2020/12/15

THIRD ANGLE PROJECTION | DRAWING: A3-SIZE | SERIES: 217063

molex

MICRO-ONE 2.0W/B GLOW WIRE TYPE
HEADER ASSEMBLY VERTICAL

PRODUCT CUSTOMER DRAWING

DOCUMENT NUMBER	DOC TYPE	DOC PART	REVISION
2170630000-SD	PSD	000	C1

MATERIAL NUMBER	CUSTOMER	SHEET NUMBER
SEE TABLE	GENERAL	2 OF 5

DOCUMENT STATUS	P1	RELEASE DATE	2025/09/22 11:13:46

FORMAT: master-lb-prod-A3
REVISION: J1
DATE: 2021/05/01

CASE OF WITHOUT COVER TAPE

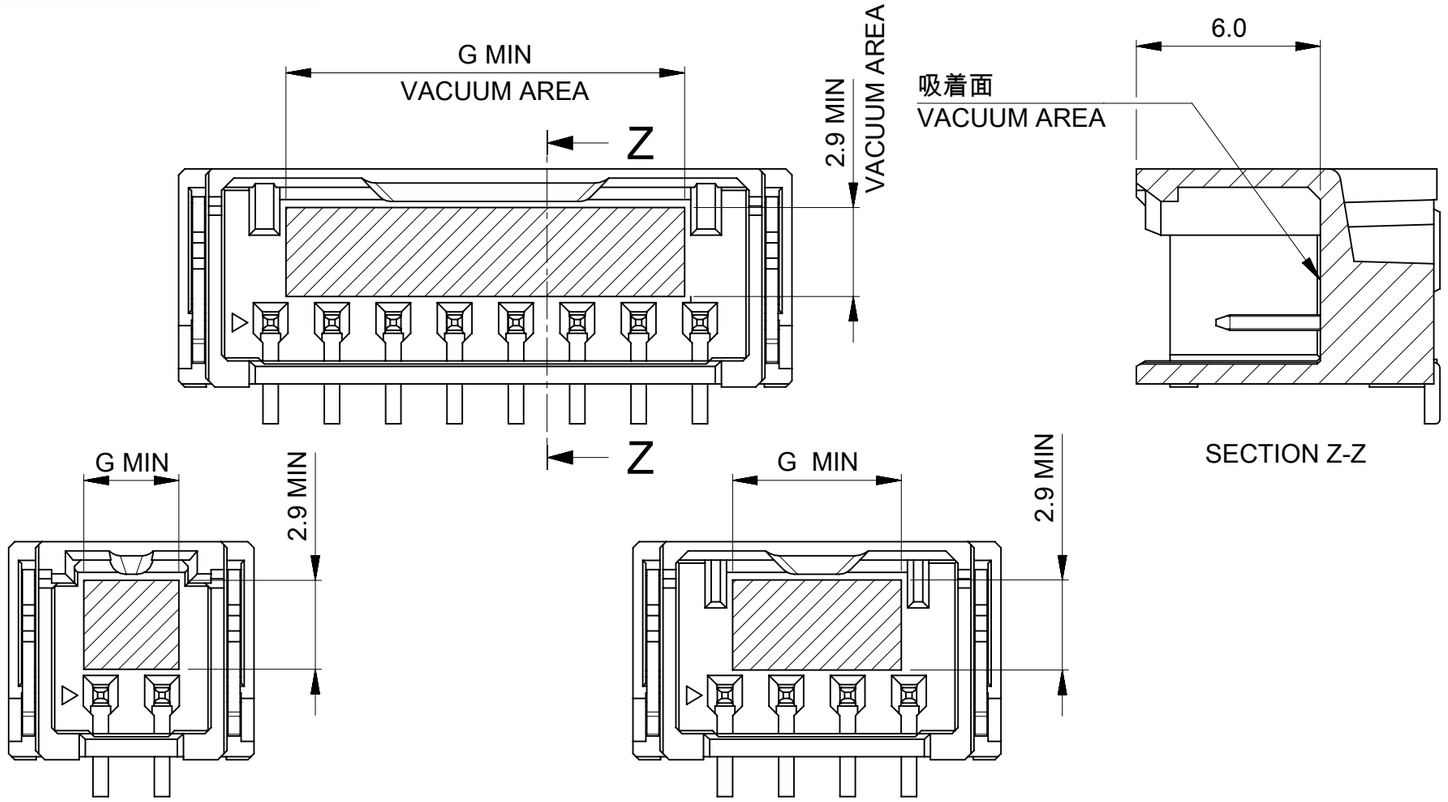

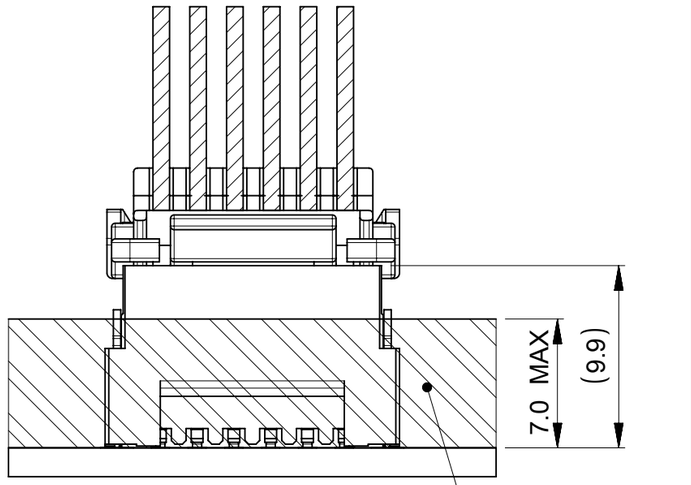

CASE OF WITH COVER TAPE

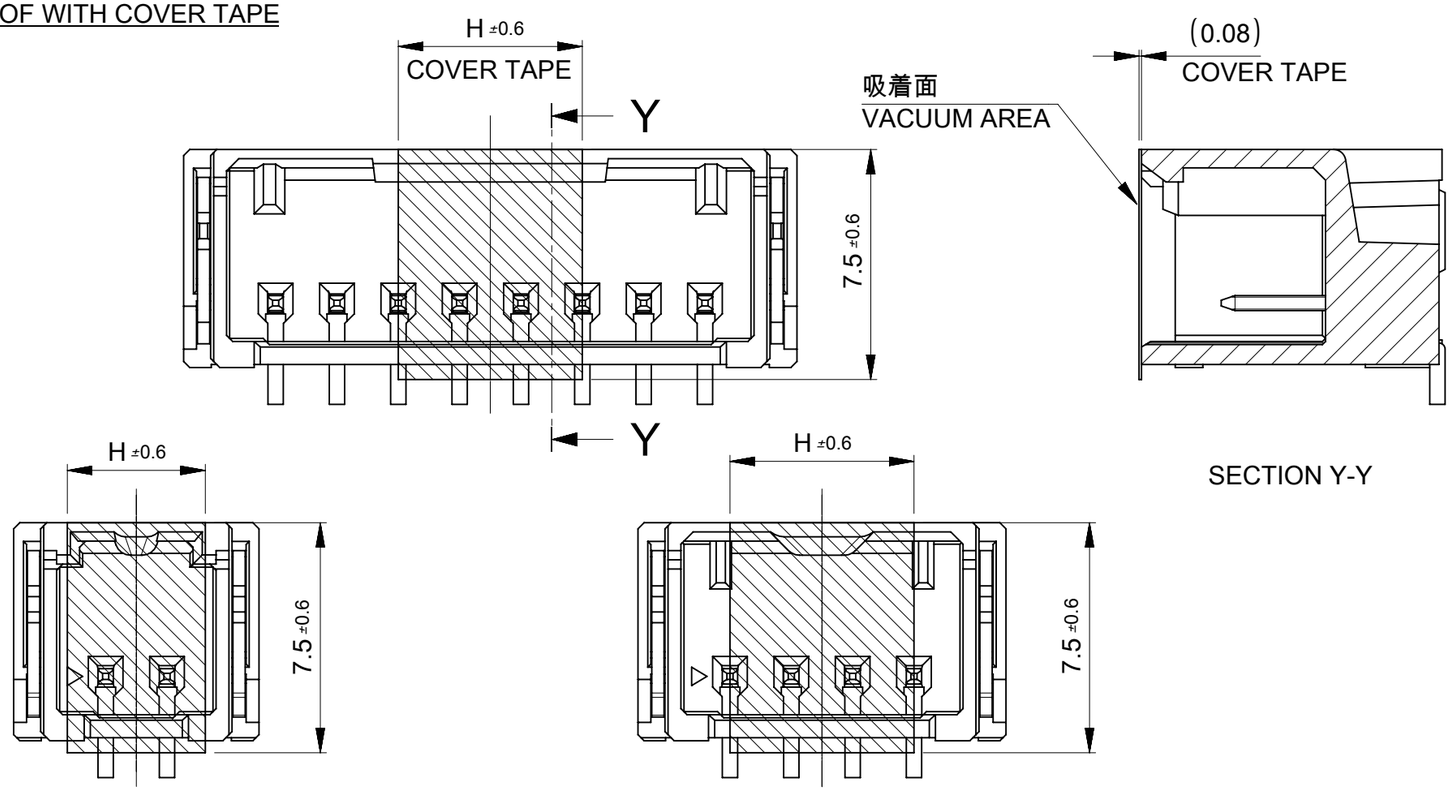

8.0	13.0	8
	11.0	7
	9.5	6
	7.5	5
6.0	5.5	4
	4.4	3
4.5	3.1	2
H	G	極数 CIRCUIT SIZE

THIS DRAWING CONTAINS INFORMATION THAT IS PROPRIETARY TO MOLEX ELECTRONIC TECHNOLOGIES, LLC AND SHOULD NOT BE USED WITHOUT WRITTEN PERMISSION

DIMENSION UNITS	mm
SCALE	NTS
GENERAL TOLERANCES (UNLESS SPECIFIED)	
ANGULAR TOL	± 3.0 °
4 PLACES	± 0.2
3 PLACES	± 0.2
2 PLACES	± 0.2
1 PLACE	± 0.2
0 PLACES	± 0.2
DRAFT WHERE APPLICABLE MUST REMAIN WITHIN DIMENSIONS	

CURRENT REV DESC: REMOVED OBSOLETED PART NUMBER AS PER PCN#517153

EC NO: 834848
DRWN: PONNAM 2025/08/29
CHK'D: GGA 2025/09/22
APPR: GGA 2025/09/22

INITIAL REVISION:
DRWN: KYAMADA02 2020/12/04
APPR: SAKIYAMA 2020/12/15

molex

MICRO-ONE 2.0W/B GLOW WIRE TYPE HEADER ASSEMBLY VERTICAL

PRODUCT CUSTOMER DRAWING

DOCUMENT NUMBER	DOC TYPE	DOC PART	REVISION
2170630000-SD	PSD	000	C1

THIRD ANGLE PROJECTION	DRAWING	SERIES	MATERIAL NUMBER	CUSTOMER	SHEET NUMBER
	A3-SIZE	217063	SEE TABLE	GENERAL	3 OF 5

DOCUMENT STATUS	P1	RELEASE DATE	2025/09/22 11:13:46

FORMAT: master-tb-prod-A3
REVISION: J1
DATE: 2021/05/01

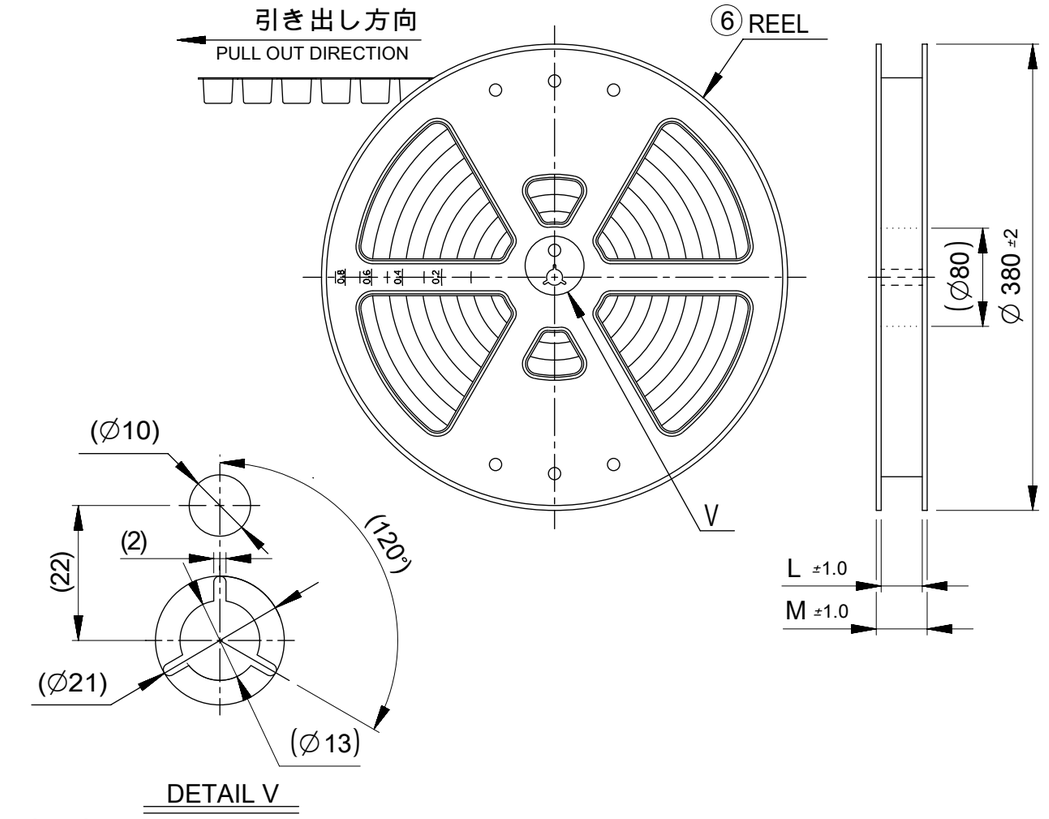

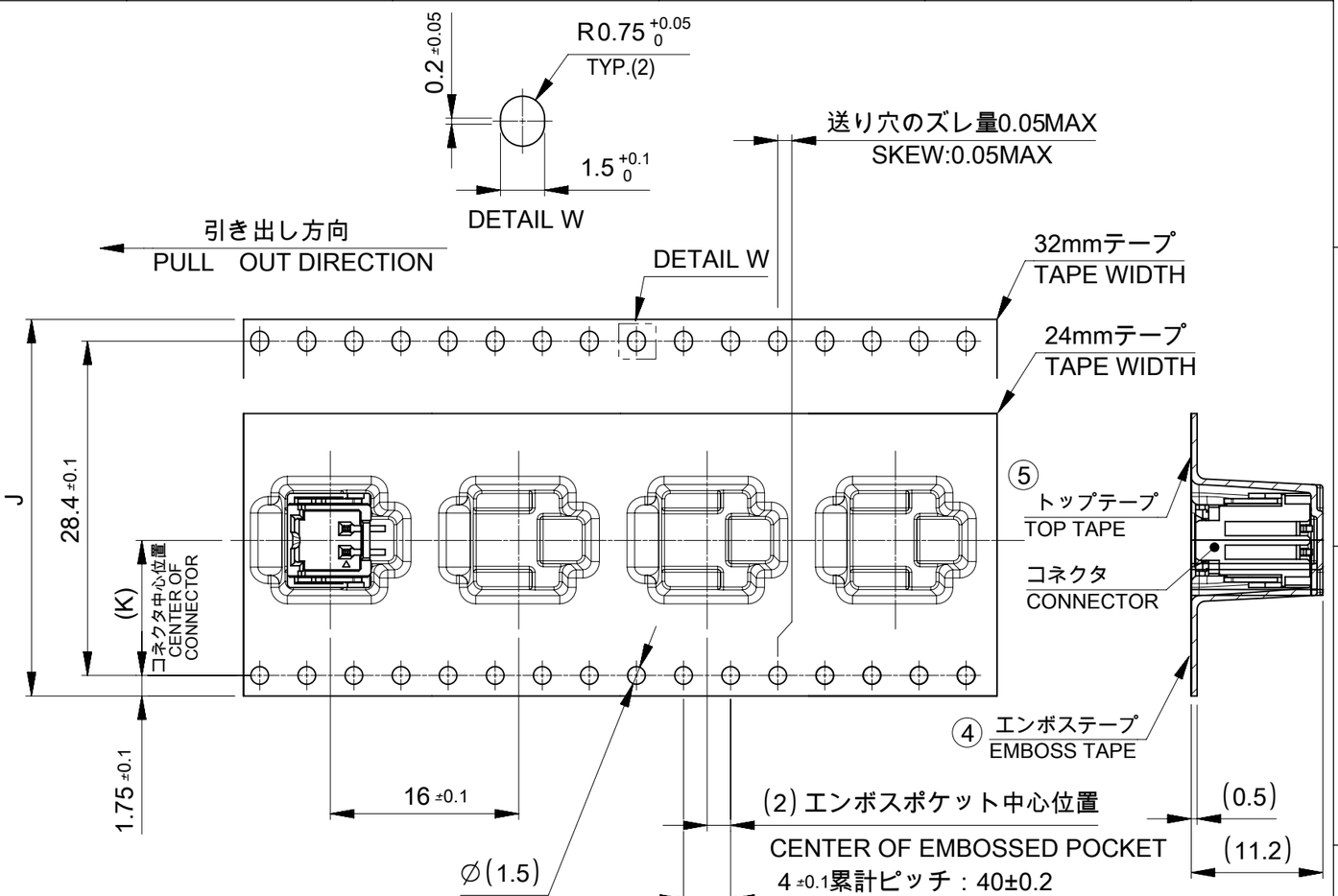

NOTES

12. 梱包数量 :500個/リール
    NUMBER OF CONNECTORS : 500 PIECES/REEL
13. リードテープ長さ
    LEAD TAPE LENGTH

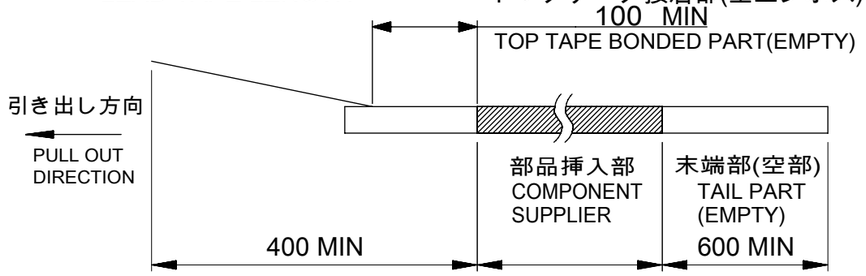

14. トップテープの剥離強度はIEC60286-3に準拠。
    TOP TAPE PEELING FORCE IS DEFINED BY IEC60286-3.
15. 梱包仕様書：2170639200-SPK 200
    PACKAGING SPECIFICATION:2170639200-SPK 200

16 発注番号：SHEET 5 参照
ORDER No.：PLEASE REFER TO SHEET 5 FOR PRODUCT LIST.

217063 0 * * *

極数
CIRCUIT SIZE

4 : カバーテープなし NATURAL(BEIGE)
WITHOUT COVER TAPE NATURAL(BEIGE)

5 : カバーテープなし BLACK
WITHOUT COVER TAPE BLACK

6 : カバーテープあり NATURAL(BEIGE)
WITH COVER TAPE NATURAL(BEIGE)

7 : カバーテープあり BLACK
WITH COVER TAPE BLACK

番号 NO.	部品 PART	材質 MATERIAL
④	エンボステープ EMBOSS TAPE	ポリスチレン(PS)、その他 POLYSTYRENE(PS), etc
⑤	トップテープ TOP TAPE	ポリエチレン(PE)、その他 POLYETHYLENE(PE), etc
⑥	リール REEL	ポリスチレン(PS) <リサイクル材を含む> POLYSTYRENE(PS) <RECYCLE MATERIAL CONTAINED>

M	L	K	エンボステープ幅 J WIDTH OF TEPE	極数 CIRCUIT SIZE
37.5	33.5	14.2	32±0.3	8
				7
				6
29.5	25.5	11.5	$24^{+0.3}_{-0.1}$	5
				4
				3
				2

THIS DRAWING CONTAINS INFORMATION THAT IS PROPRIETARY TO MOLEX ELECTRONIC TECHNOLOGIES, LLC AND SHOULD NOT BE USED WITHOUT WRITTEN PERMISSION

DIMENSION UNITS: mm | SCALE: NTS

GENERAL TOLERANCES (UNLESS SPECIFIED)

ANGULAR TOL	± 3.0 °
4 PLACES	± 2.0
3 PLACES	± 2.0
2 PLACES	± 2.0
1 PLACE	± 2.0
0 PLACES	± 2.0

DRAFT WHERE APPLICABLE MUST REMAIN WITHIN DIMENSIONS

CURRENT REV DESC: REMOVED OBSOLETED PART NUMBER AS PER PCN#517153

EC NO: 834848
DRWN: PONNAM 2025/08/29
CHK'D: GGA 2025/09/22
APPR: GGA 2025/09/22

INITIAL REVISION:
DRWN: KYAMADA02 2020/12/04
APPR: SAKIYAMA 2020/12/15

THIRD ANGLE PROJECTION | DRAWING: A3-SIZE | SERIES: 217063

molex

MICRO-ONE 2.0W/B GLOW WIRE TYPE HEADER ASSEMBLY VERTICAL

PRODUCT CUSTOMER DRAWING

DOCUMENT NUMBER	DOC TYPE	DOC PART	REVISION
2170630000-SD	PSD	000	C1

MATERIAL NUMBER	CUSTOMER	SHEET NUMBER
SEE TABLE	GENERAL	4 OF 5

DOCUMENT STATUS	P1	RELEASE DATE	2025/09/22 11:13:46

FORMAT: master-tb-prod-A3
REVISION: J1
DATE: 2021/05/01

△16 製品一覧　PRODUCT LIST

WITH COVER TAPE	WITHOUT COVER TAPE	
HOUSING COLOR BLACK	HOUSING COLOR BLACK	
2170630087	2170630085	8
0077	0075	7
0067	0065	6
0057	0055	5
0047	0045	4
0037	0035	3
2170630027	2170630025	2
発注番号 ORDER No.		極数 CIRCUIT SIZE
PACKAGING STYLE : EMBOSSED TAPE AND REEL		

THIS DRAWING CONTAINS INFORMATION THAT IS PROPRIETARY TO MOLEX ELECTRONIC TECHNOLOGIES, LLC AND SHOULD NOT BE USED WITHOUT WRITTEN PERMISSION

DIMENSION UNITS	SCALE
mm	NTS

GENERAL TOLERANCES (UNLESS SPECIFIED)	
ANGULAR TOL	± 3.0 °
4 PLACES	± 0.2
3 PLACES	± 0.2
2 PLACES	± 0.2
1 PLACE	± 0.2
0 PLACES	± 0.2

DRAFT WHERE APPLICABLE MUST REMAIN WITHIN DIMENSIONS

CURRENT REV DESC: REMOVED OBSOLETED PART NUMBER AS PER PCN#517153

EC NO: 834848
DRWN: PONNAM 2025/08/29
CHK'D: GGA 2025/09/22
APPR: GGA 2025/09/22

INITIAL REVISION:
DRWN: KYAMADA02 2020/12/04
APPR: SAKIYAMA 2020/12/15

molex

MICRO-ONE 2.0W/B GLOW WIRE TYPE HEADER ASSEMBLY VERTICAL

PRODUCT CUSTOMER DRAWING

DOCUMENT NUMBER	DOC TYPE	DOC PART	REVISION
2170630000-SD	PSD	000	C1

THIRD ANGLE PROJECTION	DRAWING	SERIES	MATERIAL NUMBER	CUSTOMER	SHEET NUMBER
	A3-SIZE	217063	SEE TABLE	GENERAL	5 OF 5

DOCUMENT STATUS	P1	RELEASE DATE	2025/09/22 11:13:46

FORMAT: master-ib-prod-A3
REVISION: J1
DATE: 2021/05/01