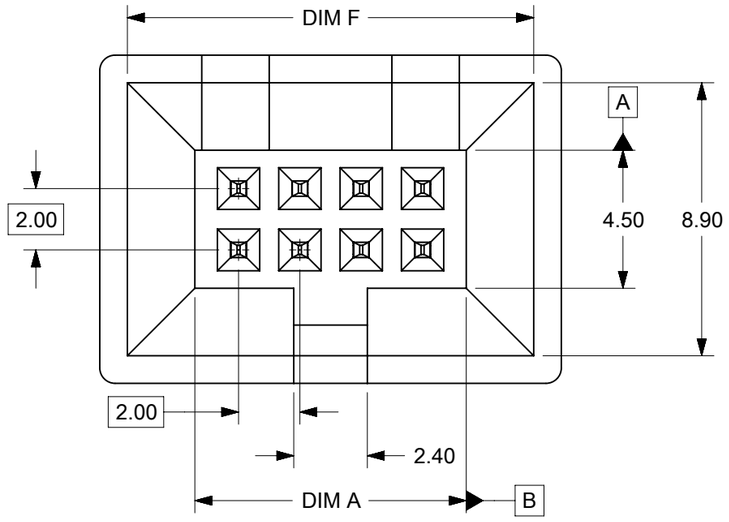

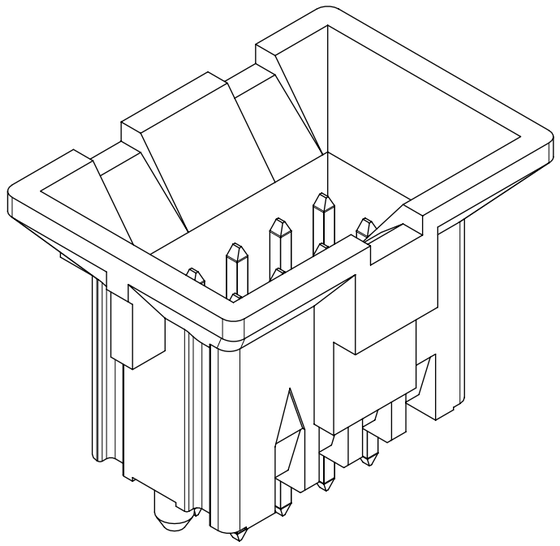

NOTES:

1. MATERIALS:
   HOUSING: LIQUID CRYSTALLINE POLYMER, GLASSED-FILLED
   UL 94V-0, BLACK
   TERMINALS: 0.50mm SQ. PHOSPHOR BRONZE
2. FINISHES: SEE PART NUMBER LEGEND
3. PRODUCT SPECIFICATION: PS-151013-0001
4. PACKAGING SPECIFICATION TUBE: PK-151013-0001 T&R: 1510130003-PK
5. MATES WITH:
   51110-XX50 (4 TO 20 CKTS)
   51110-XX51 (8 TO 12 CKTS ONLY)
   51110-XX52 (4, 6, AND 14 TO 20 CKTS)
   51110-XX60 (4 TO 12 CKTS)
6. PARTS CONFORMS TO CLASS "B" REQUIREMENTS OF COSMETIC SPECIFICATION PS-45499-002
7. MOLEX LOGO AND CAVITY ID TO BE LOCATED AS SHOWN
8. NON-FUNCTIONAL CORING IS SUBJECTED TO CHANGES WITHOUT NOTICE
9. DATECODE TO BE LOCATED APPROXIMATELY AS SHOWN
10. PLATING ID MARKING FOR DIFFERENT PLATING OPTIONS TO BE LOCATED AFTER DATE CODE AS SHOWN

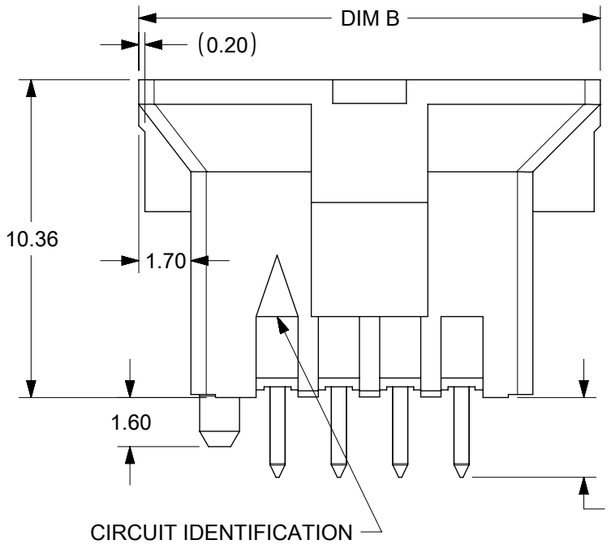

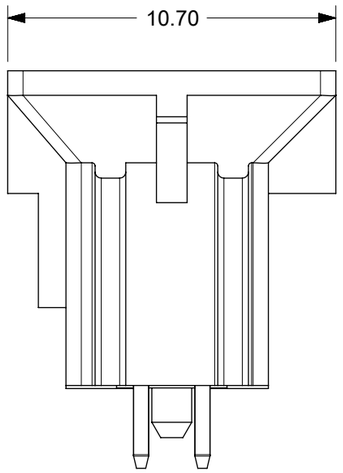

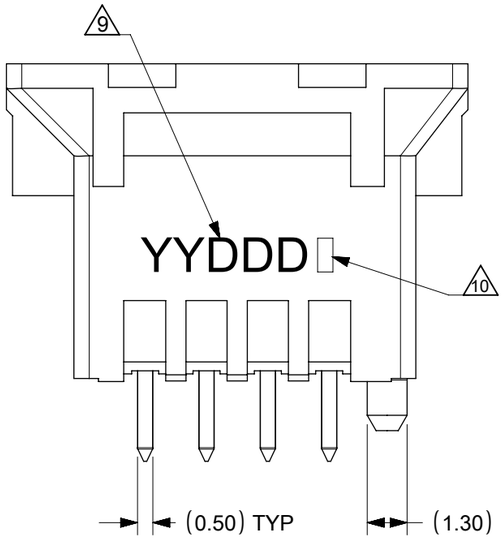

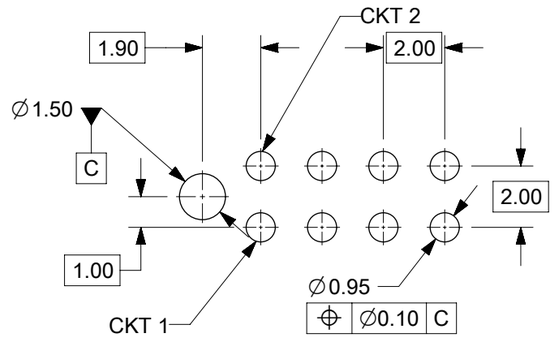

RECOMMENDED PCB LAYOUT
GENERAL TOLERANCE ±0.05

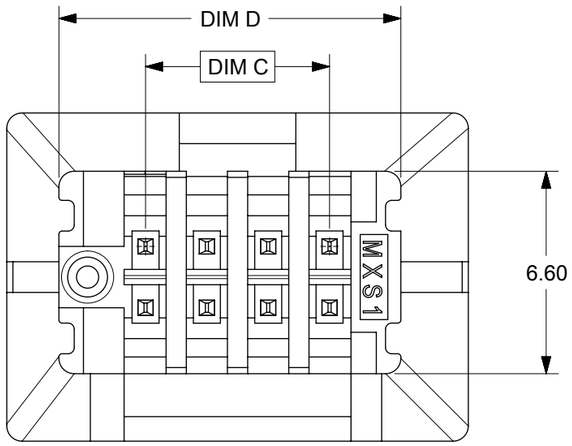

SYMBOLS	
E = 0	
F = 0	
P = 0	
S = 0	
▼ = 0	
C = 0	
☒ = 0	
■ = 0	
V = 0	

THIS DRAWING CONTAINS INFORMATION THAT IS PROPRIETARY TO MOLEX ELECTRONIC TECHNOLOGIES, LLC AND SHOULD NOT BE USED WITHOUT WRITTEN PERMISSION

DIMENSION UNITS	SCALE
mm	
GENERAL TOLERANCES (UNLESS SPECIFIED)	
ANGULAR TOL ± 3.0 °	
4 PLACES	±
3 PLACES	±
2 PLACES	± 0.25
1 PLACE	±
0 PLACES	±
DRAFT WHERE APPLICABLE MUST REMAIN WITHIN DIMENSIONS	

CURRENT REV DESC:

EC NO: 758477
DRWN: SUAIFR 2023/06/27
CHK'D: SUAIFR 2023/08/02
APPR: MRAMAKRISHNA 2023/08/02

INITIAL REVISION:
DRWN: GMENARLY 2014/05/02
APPR: KHLIM 2014/06/30

THIRD ANGLE PROJECTION | DRAWING: A3-SIZE | SERIES: 151013

molex

2MM PITCH MILLIGRID BMI
VERTICAL HEADER

PRODUCT CUSTOMER DRAWING

DOCUMENT NUMBER	DOC TYPE	DOC PART	REVISION
SD-151013-0001	PSD	000	A11

MATERIAL NUMBER	CUSTOMER	SHEET NUMBER
	GENERAL MARKET	1 OF 3

DOCUMENT STATUS	P1	RELEASE DATE	2023/08/02 15:41:54

FORMAT: master-lb-prod-A3
REVISION: H
DATE: 2018/01/18

PART NUMBER LEGEND

151013-X X Y Y

PLATING OPTIONS:

DIM E - PIN LENGTHS:
0: 2.60mm
1: 4.00mm
2: 3.00mm
3: 3.50mm
4: 4.50mm
5: 2.10mm

04 - 20	04 - 20 CKT IN TUBE
64 - 80	64 - 80 CKT IN T&R WITHOUT KAPTON TAPE 64 = 04CKT 66 = 06CKT - - - 78 = 18CKT 80 = 20CKT
84 - 98	84 - 98 CKT IN T&R WITH KAPTON TAPE 84 = 04CKT 86 = 06CKT - - - 98 = 18CKT 00 = 20CKT

ASSEMBLY PART NUMBER	CKT SIZE	DIM A	DIM B	DIM C	DIM D	DIM F
151013-XX04	4	4.85	11.05	2.00	7.15	9.25
151013-XX06	6	6.85	13.05	4.00	9.15	11.25
151013-XX08	8	8.85	15.05	6.00	11.15	13.25
151013-XX10	10	10.85	17.05	8.00	13.15	15.25
151013-XX12	12	12.85	19.05	10.00	15.15	17.25
151013-XX14	14	14.85	21.05	12.00	17.15	19.25
151013-XX16	16	16.85	23.05	14.00	19.15	21.25
151013-XX18	18	18.85	25.05	16.00	21.15	23.25
151013-XX20	20	20.85	27.05	18.00	23.15	25.25

CIRCUIT IDENTIFICATION ON HOUSING

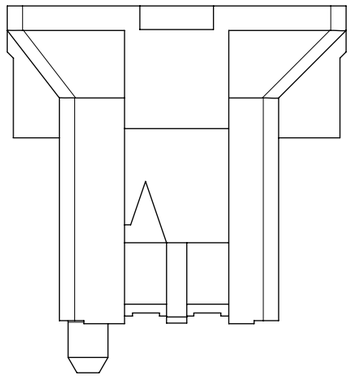

FOR 4 & 6 CIRCUITS

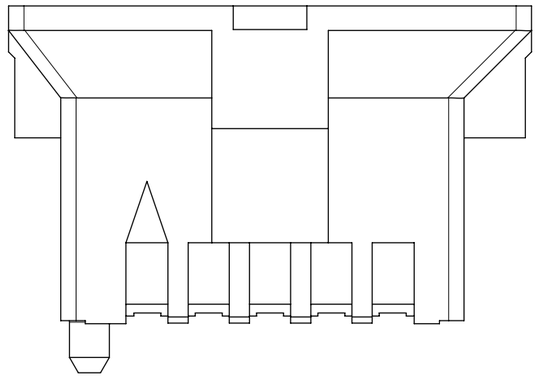

FOR 8 TO 20 CIRCUITS

PLATING THICKNESS	PLATING ID MARK 10
2 OR 6: 0.76µm MIN. GOLD ON CONTACT, 1.27µm MATTE TIN ON SOLDERTAIL OVER 1.27µm MIN. NICKEL UNDERPLATE OVERALL	
3: 0.38µm MIN. GOLD ON CONTACT, 1.27µm MATTE TIN ON SOLDERTAIL OVER 1.27µm MIN. NICKEL UNDERPLATE OVERALL	/
4: 0.05µm MIN. GOLD FLASH ON CONTACT, 1.27µm MATTE TIN ON SOLDERTAIL OVER 1.27µm MIN. NICKEL UNDERPLATE OVERALL	<
5: 2.50µm MIN. MATTE TIN ON CONTACT, 1.27µm MATTE TIN ON SOLDERTAIL OVER 1.27µm MIN. NICKEL UNDERPLATE OVERALL	

DOCUMENT STATUS	P1	RELEASE DATE	2023/08/02 15:41:54

FORMAT: master-tb-prod-A3
REVISION: H
DATE: 2018/01/18

SYMBOLS
A = 0
B = 0
C = 0
D = 0
E = 0
F = 0
G = 0
H = 0

DIMENSION UNITS: mm
SCALE:
GENERAL TOLERANCES (UNLESS SPECIFIED)
ANGULAR TOL ± 3.0 °
4 PLACES ±
3 PLACES ±
2 PLACES ± 0.25
1 PLACE ±
0 PLACES ±
DRAFT WHERE APPLICABLE MUST REMAIN WITHIN DIMENSIONS

THIS DRAWING CONTAINS INFORMATION THAT IS PROPRIETARY TO MOLEX ELECTRONIC TECHNOLOGIES, LLC AND SHOULD NOT BE USED WITHOUT WRITTEN PERMISSION

CURRENT REV DESC:

EC NO: 758477
DRWN: SUAIFR 2023/06/27
CHK'D: SUAIFR 2023/08/02
APPR: MRAMAKRISHNA 2023/08/02

INITIAL REVISION:
DRWN: GMENARLY 2014/05/02
APPR: KHLIM 2014/06/30

THIRD ANGLE PROJECTION
DRAWING: A3-SIZE
SERIES: 151013

molex

2MM PITCH MILLIGRID BMI
VERTICAL HEADER

PRODUCT CUSTOMER DRAWING

DOCUMENT NUMBER	DOC TYPE	DOC PART	REVISION
SD-151013-0001	PSD	000	A11

MATERIAL NUMBER	CUSTOMER	SHEET NUMBER
SEE TABLE	GENERAL MARKET	2 OF 3

ASSEMBLY PART NUMBER TUBE	ASSEMBLY PART NUMBER TAPE & REEL	CKT SIZE	DIM A	DIM B	DIM C	DIM D	DIM F	KAPTON TAPE
----	151013-3588	08	8.85	15.05	6.00	11.15	13.25	YES
----	151013-2092	12	12.85	19.05	10.00	15.15	17.25	YES
----	151013-2096	16	16.85	23.05	14.00	19.15	21.25	YES
----	151013-2076	16	16.85	23.05	14.00	19.15	21.25	NO
151013-3020	----	20	20.85	27.05	18.00	23.15	25.25	NO
151013-3520	151013-3580	20	20.85	27.05	18.00	23.15	25.25	NO
151013-2520	151013-2500	20	20.85	27.05	18.00	23.15	25.25	YES
	151013-2580	20	20.85	27.05	18.00	23.15	25.25	NO
151013-2220	151013-2200	20	20.85	27.05	18.00	23.15	25.25	YES

A11

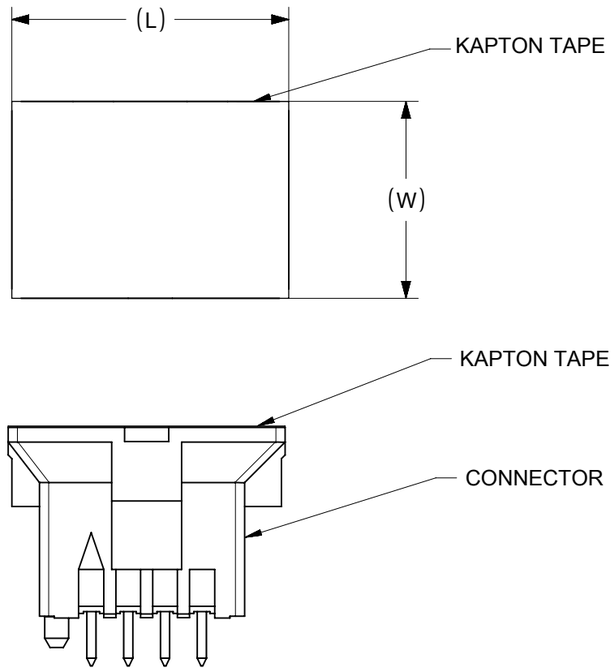

PART WITH KAPTON TAPE
8CKT SHOWN FOR ILLUSTRATION ONLY

NOTE:
IN TABLE HIGHLIGHTED F.G PART FOLLOWS PART LEGENDS FOR LENOVO & INTEL

ASSEMBLY PART NUMBER TUBE	CKT SIZE	DIM A	DIM B	DIM C	DIM D PIN LENGTH	KAPTON TAPE
151013-6508	08	8.85	15.05	6.00	2.1	YES

SYMBOLS	
F = 0	
E = 0	
B = 0	
S = 0	
▼ = 0	
C = 0	
☒ = 0	
■ = 0	
V = 0	

THIS DRAWING CONTAINS INFORMATION THAT IS PROPRIETARY TO MOLEX ELECTRONIC TECHNOLOGIES, LLC AND SHOULD NOT BE USED WITHOUT WRITTEN PERMISSION

DIMENSION UNITS	SCALE
mm	

GENERAL TOLERANCES (UNLESS SPECIFIED)

ANGULAR TOL	± 3.0 °
4 PLACES	±
3 PLACES	±
2 PLACES	± 0.25
1 PLACE	±
0 PLACES	±

DRAFT WHERE APPLICABLE MUST REMAIN WITHIN DIMENSIONS

CURRENT REV DESC:

EC NO: 758477
DRWN: SUAIFR 2023/06/27
CHK'D: SUAIFR 2023/08/02
APPR: MRAMAKRISHNA 2023/08/02

INITIAL REVISION:
DRWN: GMENARLY 2014/05/02
APPR: KHLIM 2014/06/30

THIRD ANGLE PROJECTION | DRAWING: A3-SIZE | SERIES: 151013

molex

2MM PITCH MILLIGRID BMI
VERTICAL HEADER

PRODUCT CUSTOMER DRAWING

DOCUMENT NUMBER	DOC TYPE	DOC PART	REVISION
SD-151013-0001	PSD	000	A11

MATERIAL NUMBER	CUSTOMER	SHEET NUMBER
SEE CHART	GENERAL MARKET	3 OF 3

DOCUMENT STATUS	P1	RELEASE DATE	2023/08/02 15:41:54

FORMAT: master-tb-prod-A3
REVISION: H
DATE: 2018/01/18