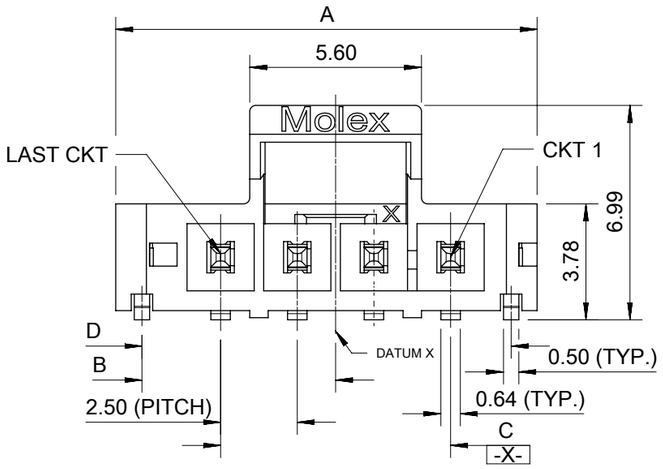


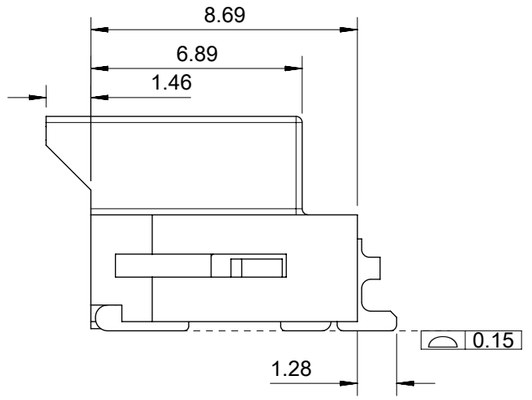


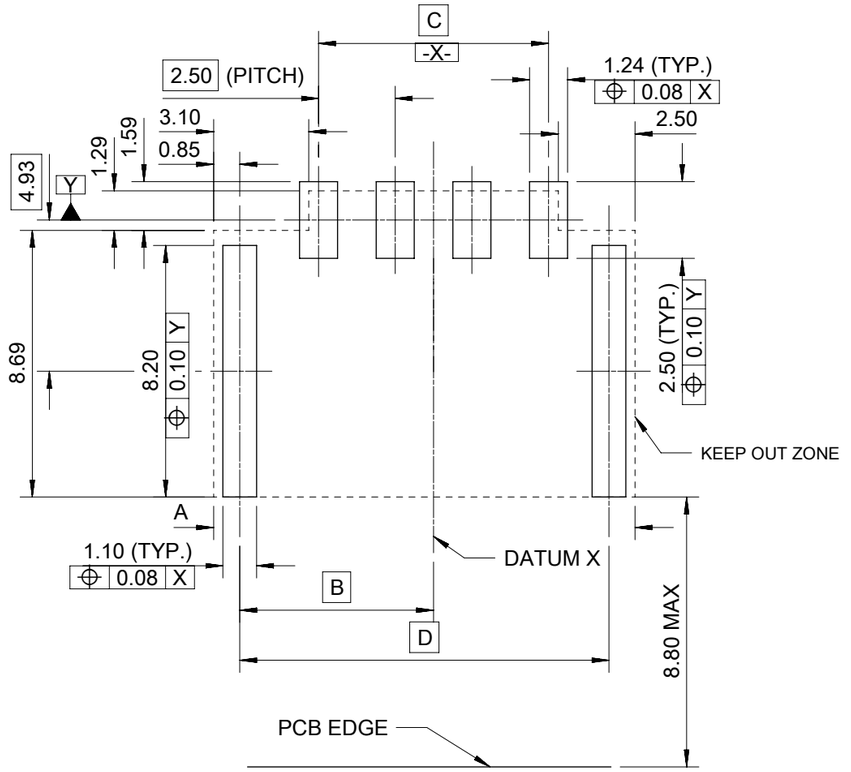


RECOMMENDED PCB LAYOUT(CONNECTOR SIDE VIEW)
THICKNESS=1.60mm MIN. TOLERANCE:±0.05

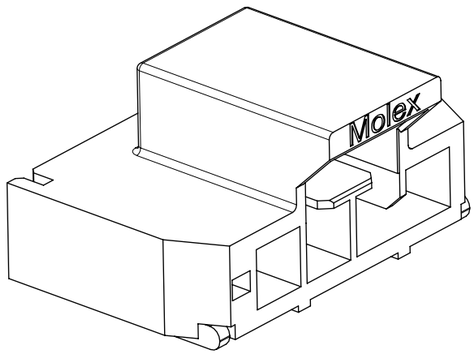


THIS DRAWING CONTAINS INFORMATION THAT IS PROPRIETARY TO MOLEX ELECTRONIC TECHNOLOGIES, LLC AND SHOULD NOT BE USED WITHOUT WRITTEN PERMISSION

| DIMENSION UNITS | SCALE |
|---|---|
| mm | NTS |

GENERAL TOLERANCES (UNLESS SPECIFIED)

| | | |
|---|---|---|
| ANGULAR TOL | ± | 3.0 ° |
| 4 PLACES | ± | |
| 3 PLACES | ± | |
| 2 PLACES | ± | 0.2 |
| 1 PLACE | ± | 0.3 |
| 0 PLACES | ± | |

DRAFT WHERE APPLICABLE MUST REMAIN WITHIN DIMENSIONS

CURRENT REV DESC:

EC NO: 826596
DRWN: GLLI 2025/05/23
CHK'D: XQZHANG 2025/06/26
APPR: XQZHANG 2025/06/26

INITIAL REVISION:
DRWN: WJHUO 2014/12/17
APPR: AYIN 2015/03/12

molex

SD DRAWING FOR
NANO-FIT HEADER OF SMT RA SINGLE POWER CONN.

PRODUCT CUSTOMER DRAWING

| DOCUMENT NUMBER | DOC TYPE | DOC PART | REVISION |
|---|---|---|---|
| SD-105430-001 | PSD | 000 | E1 |

| THIRD ANGLE PROJECTION | DRAWING | SERIES | MATERIAL NUMBER | CUSTOMER | SHEET NUMBER |
|---|---|---|---|---|---|
| | A3-SIZE | 105430 | | GENERAL MARKET | 1 OF 4 |

| DOCUMENT STATUS | P1 | RELEASE DATE | 2025/06/26 09:45:53 |
|---|---|---|---|

FORMAT: master-tb-prod-A3
REVISION: J1
DATE: 2021/05/01

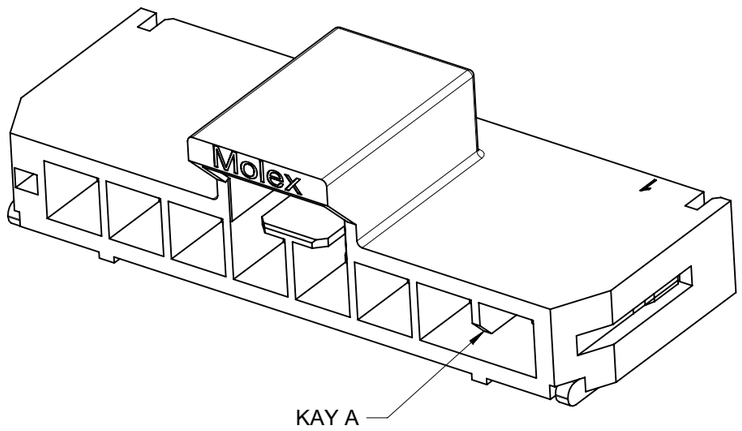


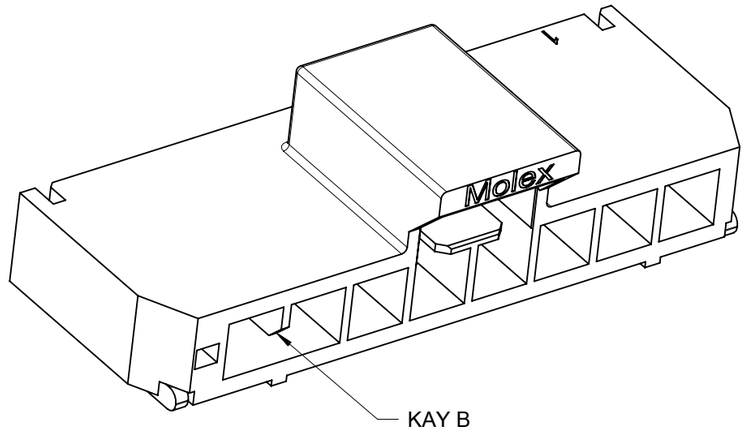


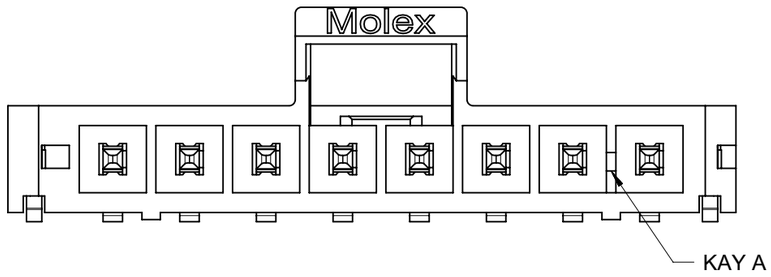


BLACK

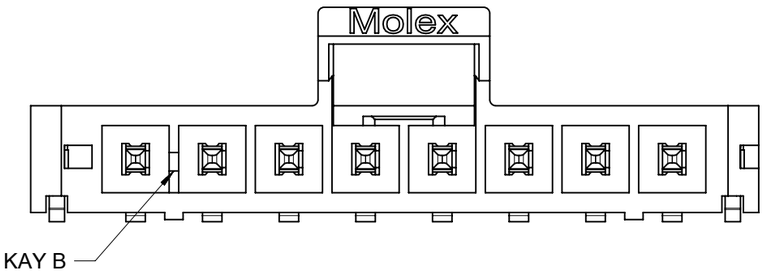


NATURAL

COLOR OPTION

THIS DRAWING CONTAINS INFORMATION THAT IS PROPRIETARY TO MOLEX ELECTRONIC TECHNOLOGIES, LLC AND SHOULD NOT BE USED WITHOUT WRITTEN PERMISSION

| DIMENSION UNITS | SCALE |
|---|---|
| mm | NTS |

GENERAL TOLERANCES (UNLESS SPECIFIED)

| | | |
|---|---|---|
| ANGULAR TOL | ± | 3.0 ° |
| 4 PLACES | ± | |
| 3 PLACES | ± | |
| 2 PLACES | ± | 0.2 |
| 1 PLACE | ± | 0.3 |
| 0 PLACES | ± | |

DRAFT WHERE APPLICABLE MUST REMAIN WITHIN DIMENSIONS

CURRENT REV DESC:

EC NO: 826596

| | | |
|---|---|---|
| DRWN: | GLLI | 2025/05/23 |
| CHK'D: | XQZHANG | 2025/06/26 |
| APPR: | XQZHANG | 2025/06/26 |

INITIAL REVISION:

| | | |
|---|---|---|
| DRWN: | WJHUO | 2014/12/17 |
| APPR: | AYIN | 2015/03/12 |

THIRD ANGLE PROJECTION | DRAWING: A3-SIZE | SERIES: 105430

molex

SD DRAWING FOR
NANO-FIT HEADER OF SMT RA SINGLE POWER CONN.

PRODUCT CUSTOMER DRAWING

| DOCUMENT NUMBER | DOC TYPE | DOC PART | REVISION |
|---|---|---|---|
| SD-105430-001 | PSD | 000 | E1 |

| MATERIAL NUMBER | CUSTOMER | SHEET NUMBER |
|---|---|---|
| | GENERAL MARKET | 2 OF 4 |

| DOCUMENT STATUS | P1 | RELEASE DATE | 2025/06/26 09:45:53 |
|---|---|---|---|

FORMAT: master-lb-prod-A3
REVISION: J1
DATE: 2021/05/01

| PART NUMBER | DIM. A | DIM. B | DIM. C | DIM. D | CKT SIZE | PLATING | LUBE |
|---|---|---|---|---|---|---|---|
| 105430-1102 | 8.74 | 3.82 | 2.50 | 7.04 | 2 | TIN | NO |
| 105430-1103 | 11.24 | 5.07 | 5.00 | 9.54 | 3 | | |
| 105430-1104 | 13.74 | 6.32 | 7.50 | 12.04 | 4 | | |
| 105430-1105 | 16.24 | 7.57 | 10.00 | 14.54 | 5 | | |
| 105430-1106 | 18.74 | 8.82 | 12.50 | 17.04 | 6 | | |
| 105430-1107 | 21.24 | 10.07 | 15.00 | 19.54 | 7 | | |
| 105430-1108 | 23.74 | 11.32 | 17.50 | 22.04 | 8 | | |
| 105430-1202 | 8.74 | 3.82 | 2.50 | 7.04 | 2 | GOLD 0.38 | |
| 105430-1203 | 11.24 | 5.07 | 5.00 | 9.54 | 3 | | |
| 105430-1204 | 13.74 | 6.32 | 7.50 | 12.04 | 4 | | |
| 105430-1205 | 16.24 | 7.57 | 10.00 | 14.54 | 5 | | |
| 105430-1206 | 18.74 | 8.82 | 12.50 | 17.04 | 6 | | |
| 105430-1207 | 21.24 | 10.07 | 15.00 | 19.54 | 7 | | |
| 105430-1208 | 23.74 | 11.32 | 17.50 | 22.04 | 8 | | |
| 105430-1302 | 8.74 | 3.82 | 2.50 | 7.04 | 2 | GOLD 0.76 | |
| 105430-1303 | 11.24 | 5.07 | 5.00 | 9.54 | 3 | | |
| 105430-1304 | 13.74 | 6.32 | 7.50 | 12.04 | 4 | | |
| 105430-1305 | 16.24 | 7.57 | 10.00 | 14.54 | 5 | | |
| 105430-1306 | 18.74 | 8.82 | 12.50 | 17.04 | 6 | | |
| 105430-1307 | 21.24 | 10.07 | 15.00 | 19.54 | 7 | | |
| 105430-1308 | 23.74 | 11.32 | 17.50 | 22.04 | 8 | | |
| 105430-1402 | 8.74 | 3.82 | 2.50 | 7.04 | 2 | GOLD 0.76 | YES |
| 105430-1403 | 11.24 | 5.07 | 5.00 | 9.54 | 3 | | |
| 105430-1404 | 13.74 | 6.32 | 7.50 | 12.04 | 4 | | |
| 105430-1405 | 16.24 | 7.57 | 10.00 | 14.54 | 5 | | |
| 105430-1406 | 18.74 | 8.82 | 12.50 | 17.04 | 6 | | |
| 105430-1407 | 21.24 | 10.07 | 15.00 | 19.54 | 7 | | |
| 105430-1408 | 23.74 | 11.32 | 17.50 | 22.04 | 8 | | |

COLOR: BLACK

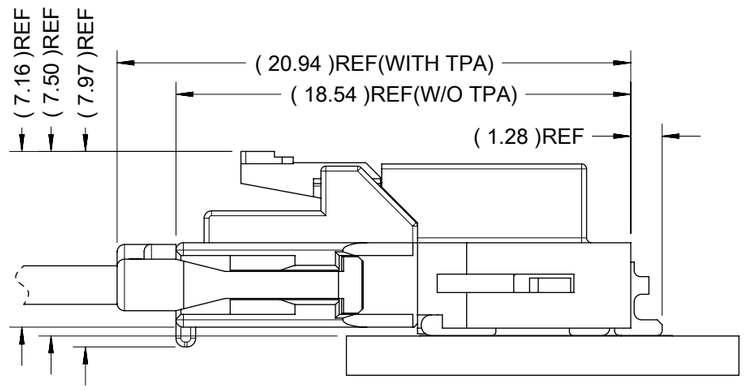


| PART NUMBER | DIM. A | DIM. B | DIM. C | DIM. D | CKT SIZE | PLATING | LUBE |
|---|---|---|---|---|---|---|---|
| 105430-2102 | 8.74 | 3.82 | 2.50 | 7.04 | 2 | TIN | NO |
| 105430-2103 | 11.24 | 5.07 | 5.00 | 9.54 | 3 | | |
| 105430-2104 | 13.74 | 6.32 | 7.50 | 12.04 | 4 | | |
| 105430-2105 | 16.24 | 7.57 | 10.00 | 14.54 | 5 | | |
| 105430-2106 | 18.74 | 8.82 | 12.50 | 17.04 | 6 | | |
| 105430-2107 | 21.24 | 10.07 | 15.00 | 19.54 | 7 | | |
| 105430-2108 | 23.74 | 11.32 | 17.50 | 22.04 | 8 | | |
| 105430-2202 | 8.74 | 3.82 | 2.50 | 7.04 | 2 | GOLD 0.38 | |
| 105430-2203 | 11.24 | 5.07 | 5.00 | 9.54 | 3 | | |
| 105430-2204 | 13.74 | 6.32 | 7.50 | 12.04 | 4 | | |
| 105430-2205 | 16.24 | 7.57 | 10.00 | 14.54 | 5 | | |
| 105430-2206 | 18.74 | 8.82 | 12.50 | 17.04 | 6 | | |
| 105430-2207 | 21.24 | 10.07 | 15.00 | 19.54 | 7 | | |
| 105430-2208 | 23.74 | 11.32 | 17.50 | 22.04 | 8 | | |
| 105430-2302 | 8.74 | 3.82 | 2.50 | 7.04 | 2 | GOLD 0.76 | |
| 105430-2303 | 11.24 | 5.07 | 5.00 | 9.54 | 3 | | |
| 105430-2304 | 13.74 | 6.32 | 7.50 | 12.04 | 4 | | |
| 105430-2305 | 16.24 | 7.57 | 10.00 | 14.54 | 5 | | |
| 105430-2306 | 18.74 | 8.82 | 12.50 | 17.04 | 6 | | |
| 105430-2307 | 21.24 | 10.07 | 15.00 | 19.54 | 7 | | |
| 105430-2308 | 23.74 | 11.32 | 17.50 | 22.04 | 8 | | |
| 105430-2402 | 8.74 | 3.82 | 2.50 | 7.04 | 2 | GOLD 0.76 | YES |
| 105430-2403 | 11.24 | 5.07 | 5.00 | 9.54 | 3 | | |
| 105430-2404 | 13.74 | 6.32 | 7.50 | 12.04 | 4 | | |
| 105430-2405 | 16.24 | 7.57 | 10.00 | 14.54 | 5 | | |
| 105430-2406 | 18.74 | 8.82 | 12.50 | 17.04 | 6 | | |
| 105430-2407 | 21.24 | 10.07 | 15.00 | 19.54 | 7 | | |
| 105430-2408 | 23.74 | 11.32 | 17.50 | 22.04 | 8 | | |

COLOR: NATURAL

## NOTES FOR ALL PARTS

1> MATERIAL:
HOUSING: LCP, UL 94V-0.
TERMINAL: BRASS.
SOLDER CLIP: BRASS.
2> PLATING FINISHED:
TERMINAL:
CONTACT AREA:
a. REFLOWED MATTE TIN 0.76 MICRONS MIN; b. GOLD 0.38 MICRONS MIN; c. GOLD 0.76 MICRONS MIN.
SOLDER AREA: TIN 0.76 MICRONS MINIMUM.
UNDER PALTING NICKEL 1.25 MICRONS MINIMUM.
SOLDER CLIP: TIN 2.5 MICRONS MINIMUM; UNDER PLATING NICKEL 1.25 MICRONS MINIMUM.

3> PRODUCT SPECIFICATION: PS-105405-001.
4> PACKAGE: TAPE REEL, DETAILS REFER TO DRAWING 1054301000-PK.
5> PRODUCT MATE WITH SERIES OF 105307 AND 226354(RECEPTACLE).
6> PARTS CONFORM TO CLASS 'B' REQUIREMENTS OF COSMETIC SPECIFICATION PS-45499-002.

THIS DRAWING CONTAINS INFORMATION THAT IS PROPRIETARY TO MOLEX ELECTRONIC TECHNOLOGIES, LLC AND SHOULD NOT BE USED WITHOUT WRITTEN PERMISSION

| DIMENSION UNITS | SCALE |
|---|---|
| mm | NTS |

GENERAL TOLERANCES (UNLESS SPECIFIED)

| | |
|---|---|
| ANGULAR TOL | ± 3.0 ° |
| 4 PLACES | ± |
| 3 PLACES | ± |
| 2 PLACES | ± 0.2 |
| 1 PLACE | ± 0.3 |
| 0 PLACES | ± |

DRAFT WHERE APPLICABLE MUST REMAIN WITHIN DIMENSIONS

CURRENT REV DESC:

EC NO: 826596
DRWN: GLLI 2025/05/23
CHK'D: XQZHANG 2025/06/26
APPR: XQZHANG 2025/06/26

INITIAL REVISION:
DRWN: WJHUO 2014/12/17
APPR: AYIN 2015/03/12

molex

SD DRAWING FOR NANO-FIT HEADER OF SMT RA SINGLE POWER CONN.

PRODUCT CUSTOMER DRAWING

| DOCUMENT NUMBER | DOC TYPE | DOC PART | REVISION |
|---|---|---|---|
| SD-105430-001 | PSD | 000 | E1 |

| THIRD ANGLE PROJECTION | DRAWING | SERIES | MATERIAL NUMBER | CUSTOMER | SHEET NUMBER |
|---|---|---|---|---|---|
| | A3-SIZE | 105430 | | GENERAL MARKET | 3 OF 4 |

| DOCUMENT STATUS | P1 | RELEASE DATE | 2025/06/26 09:45:53 |
|---|---|---|---|

FORMAT: master-tb-prod-A3
REVISION: J1
DATE: 2021/05/01

| | 2 CKT | 3 CKT | 4 CKT | 5 CKT |
|---|---|---|---|---|
| BLACK | 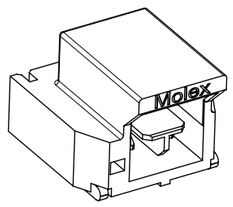 | 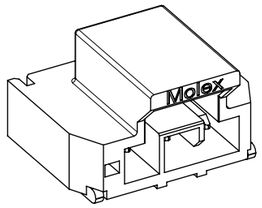 | 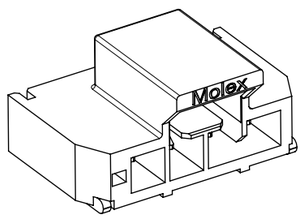 | 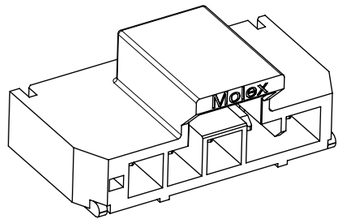 |
| NATURAL | 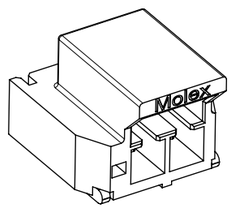 | 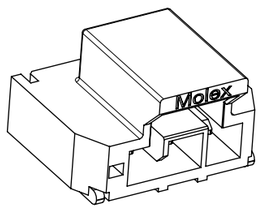 | 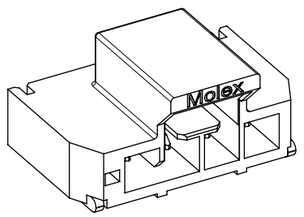 | 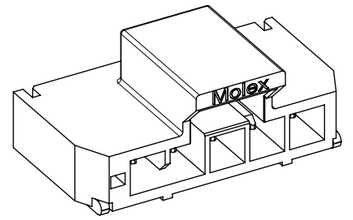 |

| | 6 CKT | 7 CKT | 8 CKT |
|---|---|---|---|
| BLACK | 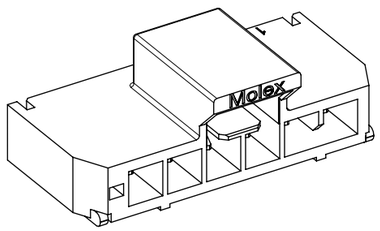 | 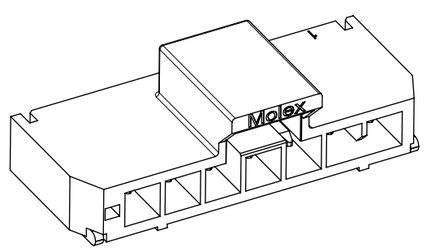 | 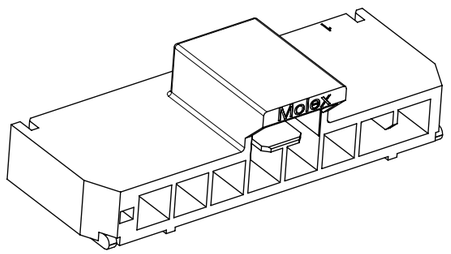 |
| NATURAL | 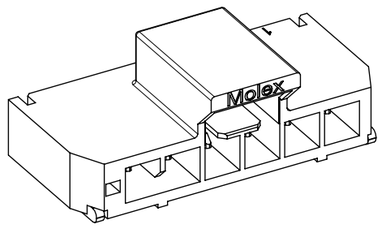 | 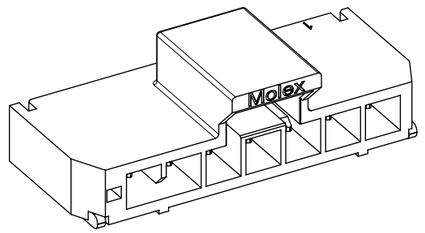 | 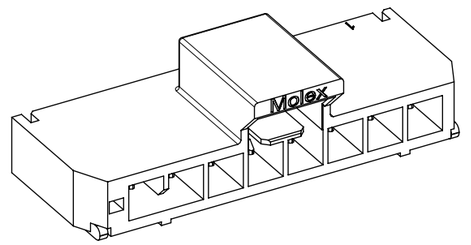 |

THIS DRAWING CONTAINS INFORMATION THAT IS PROPRIETARY TO MOLEX ELECTRONIC TECHNOLOGIES, LLC AND SHOULD NOT BE USED WITHOUT WRITTEN PERMISSION

| DIMENSION UNITS | SCALE |
|---|---|
| mm | NTS |

GENERAL TOLERANCES (UNLESS SPECIFIED)

| | | |
|---|---|---|
| ANGULAR TOL | ± | 3.0 ° |
| 4 PLACES | ± | |
| 3 PLACES | ± | |
| 2 PLACES | ± | 0.2 |
| 1 PLACE | ± | 0.3 |
| 0 PLACES | ± | |

DRAFT WHERE APPLICABLE MUST REMAIN WITHIN DIMENSIONS

CURRENT REV DESC:

EC NO: 826596
DRWN: GLLI 2025/05/23
CHK'D: XQZHANG 2025/06/26
APPR: XQZHANG 2025/06/26

INITIAL REVISION:
DRWN: WJHUO 2014/12/17
APPR: AYIN 2015/03/12

THIRD ANGLE PROJECTION | DRAWING: A3-SIZE | SERIES: 105430

molex

SD DRAWING FOR
NANO-FIT HEADER OF SMT RA SINGLE POWER CONN.

PRODUCT CUSTOMER DRAWING

| DOCUMENT NUMBER | DOC TYPE | DOC PART | REVISION |
|---|---|---|---|
| SD-105430-001 | PSD | 000 | E1 |

| MATERIAL NUMBER | CUSTOMER | SHEET NUMBER |
|---|---|---|
| | GENERAL MARKET | 4 OF 4 |

| DOCUMENT STATUS | P1 | RELEASE DATE | 2025/06/26 09:45:53 |
|---|---|---|---|

FORMAT: master-lb-prod-A3
REVISION: J1
DATE: 2021/05/01