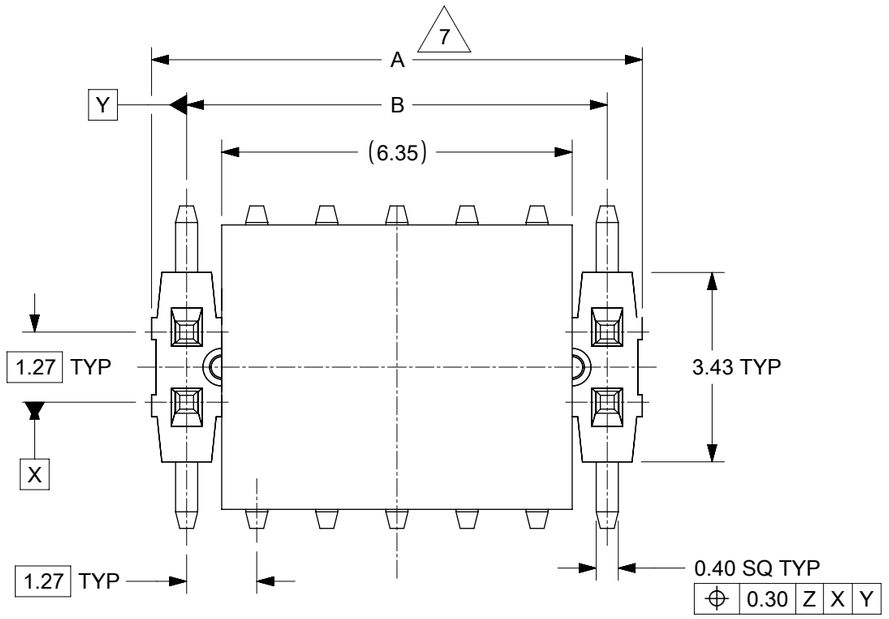

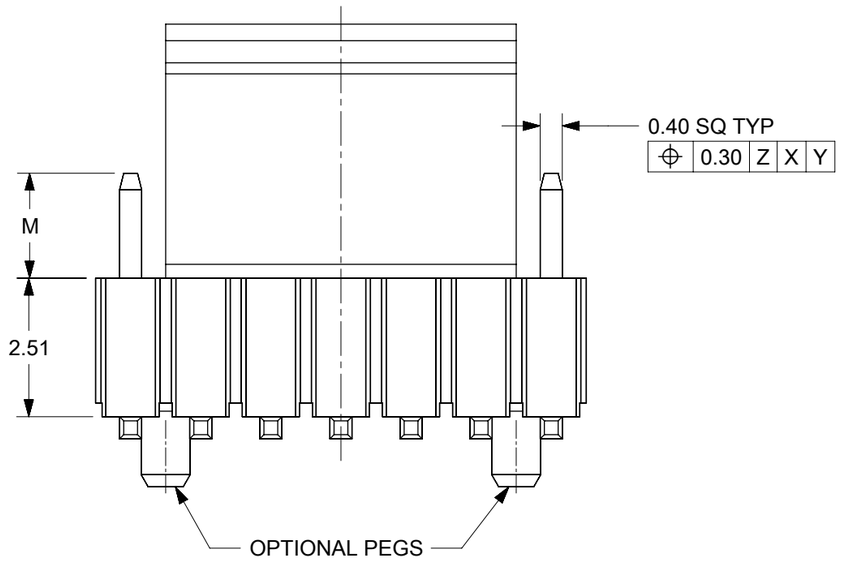

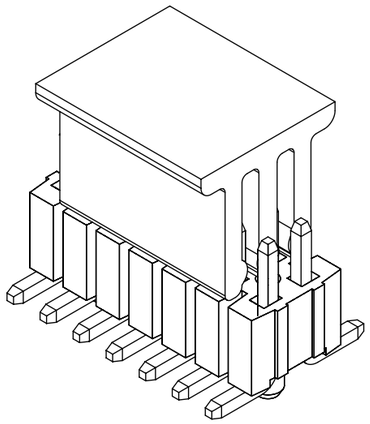

6 CAP POSITION WITH RESPECT TO CONNECTOR

FOR CKT 10 & BELOW & CKT 14, 18, 22, 26, 30, 34, 38, 42, 46, 50, 54, 58, 62, 66, 70, 74, 78, 82, 86, 90, 94, 98	FOR 12, 16, 20, 24, 28, 32, 36, 40, 44, 48, 52, 56, 60, 64, 68, 72, 76, 80, 84, 86, 92, 96, 100
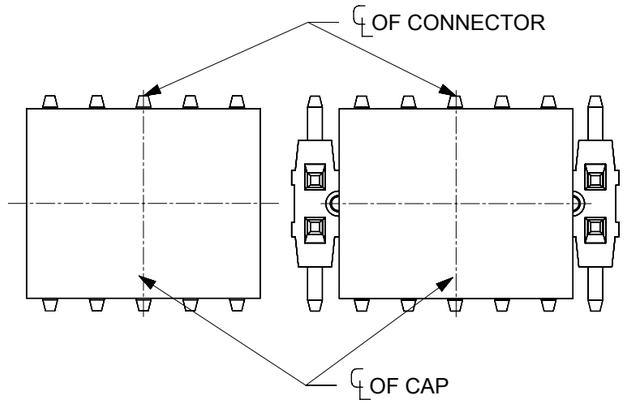	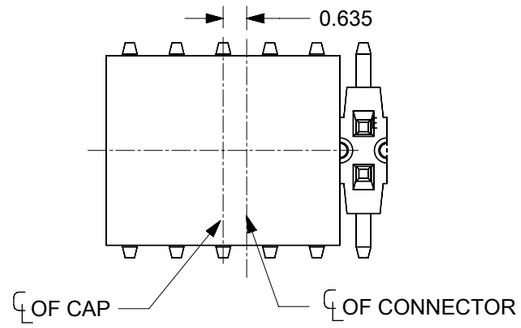

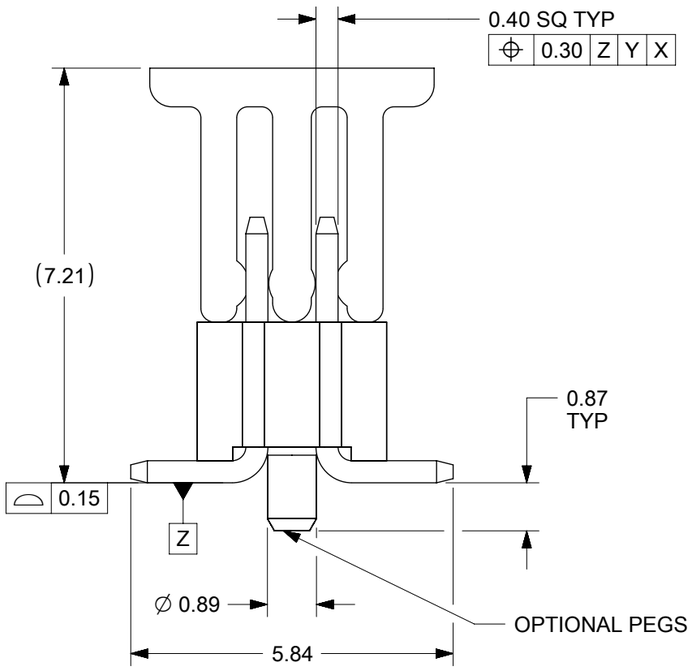

THIS DRAWING CONTAINS INFORMATION THAT IS PROPRIETARY TO MOLEX ELECTRONIC TECHNOLOGIES, LLC AND SHOULD NOT BE USED WITHOUT WRITTEN PERMISSION

DIMENSION UNITS	mm
SCALE	NTS
GENERAL TOLERANCES (UNLESS SPECIFIED)	
ANGULAR TOL ±	3.0 °
4 PLACES ±	
3 PLACES ±	
2 PLACES ±	0.2
1 PLACE ±	
0 PLACES ±	
DRAFT WHERE APPLICABLE MUST REMAIN WITHIN DIMENSIONS	

CURRENT REV DESC:

EC NO: 799777
DRWN: SUAIFR 2024/09/19
CHK'D: SUAIFR 2024/10/01
APPR: MRAMAKRISHNA 2024/10/01

INITIAL REVISION:
DRWN: SCHEONG 2016/09/14
APPR: SCHEONG 2016/11/10

molex

1.27MM PITCH SMT HEADER
WITH CAP PACKED IN TUBE

PRODUCT CUSTOMER DRAWING

DOCUMENT NUMBER	DOC TYPE	DOC PART	REVISION
SD-87933-0001	PSD	000	C6

THIRD ANGLE PROJECTION	DRAWING	SERIES	MATERIAL NUMBER	CUSTOMER	SHEET NUMBER
	A3-SIZE	87933	SEE TABLE	GENERAL MARKET	1 OF 6

DOCUMENT STATUS	P1	RELEASE DATE	2024/10/01 05:56:12

FORMAT: master_Sheet-A3
REVISION: J
DATE: 2020/01/1

CKT SIZE	DIM A	DIM B	DIM C
4	2.54	1.27	-
6	3.81	2.54	-
8	5.08	3.81	-
10	6.35	5.08	3.81
12	7.62	6.35	-
14	8.89	7.62	-
16	10.16	8.89	-
18	11.43	10.16	-
20	12.70	11.43	10.16
22	13.97	12.70	-
24	15.24	13.97	-

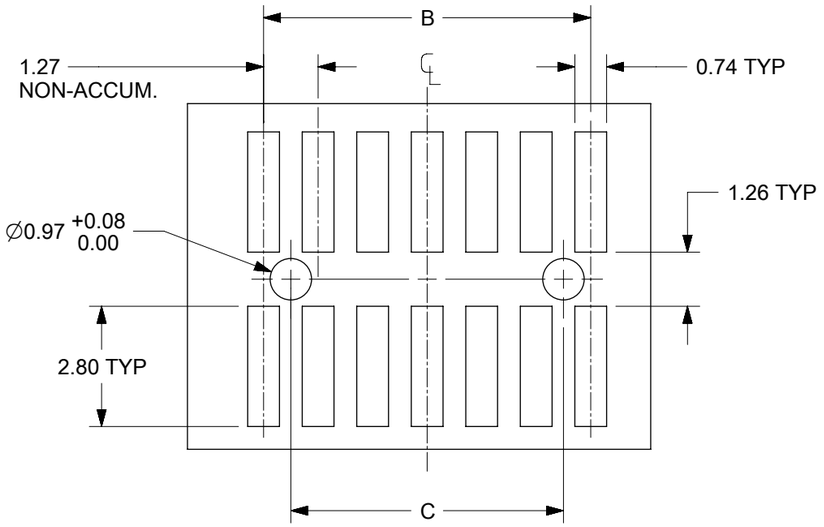

RECOMMENDED PCB LAYOUT
(PARTS WITH PEGS)
MANUFACTURING TOLERANCE ±0.05

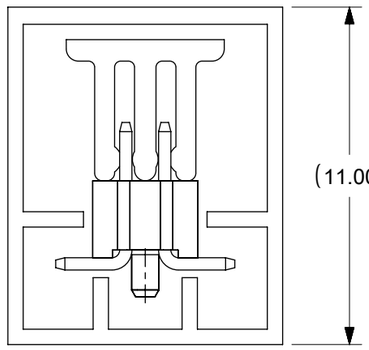

PART WITH PEG & CAP
PACKED IN TUBE

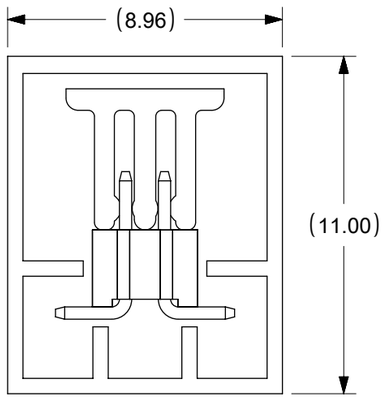

PART WITHOUT PEG &
WITH CAP PACKED IN TUBE

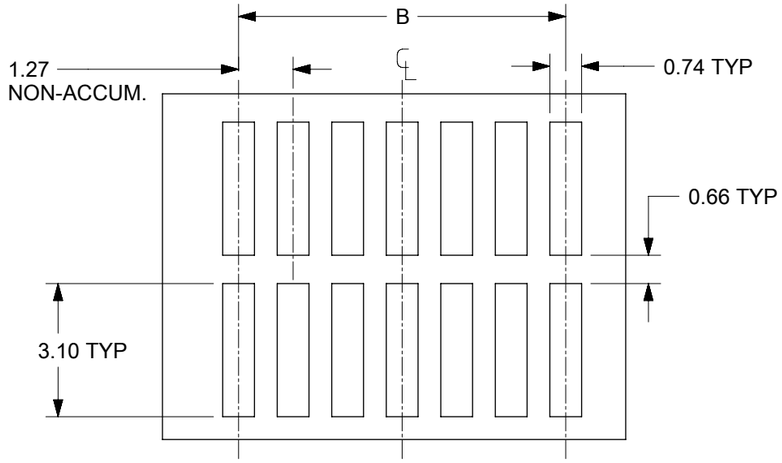

RECOMMENDED PCB LAYOUT
(IMPROVED FOR WITHOUT PEGS OPTION)
MANUFACTURING TOLERANCE ±0.05

NOTE:
1. MATERIAL: HOUSING: LCP GLASS FILLED,
   COLOR: BLACK
   TERMINAL: COPPER ALLOY
2. PIN PUSHOUT FORCE: 0.4KG MIN. IN EITHER DIRECTION.
3. PLATING FINISH:
   1 - 2 MICRO INCH MIN. GOLD FLASH OVERALL,
   50 MICRO INCH MIN. NICKEL UNDERPLATED
   2 - 100 MICRO INCH MIN. TIN OVERALL,
   50 MICRO INCH MIN. NICKEL UNDERPLATED
   3 - 30 MICRO INCH MIN. GOLD PLATE IN SELECTED AREA AND
   80 MICRO INCH MIN. TIN IN SELECTED AREA OVER,
   50 MICRO INCH MIN. NICKEL UNDERPLATED
   4 - 15 MICRO INCH MIN. GOLD PLATE IN SELECTED AREA AND
   80 MICRO INCH MIN. TIN IN SELECTED AREA OVER,
   50 MICRO INCH MIN. NICKEL UNDERPLATED
   5 - 2 MICRO INCH MIN. GOLD FLASH IN SELECTED AREA AND
   100 MICRO INCH MIN. TIN IN SELECTED AREA OVER,
   50 MICRO INCH MIN. NICKEL UNDERPLATED
4. THE ABOVE 14 CKT SHOWN IS FOR ILLUSTRATION ONLY.
5. PARTS TO BE PACKED IN TUBE EXCEPT FOR 4 CKTS.
6. POSITION OF CAP TO BE LOCATED AS SHOWN.
7. IRREGULAR CIRCUIT CUTOFF WITHIN BREAKAWAY SECTION IS PERMISSIBLE. CUTTING OR CHIPPING OF THE MAIN BODY IS NOT ACCEPTABLE.
8. PACKAGING SPECIFICATION REFER TO
   TUBE : PK-89990-565
   TAPE & REEL : PK-87933-300
9. PRODUCT SPECIFICATION: 879330001_PS
10. MATED SERIES: 78120 EXCEPT FOR FULL TIN PLATING FINISH
11. PARTS CONFORMS TO CLASS “B” REQUIREMENT TO COSMETIC SPECIFICATION PS-45499-002

THIS DRAWING CONTAINS INFORMATION THAT IS PROPRIETARY TO MOLEX ELECTRONIC TECHNOLOGIES, LLC AND SHOULD NOT BE USED WITHOUT WRITTEN PERMISSION

DIMENSION UNITS	mm
SCALE	NTS
GENERAL TOLERANCES (UNLESS SPECIFIED)	
ANGULAR TOL ±	3.0 °
4 PLACES ±	
3 PLACES ±	
2 PLACES ±	0.2
1 PLACE ±	
0 PLACES ±	
DRAFT WHERE APPLICABLE MUST REMAIN WITHIN DIMENSIONS	

CURRENT REV DESC:

EC NO: 799777
DRWN: SUAIFR 2024/09/19
CHK'D: SUAIFR 2024/10/01
APPR: MRAMAKRISHNA 2024/10/01

INITIAL REVISION:
DRWN: SCHEONG 2016/09/14
APPR: SCHEONG 2016/11/10

molex

1.27MM PITCH SMT HEADER
WITH CAP PACKED IN TUBE

PRODUCT CUSTOMER DRAWING

DOCUMENT NUMBER	DOC TYPE	DOC PART	REVISION
SD-87933-0001	PSD	000	C6

THIRD ANGLE PROJECTION	DRAWING	SERIES	MATERIAL NUMBER	CUSTOMER	SHEET NUMBER
	A3-SIZE	87933	SEE TABLE	GENERAL MARKET	2 OF 6

DOCUMENT STATUS	P1	RELEASE DATE	2024/10/01 05:56:12

FORMAT: mxd_tmpl_v20-A3
REVISION: J
DATE: 2020/01/16

P/N WITH CAP PACKED IN T&R	TOOLED	NOT TOOLED	P/N WITH CAP PACKED IN TUBE	PEG	CKT SIZE	PLATING OPTIONS	DIM. M
87933-0422		X	-	N	04	1	1.65
87933-0438		X	-	N	04	2	1.65
87933-0439		X	-	N	04	3	1.65
87933-0440		X	-	N	04	4	1.65
87933-0446		X	-	N	04	5	1.65
87933-0441		X	-	N	04	1	1.91
87933-0442		X	-	N	04	2	1.91
87933-0443		X	-	N	04	3	1.91
87933-0444		X	-	N	04	4	1.91
87933-0448		X	-	N	04	5	1.91
87933-0425		X	-	N	04	1	3.05
87933-0426		X	-	N	04	2	3.05
87933-0427		X	-	N	04	3	3.05
87933-0428		X	-	N	04	4	3.05
87933-0424		X	-	N	04	5	3.05
87933-0622	X		87933-0607	N	06	1	1.65
87933-0638	X		87933-0608	N	06	2	1.65
87933-0639	X		87933-0609	N	06	3	1.65
87933-0640	X		87933-0610	N	06	4	1.65
87933-0646	X		87933-0645	N	06	5	1.65
87933-0641	X		87933-0611	N	06	1	1.91
87933-0642	X		87933-0612	N	06	2	1.91
87933-0643	X		87933-0613	N	06	3	1.91
87933-0644	X		87933-0614	N	06	4	1.91
87933-0648	X		87933-0647	N	06	5	1.91
87933-0625	X		87933-0615	N	06	1	3.05
87933-0626	X		87933-0616	N	06	2	3.05
87933-0627	X		87933-0617	N	06	3	3.05
87933-0628	X		87933-0618	N	06	4	3.05
87933-0624	X		87933-0623	N	06	5	3.05
87933-0822		X	87933-0807	N	08	1	1.65
87933-0838		X	87933-0808	N	08	2	1.65
87933-0839		X	87933-0809	N	08	3	1.65
87933-0840		X	87933-0810	N	08	4	1.65
87933-0846		X	87933-0845	N	08	5	1.65
87933-0841		X	87933-0811	N	08	1	1.91
87933-0842		X	87933-0812	N	08	2	1.91
87933-0843		X	87933-0813	N	08	3	1.91
87933-0844		X	87933-0814	N	08	4	1.91
87933-0848		X	87933-0847	N	08	5	1.91
87933-0825		X	87933-0815	N	08	1	3.05
87933-0826		X	87933-0816	N	08	2	3.05
87933-0827		X	87933-0817	N	08	3	3.05

P/N WITH CAP PACKED IN T&R	TOOLED	NOT TOOLED	P/N WITH CAP PACKED IN TUBE	P/N WITHOUT CAP PACKED IN T&R	PEG	CKT SIZE	PLATING OPTIONS	DIM. M
(C6) 87933-0828	X		87933-0818	-	N	08	4	3.05
87933-0824	X		87933-0823	-	N	08	5	3.05
87933-1022	X		87933-1007	-	N	10	1	1.65
87933-1038	X		87933-1008	-	N	10	2	1.65
87933-1039	X		87933-1009	-	N	10	3	1.65
87933-1040	X		87933-1010	-	N	10	4	1.65
87933-1046	X		87933-1045	-	N	10	5	1.65
87933-1041	X		87933-1011	-	N	10	1	1.91
87933-1042	X		87933-1012	-	N	10	2	1.91
87933-1043	X		87933-1013	-	N	10	3	1.91
87933-1044	X		87933-1014	-	N	10	4	1.91
87933-1048	X		87933-1047	-	N	10	5	1.91
87933-1025	X		87933-1015	-	N	10	1	3.05
87933-1026	X		87933-1016	-	N	10	2	3.05
87933-1021	X		87933-1017	-	N	10	3	3.05
87933-1028	X		87933-1018	87933-1058	N	10	4	3.05
87933-1024	X		87933-1023	-	N	10	5	3.05
87933-1237		X	87933-1252	-	N	12	1	1.65
87933-1238		X	87933-1258	-	N	12	2	1.65
87933-1239		X	87933-1259	-	N	12	3	1.65
87933-1240		X	87933-1260	-	N	12	4	1.65
87933-1246		X	87933-1245	-	N	12	5	1.65
87933-1241		X	87933-1261	-	N	12	1	1.91
87933-1242		X	87933-1262	-	N	12	2	1.91
87933-1243		X	87933-1263	-	N	12	3	1.91
87933-1244		X	87933-1264	-	N	12	4	1.91
87933-1248		X	87933-1247	-	N	12	5	1.91
87933-1225		X	87933-1219	-	N	12	1	3.05
87933-1229		X	87933-1220	-	N	12	2	3.05
87933-1227		X	87933-1221	-	N	12	3	3.05
87933-1232		X	87933-1222	-	N	12	4	3.05
87933-1224		X	87933-1223	-	N	12	5	3.05

THIS DRAWING CONTAINS INFORMATION THAT IS PROPRIETARY TO MOLEX ELECTRONIC TECHNOLOGIES, LLC AND SHOULD NOT BE USED WITHOUT WRITTEN PERMISSION

DIMENSION UNITS: mm | SCALE: NTS

GENERAL TOLERANCES (UNLESS SPECIFIED)

ANGULAR TOL	±	3.0 °
4 PLACES	±	
3 PLACES	±	
2 PLACES	±	0.2
1 PLACE	±	
0 PLACES	±	

DRAFT WHERE APPLICABLE MUST REMAIN WITHIN DIMENSIONS

CURRENT REV DESC:

EC NO: 799777
DRWN: SUAIFR 2024/09/19
CHK'D: SUAIFR 2024/10/01
APPR: MRAMAKRISHNA 2024/10/01

INITIAL REVISION:
DRWN: SCHEONG 2016/09/14
APPR: SCHEONG 2016/11/10

THIRD ANGLE PROJECTION | DRAWING: A3-SIZE | SERIES: 87933

molex

1.27MM PITCH SMT HEADER
WITH CAP PACKED IN TUBE

PRODUCT CUSTOMER DRAWING

DOCUMENT NUMBER	DOC TYPE	DOC PART	REVISION
SD-87933-0001	PSD	000	C6

MATERIAL NUMBER	CUSTOMER	SHEET NUMBER
SEE TABLE	GENERAL MARKET	3 OF 6

DOCUMENT STATUS	P1	RELEASE DATE	2024/10/01 05:56:12

FORMAT: master-SD-mc-A3
REVISION: J
DATE: 2020/01/16

P/N WITH CAP PACKED IN T&R	TOOLED	NOT TOOLED	P/N WITH CAP PACKED IN TUBE	PEG	CKT SIZE	PLATING OPTIONS	DIM. M
87933-1422		X	87933-1407	N	14	1	1.65
87933-1438		X	87933-1408	N	14	2	1.65
87933-1439		X	87933-1409	N	14	3	1.65
87933-1440		X	87933-1410	N	14	4	1.65
87933-1446		X	87933-1445	N	14	5	1.65
87933-1441		X	87933-1411	N	14	1	1.91
87933-1442		X	87933-1412	N	14	2	1.91
87933-1443		X	87933-1413	N	14	3	1.91
87933-1444		X	87933-1414	N	14	4	1.91
87933-1448		X	87933-1447	N	14	5	1.91
87933-1425		X	87933-1415	N	14	1	3.05
87933-1426		X	87933-1416	N	14	2	3.05
87933-1427		X	87933-1417	N	14	3	3.05
87933-1428		X	87933-1418	N	14	4	3.05
87933-1424		X	87933-1423	N	14	5	3.05
87933-1622		X	87933-1607	N	16	1	1.65
87933-1638		X	87933-1608	N	16	2	1.65
87933-1639		X	87933-1609	N	16	3	1.65
87933-1640		X	87933-1610	N	16	4	1.65
87933-1646		X	87933-1645	N	16	5	1.65
87933-1641		X	87933-1611	N	16	1	1.91
87933-1642		X	87933-1612	N	16	2	1.91
87933-1643		X	87933-1613	N	16	3	1.91
87933-1644		X	87933-1614	N	16	4	1.91
87933-1648		X	87933-1647	N	16	5	1.91
87933-1625		X	87933-1615	N	16	1	3.05
87933-1626		X	87933-1616	N	16	2	3.05
87933-1627		X	87933-1617	N	16	3	3.05
87933-1628		X	87933-1618	N	16	4	3.05
87933-1624		X	87933-1623	N	16	5	3.05
87933-1822		X	87933-1807	N	18	1	1.65
87933-1838		X	87933-1808	N	18	2	1.65
87933-1839		X	87933-1809	N	18	3	1.65
87933-1840		X	87933-1810	N	18	4	1.65
87933-1846		X	87933-1845	N	18	5	1.65
87933-1841		X	87933-1811	N	18	1	1.91
87933-1842		X	87933-1812	N	18	2	1.91
87933-1843		X	87933-1813	N	18	3	1.91
87933-1844		X	87933-1814	N	18	4	1.91
87933-1848		X	87933-1847	N	18	5	1.91
87933-1825		X	87933-1815	N	18	1	3.05
87933-1826		X	87933-1816	N	18	2	3.05
87933-1827		X	87933-1817	N	18	3	3.05

P/N WITH CAP PACKED IN T&R	TOOLED	NOT TOOLED	P/N WITH CAP PACKED IN TUBE	PEG	CKT SIZE	PLATING OPTIONS	DIM. M
87933-1828	X		87933-1818	N	18	4	3.05
87933-1824	X		87933-1823	N	18	5	3.05
87933-2037	X		87933-2007	N	20	1	1.65
87933-2038	X		87933-2008	N	20	2	1.65
87933-2039	X		87933-2009	N	20	3	1.65
87933-2040	X		87933-2010	N	20	4	1.65
87933-2046	X		87933-2045	N	20	5	1.65
87933-2041	X		87933-2011	N	20	1	1.91
87933-2042	X		87933-2012	N	20	2	1.91
87933-2043	X		87933-2013	N	20	3	1.91
87933-2044	X		87933-2014	N	20	4	1.91
87933-2048	X		87933-2047	N	20	5	1.91
87933-2025	X		87933-2015	N	20	1	3.05
87933-2026	X		87933-2016	N	20	2	3.05
87933-2027	X		87933-2017	N	20	3	3.05
87933-2021	X		87933-2018	N	20	4	3.05
87933-2024	X		87933-2023	N	20	5	3.05
87933-2237		X	87933-2207	N	22	1	1.65
87933-2238		X	87933-2208	N	22	2	1.65
87933-2239		X	87933-2209	N	22	3	1.65
87933-2240		X	87933-2210	N	22	4	1.65
87933-2246		X	87933-2245	N	22	5	1.65
87933-2241		X	87933-2211	N	22	1	1.91
87933-2242		X	87933-2212	N	22	2	1.91
87933-2243		X	87933-2213	N	22	3	1.91
87933-2244		X	87933-2214	N	22	4	1.91
87933-2248		X	87933-2247	N	22	5	1.91
87933-2225		X	87933-2215	N	22	1	3.05
87933-2226		X	87933-2216	N	22	2	3.05
87933-2227		X	87933-2217	N	22	3	3.05
87933-2228		X	87933-2218	N	22	4	3.05
87933-2224		X	87933-2223	N	22	5	3.05

DOCUMENT STATUS	P1	RELEASE DATE	2024/10/01 05:56:12

FORMAT: master_Sheet-A3
REVISION: J
DATE: 2020/01/1

THIS DRAWING CONTAINS INFORMATION THAT IS PROPRIETARY TO MOLEX ELECTRONIC TECHNOLOGIES, LLC AND SHOULD NOT BE USED WITHOUT WRITTEN PERMISSION

DIMENSION UNITS	SCALE
mm	NTS

GENERAL TOLERANCES (UNLESS SPECIFIED)

ANGULAR TOL	± 3.0 °
4 PLACES	±
3 PLACES	±
2 PLACES	± 0.2
1 PLACE	±
0 PLACES	±

DRAFT WHERE APPLICABLE MUST REMAIN WITHIN DIMENSIONS

CURRENT REV DESC:

EC NO: 799777
DRWN: SUAIFR 2024/09/19
CHK'D: SUAIFR 2024/10/01
APPR: MRAMAKRISHNA 2024/10/01

INITIAL REVISION:
DRWN: SCHEONG 2016/09/14
APPR: SCHEONG 2016/11/10

molex

1.27MM PITCH SMT HEADER
WITH CAP PACKED IN TUBE

PRODUCT CUSTOMER DRAWING

THIRD ANGLE PROJECTION	DRAWING	SERIES	MATERIAL NUMBER	CUSTOMER	SHEET NUMBER
	A3-SIZE	87933	SEE TABLE	GENERAL MARKET	4 OF 6

DOCUMENT NUMBER	DOC TYPE	DOC PART	REVISION
SD-87933-0001	PSD	000	C6

P/N WITH CAP PACKED IN T&R	TOOLED	NOT TOOLED	P/N WITH CAP PACKED IN TUBE	PEG	CKT SIZE	PLATING OPTIONS	DIM. M
87933-2437		X	87933-2407	N	24	1	1.65
87933-2438		X	87933-2408	N	24	2	1.65
87933-2439		X	87933-2409	N	24	3	1.65
87933-2440		X	87933-2410	N	24	4	1.65
87933-2446		X	87933-2445	N	24	5	1.65
87933-2441		X	87933-2411	N	24	1	1.91
87933-2442		X	87933-2412	N	22	2	1.91
87933-2443		X	87933-2413	N	24	3	1.91
87933-2444		X	87933-2414	N	24	4	1.91
87933-2448		X	87933-2447	N	24	5	1.91
87933-2425		X	87933-2415	N	24	1	3.05
87933-2426		X	87933-2416	N	24	2	3.05
87933-2427		X	87933-2417	N	24	3	3.05
87933-2428		X	87933-2418	N	24	4	3.05
87933-2424		X	87933-2423	N	24	5	3.05

THIS DRAWING CONTAINS INFORMATION THAT IS PROPRIETARY TO MOLEX ELECTRONIC TECHNOLOGIES, LLC AND SHOULD NOT BE USED WITHOUT WRITTEN PERMISSION

DIMENSION UNITS	SCALE
mm	NTS

GENERAL TOLERANCES (UNLESS SPECIFIED)

ANGULAR TOL	± 3.0 °
4 PLACES	±
3 PLACES	±
2 PLACES	± 0.2
1 PLACE	±
0 PLACES	±

DRAFT WHERE APPLICABLE MUST REMAIN WITHIN DIMENSIONS

CURRENT REV DESC:

EC NO: 799777
DRWN: SUAIFR 2024/09/19
CHK'D: SUAIFR 2024/10/01
APPR: MRAMAKRISHNA 2024/10/01

INITIAL REVISION:
DRWN: SCHEONG 2016/09/14
APPR: SCHEONG 2016/11/10

molex

1.27MM PITCH SMT HEADER
WITH CAP PACKED IN TUBE

PRODUCT CUSTOMER DRAWING

DOCUMENT NUMBER	DOC TYPE	DOC PART	REVISION
SD-87933-0001	PSD	000	C6

THIRD ANGLE PROJECTION	DRAWING	SERIES	MATERIAL NUMBER	CUSTOMER	SHEET NUMBER
	A3-SIZE	87933	SEE TABLE	GENERAL MARKET	5 OF 6

DOCUMENT STATUS	P1	RELEASE DATE	2024/10/01 05:56:12

FORMAT: master-lb-prod-A3
REVISION: J
DATE: 2020/01/14

BOARD TO BOARD (BTB) DISTANCE

HEADER	MATES WITH (RECEPTACLE)	BTB DIST.	PICTORIAL VIEW
87933	78120	7.57	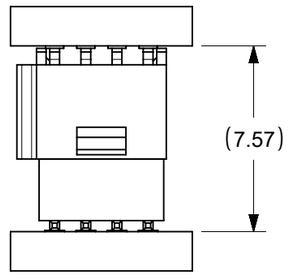

THIS DRAWING CONTAINS INFORMATION THAT IS PROPRIETARY TO MOLEX ELECTRONIC TECHNOLOGIES, LLC AND SHOULD NOT BE USED WITHOUT WRITTEN PERMISSION

DIMENSION UNITS	SCALE
mm	NTS

GENERAL TOLERANCES (UNLESS SPECIFIED)	
ANGULAR TOL	± 3.0 °
4 PLACES	±
3 PLACES	±
2 PLACES	± 0.2
1 PLACE	±
0 PLACES	±

DRAFT WHERE APPLICABLE MUST REMAIN WITHIN DIMENSIONS

CURRENT REV DESC:

EC NO: 799777
DRWN: SUAIFR 2024/09/19
CHK'D: SUAIFR 2024/10/01
APPR: MRAMAKRISHNA 2024/10/01

INITIAL REVISION:
DRWN: SCHEONG 2016/09/14
APPR: SCHEONG 2016/11/10

molex

1.27MM PITCH SMT HEADER
WITH CAP PACKED IN TUBE

PRODUCT CUSTOMER DRAWING

DOCUMENT NUMBER	DOC TYPE	DOC PART	REVISION
SD-87933-0001	PSD	000	C6

THIRD ANGLE PROJECTION	DRAWING	SERIES	MATERIAL NUMBER	CUSTOMER	SHEET NUMBER
	A3-SIZE	87933	SEE TABLE	GENERAL MARKET	6 OF 6

DOCUMENT STATUS	P1	RELEASE DATE	2024/10/01 05:56:12

FORMAT: master-lb-prod-A3
REVISION: J
DATE: 2020/01/14