LENGTH TABLE			
MATERIAL NO. (STANDARD)	NO. OF CIRCUITS	"B"	"A"
399200308	08	105.0 (4.134)	122 (4.79)

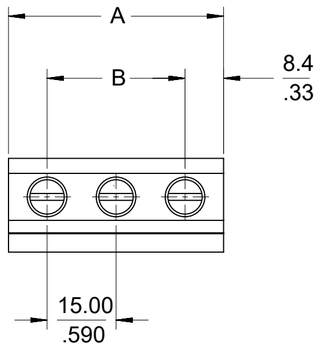

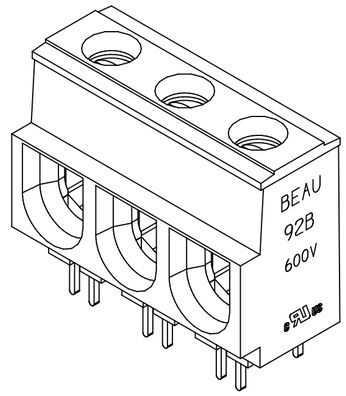

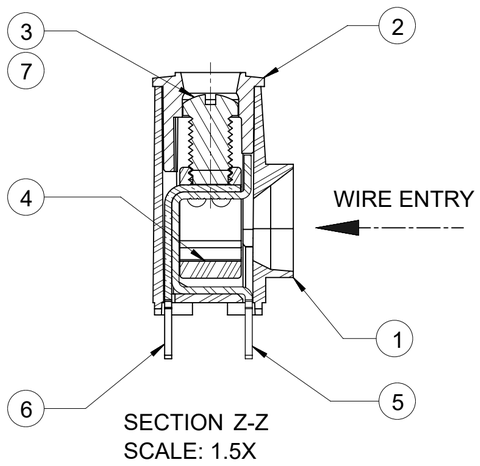

SECTION Z-Z
SCALE: 1.5X

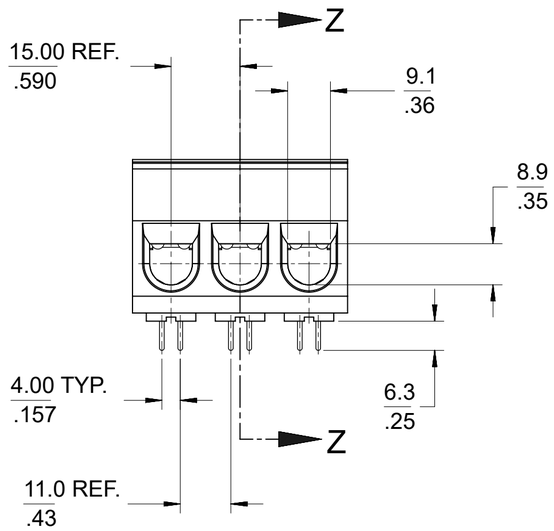

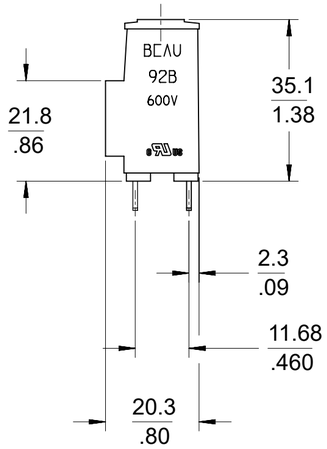

NOTES:

1. MATERIAL: SEE TABLE.
2. FINISHES: SEE TABLE.
3. PRODUCT SPECIFICATION: NOT REQUIRED.
4. PACKAGING: NOT REQUIRED.
5. MATES WITH: NONE.
6. ALL FEATURES ARE TYPICAL UNLESS OTHERWISE NOTED.
7. "XX" REFERS TO THE NUMBER OF CIRCUIT POSITIONS
8. DESIGNED TO MEET NEC & UL 1059 CLASS C 600 VOLTS
9. MULTIPLE TAIL DESIGN FOR LOWER PCB CURRENT DENSITIES
10. PROVEN PRESSURE CLAMP STYLE CONNECTION
11. AVAILABLE IN VARIOUS LENGTHS
12. WINDOW ACCEPTS 133/23 STRANDED #2 AWG, #3 AWG AND 19 STRAND #1 AWG

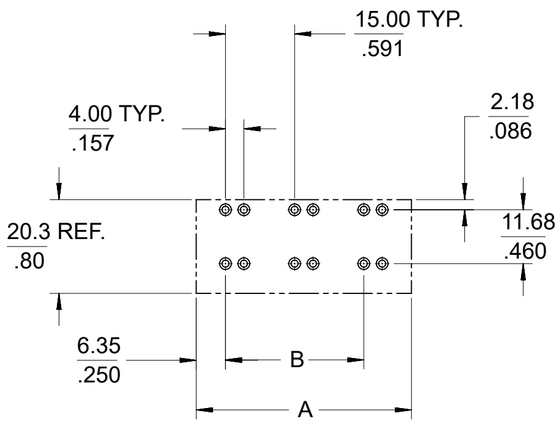

RECOMMENDED PTH PATTERN
∅1.52 (.060) MINIMUM FINISHED HOLE

SCALE 1:1

ITEM	QTY.	DESCRIPTION	MATERIAL	FINISH
7	"XX"	SCREW, 1/4-28, SLOTTED, ST. STEEL	STAINLESS STEEL	TIN
6	"XX"	OUTER TERMINAL	COPPER	TIN
5	"XX"	INNER TERMINAL	COPPER	TIN
4	"XX"	CAGE	BRASS	NICKEL
3	"XX"	SCREW, 1/4-28, SLOTTED, BRONZE	BRONZE	TIN
2	1	COVER	THERMOPLASTIC	BLACK
1	1	BODY	THERMOPLASTIC	BLACK

DOCUMENT STATUS | P1 | RELEASE DATE | 2025/12/01 13:33:58

THIS DRAWING CONTAINS INFORMATION THAT IS PROPRIETARY TO MOLEX ELECTRONIC TECHNOLOGIES, LLC AND SHOULD NOT BE USED WITHOUT WRITTEN PERMISSION

DIMENSION UNITS: MM/INCH | SCALE: 1:1

GENERAL TOLERANCES (UNLESS SPECIFIED)

	MM	INCH
4 PLACES	±	±
3 PLACES	±	± 0.005
2 PLACES	± 0.13	± 0.01
1 PLACE	± 0.3	±
0 PLACES	±	±
ANGULAR TOL	± 2.0 °	

DRAFT WHERE APPLICABLE MUST REMAIN WITHIN DIMENSIONS

CURRENT REV DESC: REMOVED OBSOLETED PART NUMBERS AS PER PCN#515988

EC NO: 840975
DRWN: SAMPRS 2025/11/14
CHK'D: GGA 2025/12/01
APPR: GGA 2025/12/01

INITIAL REVISION:
DRWN: RSTONE 2014/10/03
APPR: JFMURPHY 2014/10/23

THIRD ANGLE PROJECTION | DRAWING: C-SIZE | SERIES: 39220

molex

SR BTS #1-#8AWG 600V

PRODUCT CUSTOMER DRAWING

DOCUMENT NUMBER	DOC TYPE	DOC PART	REVISION
SD-39920-006	PSD	001	J3

MATERIAL NUMBER	CUSTOMER	SHEET NUMBER
SEE TABLE	GENERAL MARKET	1 OF 1

FORMAT: Eng-lega-master-lb-prod-C
REVISION: E1
DATE: 2021/05/01