MATERIALS AND FINISHES:

BODY, CENTER CONTACT: BRASS
FINISH: GOLD (5 µ-in MIN) OVER NICKEL PHOSPHOR (80 µ-in MIN)

INSULATOR: LCP

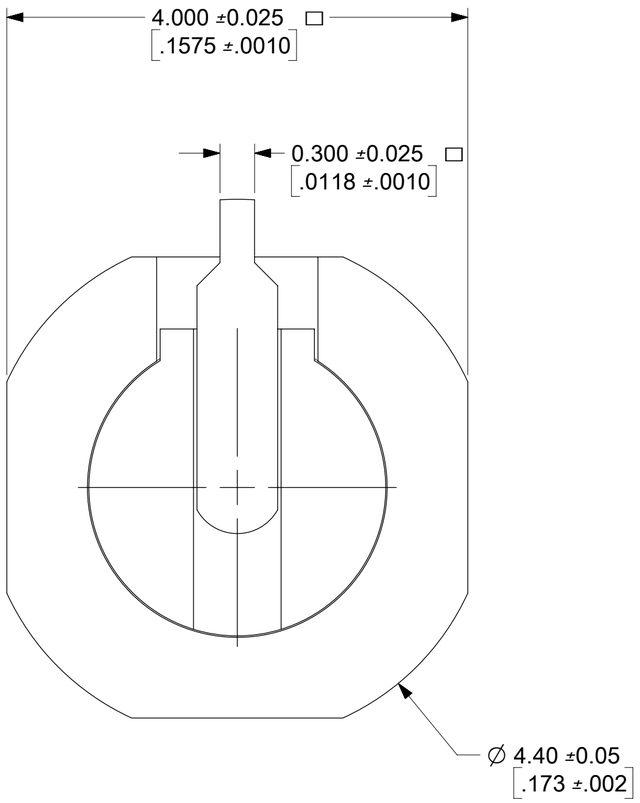

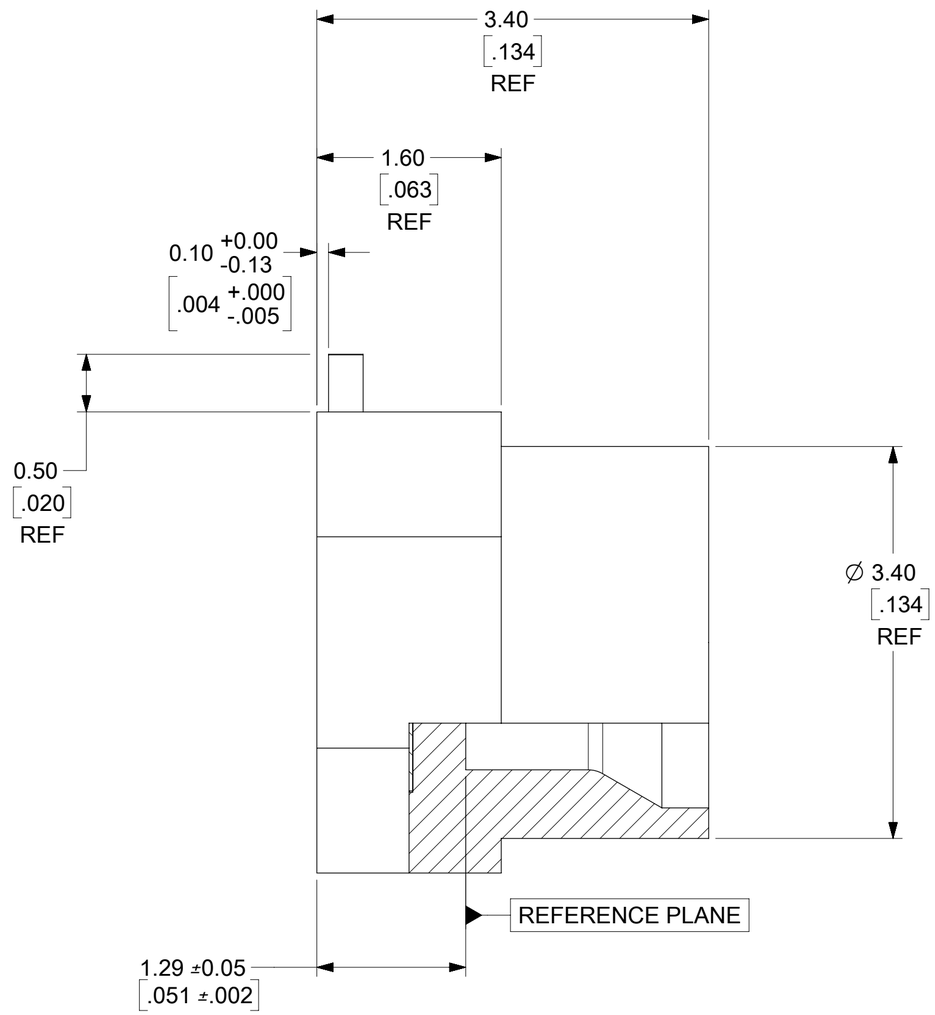

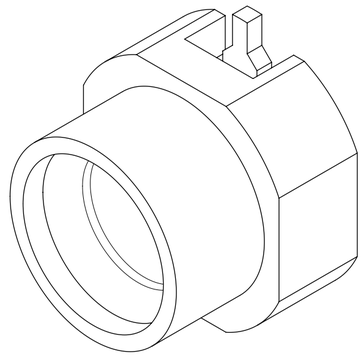

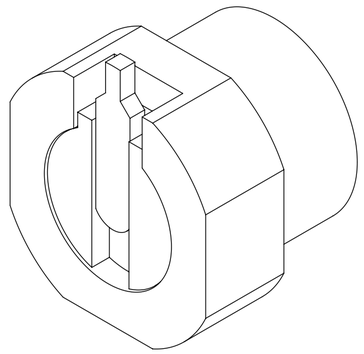

73300-0442	TAPE AND REEL WITH KAPTON TAPE
73300-0441	TAPE AND REEL (1500 PCS)
73300-0440	SMPM PLUG SMOOTH BORE INTERFACE (TRAY)
PART NO.	DESCRIPTION

MIL- STD-384B, FIG 328-3	INTERFACE
SPECIFICATION	DESCRIPTION

DOCUMENT STATUS	P1	RELEASE DATE	2019/12/05 14:20:26

SYMBOLS
EA = 0
EC = 0
EP = 0
S = 0
▼ = 0
C = 0
☒ = 0
■ = 0
▽ = 0

THIS DRAWING CONTAINS INFORMATION THAT IS PROPRIETARY TO MOLEX ELECTRONIC TECHNOLOGIES, LLC AND SHOULD NOT BE USED WITHOUT WRITTEN PERMISSION

DIMENSION UNITS: MM/IN
SCALE: NTS

GENERAL TOLERANCES (UNLESS SPECIFIED)

	MM	INCH
4 PLACES	±	±
3 PLACES	±	±
2 PLACES	±	±
1 PLACE	±	±
0 PLACES	±	±
ANGULAR TOL	± 2.0 °	

DRAFT WHERE APPLICABLE MUST REMAIN WITHIN DIMENSIONS

CURRENT REV DESC:

EC NO: 627990
DRWN: SSSHAH 2019/11/14
CHK'D: BSHAH 2019/12/04
APPR: AROBERTSON 2019/12/05

INITIAL REVISION:
DRWN: JLEE02 2014/06/03
APPR: WSPINK 2014/09/04

THIRD ANGLE PROJECTION | DRAWING: C-SIZE | SERIES: 73300

molex

SMPM PLUG, SMT SB PCB
VERTICAL 50 OHM EWR-13431, SMPM-PCB/SMT

PRODUCT CUSTOMER DRAWING

DOCUMENT NUMBER	DOC TYPE	DOC PART	REVISION
SD-73300-044	PSD	001	A5

MATERIAL NUMBER	CUSTOMER	SHEET NUMBER
SEE TABLE		1 OF 2

FORMAT: Eng-tega-master-tb-prod-C
REVISION: D
DATE: 2018/01/18

PCB CONNECTOR LAUNCH / PAD (FOR REFERENCE ONLY)

ALL HATCHED SURFACES SHOWN BELOW ARE COPPER (Cu)

MOUNTING & SIGNAL LAYER
(LAYER 1)

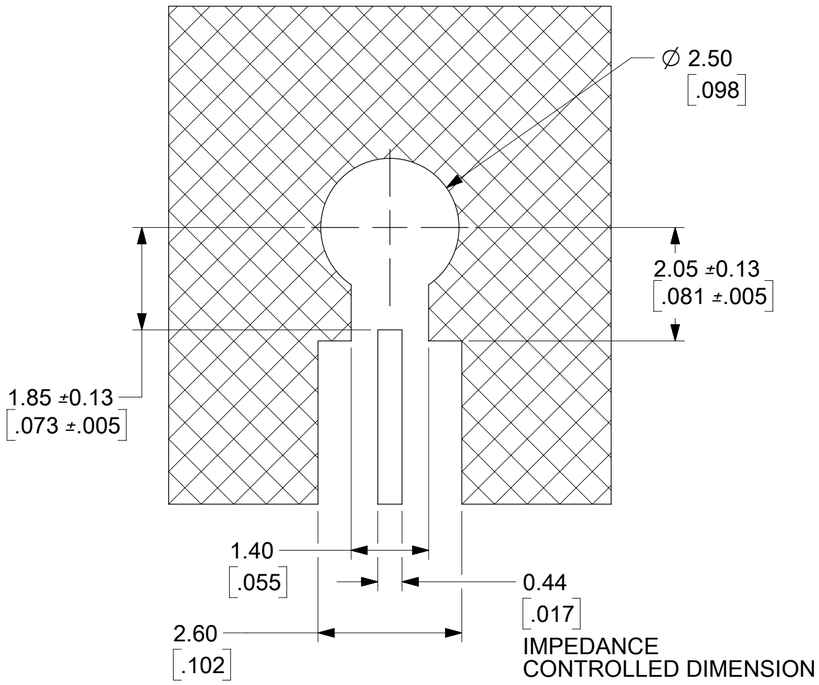

REFERENCE LAYER
(LAYER 2)

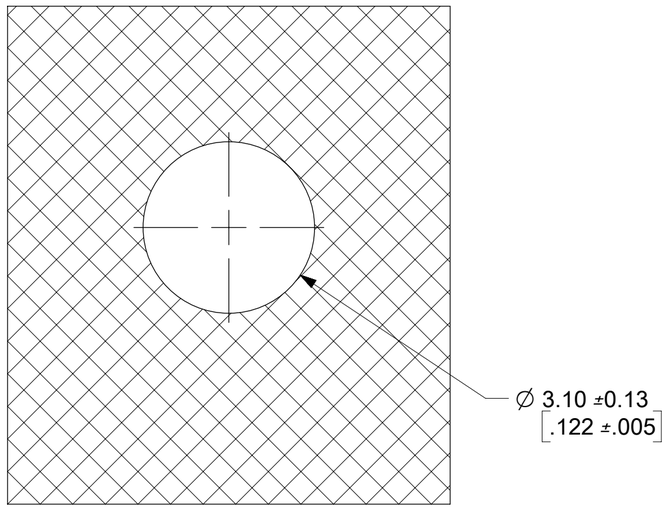

SUBSEQUENT LAYERS

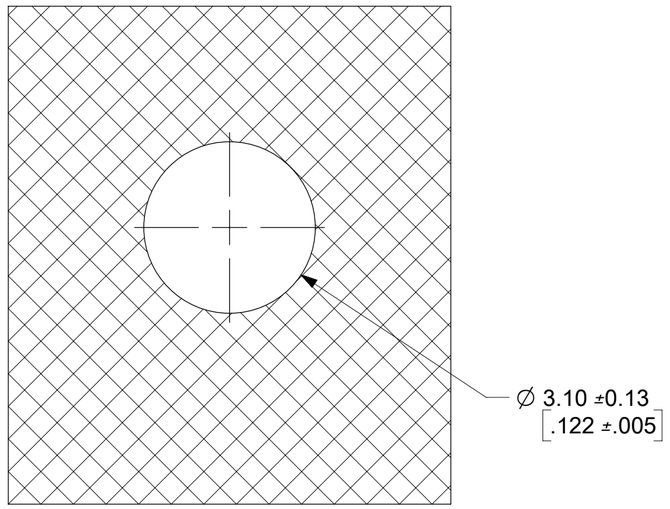

PCB STACK UP

LAYER	MATERIAL	Dk	THICKNESS (mil)
1	Copper + PLATING		2.1
	FR4	4.3	10.0
2	Copper		0.6
	FR4	4.3	10.0
3	Copper		0.6
	FR4	4.3	10.0
4*	Copper		0.6

* SUBSEQUENT LAYERS MAY BE ADDED AS REQUIRED FOR INDIVIDUAL APPLICATIONS

TYPICAL PERFORMANCE CHARACTERISTICS WITH CONNECTOR AND PCB LAUNCH SHOWN

VSWR (FULLY MATED)	FREQUENCY BAND
1.4	DC TO 18 GHz

VARYING PCB STACKUPS AND PCB LAUNCH WILL RESULT IN VARYING RESULTS
CONTACT MOLEX RF / MICROWAVE FOR APPLICATION SPECIFIC ASSISTANCE

VIAS AND DRILL HOLE

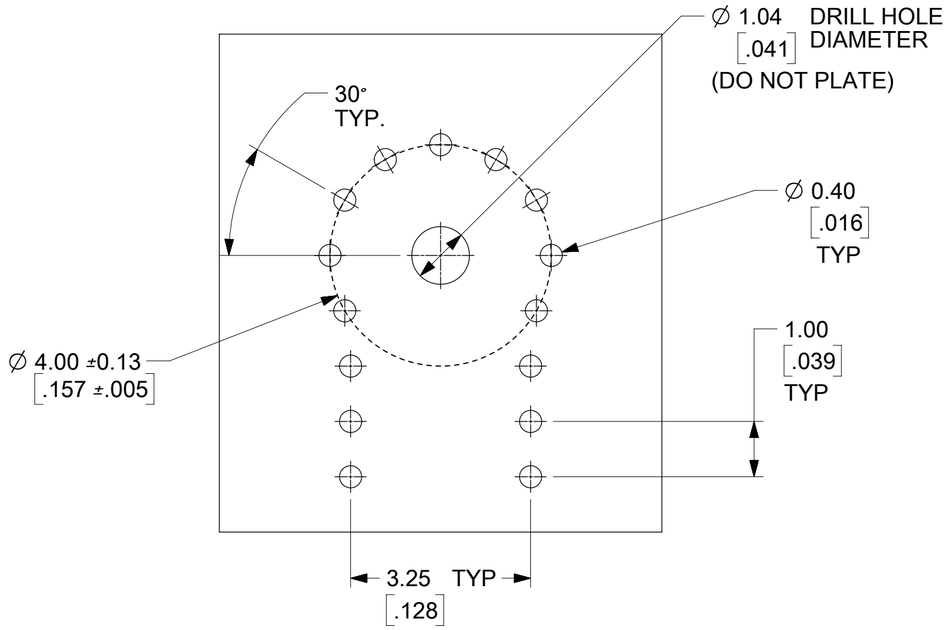

SOLDER MASK

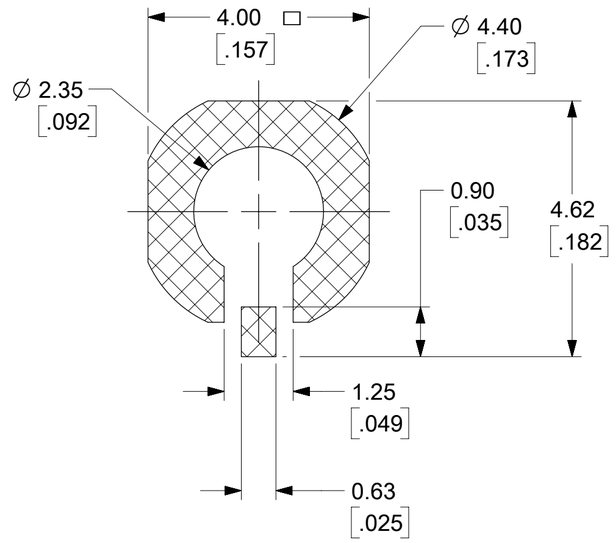

SYMBOLS	
FA	= 0
FC	= 0
FB	= 0
S	= 0
	= 0
C	= 0
	= 0
	= 0
V	= 0

THIS DRAWING CONTAINS INFORMATION THAT IS PROPRIETARY TO MOLEX ELECTRONIC TECHNOLOGIES, LLC AND SHOULD NOT BE USED WITHOUT WRITTEN PERMISSION

DIMENSION UNITS: MM/IN | SCALE: NTS

GENERAL TOLERANCES (UNLESS SPECIFIED)

	MM	INCH
4 PLACES	±	±
3 PLACES	±	±
2 PLACES	±	±
1 PLACE	±	±
0 PLACES	±	±
ANGULAR TOL	± 2.0 °	

DRAFT WHERE APPLICABLE MUST REMAIN WITHIN DIMENSIONS

CURRENT REV DESC:

EC NO: 627990
DRWN: SSSHAH 2019/11/14
CHK'D: BSHAH 2019/12/04
APPR: AROBERTSON 2019/12/05

INITIAL REVISION:
DRWN: JLEE02 2014/06/03
APPR: WSPINK 2014/09/04

THIRD ANGLE PROJECTION | DRAWING: C-SIZE | SERIES: 73300

molex

SMPM PLUG, SMT SB PCB
VERTICAL 50 OHM EWR-13431, SMPM-PCB/SMT

PRODUCT CUSTOMER DRAWING

DOCUMENT NUMBER	DOC TYPE	DOC PART	REVISION
SD-73300-044	PSD	001	A5

MATERIAL NUMBER: SEE TABLE | CUSTOMER | SHEET NUMBER: 2 OF 2

DOCUMENT STATUS	P1	RELEASE DATE	2019/12/05 14:20:26

FORMAT: Eng-tega-master-tb-prod-C
REVISION: D
DATE: 2018/01/18