INVERTED PROFILE MAGNETIC JACK
FAST ETHERNET W/LED

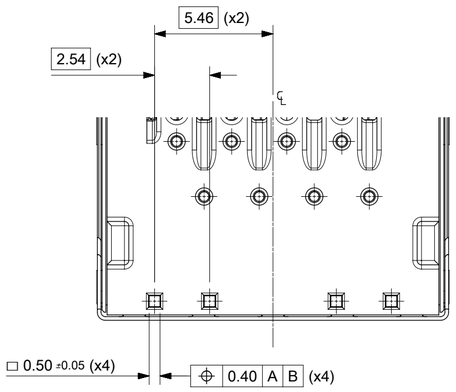

DETAIL A
SCALE 5:1

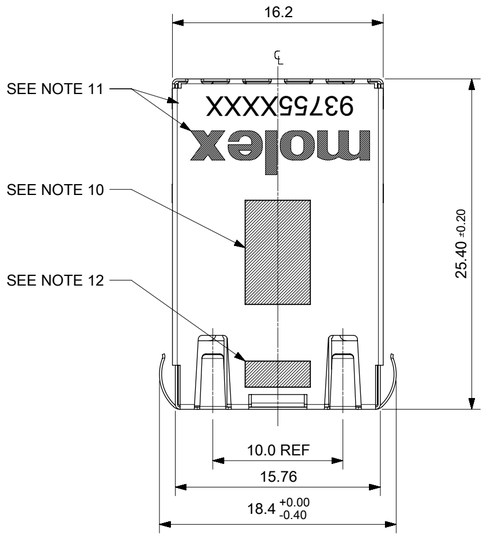

NOTES:
1 - SHIELD MATERIAL: 0.17 mm THICK BRASS PRE-PLATED WITH NICKEL.
SOLDER TABS POST DIPPED WITH MIN. 1.27 µm TIN
2 - HOUSING MATERIAL: LCP, BLACK, UL 94V-0.
3 - TERMINALS MATERIAL: PHOSPHOR BRONZE.
RJ45 CONTACT PLATING: BASE NICKEL, GOLD FLASH OVER PALLADIUM NICKEL.
PHY SOLDER TAILS: COPPER ALLOY.
4 - MATING INTERFACE ACCORDING TO IEC 60603-7 & TIA-1096-A.
5 - PRODUCT SPECIFICATION: 934620001 PSP.
6 - PACKAGING SPECIFICATION: 934620002 PSK TAPE AND REEL.
7 - STAND OFF TO SYSTEM BOARD 0.30 mm MIN.
8 - RECOMMENDED PCB THICKNESS: 1.57 mm REF.
9 - SHIELD: AVOID ROUTING TRACES
OR PLACING ANY VIAS BELOW THESE AREAS.
10 - AREA FOR PICK AND PLACE: 5.0 mm x 8.0 mm
11 - INSCRIPTION MARKED BY LASER:
1st : MOLEX
2nd : P/N (SEE BOM)
12 - INSCRIPTION MARKED BY LASER:
DATE CODE(DAY/WEEK/YEAR)
13 - MATERIAL COMPLIANT TO RoHS DIRECTIVE 2002/95/EC

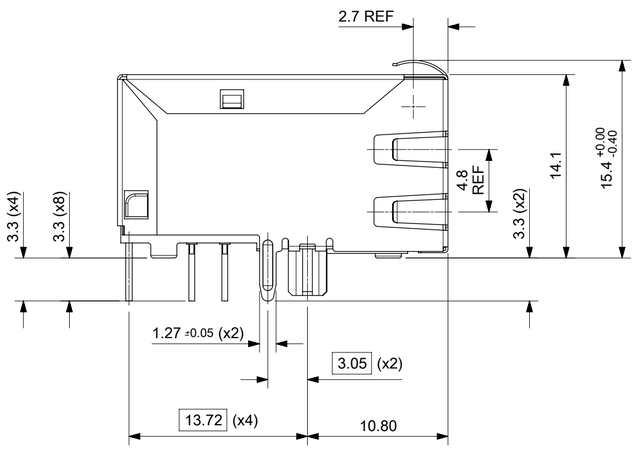

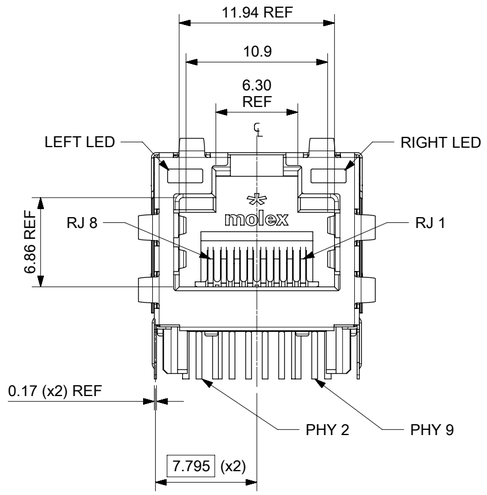

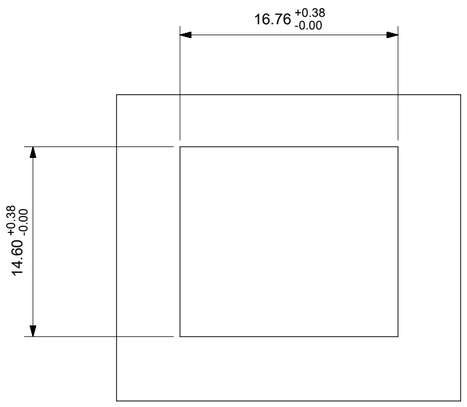

SUGGESTED PANEL CUT OUT

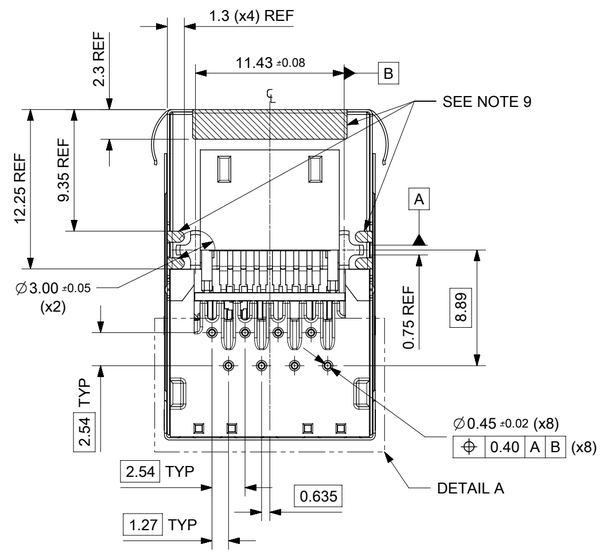

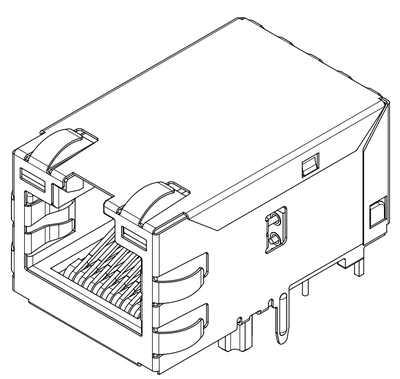

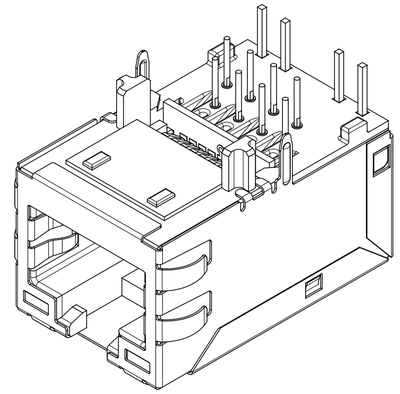

THIS DRAWING CONTAINS INFORMATION THAT IS PROPRIETARY TO MOLEX ELECTRONIC TECHNOLOGIES, LLC AND SHOULD NOT BE USED WITHOUT WRITTEN PERMISSION

UPDATED MAGBOX + 2KV 2017/06/06
EC NO: 117810 2017/06/12
DRWN: SBRENNAN 2017/06/12
CHK'D: DBYRNES
APPR: STGRIFFIN

GENERAL TOLERANCES (UNLESS SPECIFIED)

ANGULAR TOL ±	2.0 °
4 PLACES	±
3 PLACES	±
2 PLACES	± 0.1
1 PLACE	± 0.2
0 PLACES	±

DRAFT WHERE APPLICABLE MUST REMAIN WITHIN DIMENSIONS

REV: B1

DIMENSION UNITS: MM
SCALE: 3:1
DRWN BY: DBYRNES DATE: 2015/11/20
CHK'D BY: DBYRNES DATE: 2016/09/19
APPR BY: STGRIFFIN DATE: 2016/09/23
DRAWING SIZE: A2
THIRD ANGLE PROJECTION

molex®

1" MXMAG 4 CORE FE IND

PRODUCT CUSTOMER DRAWING

SERIES	MATERIAL NUMBER	CUSTOMER
93755	SEE TABLE ON SHEET 2	GENERAL MARKET

DOCUMENT NUMBER	DOC TYPE	DOC PART	SHEET NUMBER
937550002	PSD	000	1 OF 3

RELEASE STATUS	P1	RELEASE DATE	12.06.2017	14:58:05

FORMAT: master-tb-prod-A2
REVISION: G
DATE: 2017/02/06

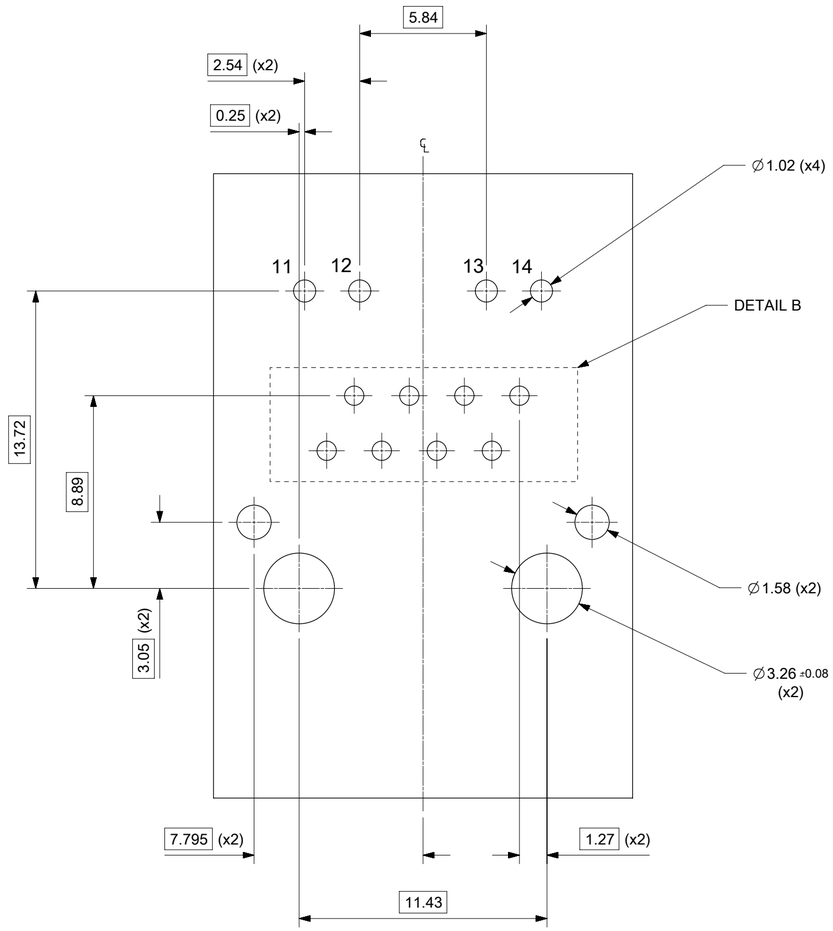

SUGGESTED BOARD LAYOUT
FAST ETHERNET
VIEW FROM COMPONENT SIDE
ALL DIMS ARE REFERENCE

PART NUMBER	LEFT LED	RIGHT LED
937555226	GREEN	YELLOW
937555225	GREEN	GREEN/YELLOW

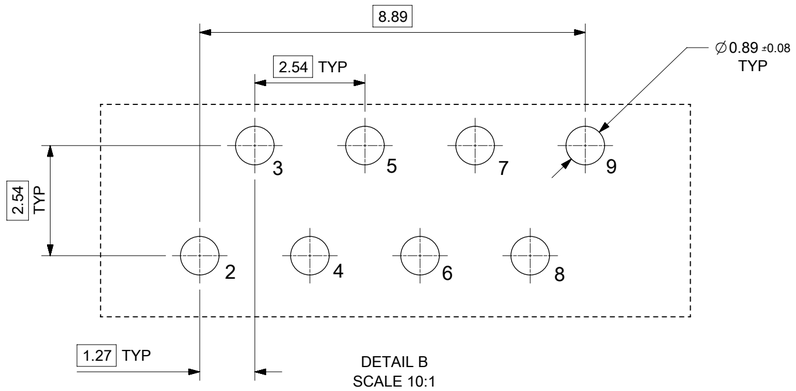

DETAIL B
SCALE 10:1

PIN CONFIGURATION
FOR FAST ETHERNET

THIS DRAWING CONTAINS INFORMATION THAT IS PROPRIETARY TO MOLEX ELECTRONIC TECHNOLOGIES, LLC AND SHOULD NOT BE USED WITHOUT WRITTEN PERMISSION

UPDATED MAGBOX + 2KV 2017/06/06
EC NO: 117810 2017/06/12
DRWN: SBRENNAN 2017/06/12
CHK'D: DBYRNES
APPR: STGRIFFIN

GENERAL TOLERANCES (UNLESS SPECIFIED)

ANGULAR TOL ±	2.0	°
4 PLACES	±	
3 PLACES	±	
2 PLACES	±	0.1
1 PLACE	±	0.2
0 PLACES	±	

DRAFT WHERE APPLICABLE MUST REMAIN WITHIN DIMENSIONS

REV: B1

DIMENSION UNITS: MM
SCALE: 5:1
DRWN BY: DBYRNES DATE: 2015/11/20
CHK'D BY: DBYRNES DATE: 2016/09/19
APPR BY: STGRIFFIN DATE: 2016/09/23
DRAWING SIZE: A2
THIRD ANGLE PROJECTION

molex®

1" MXMAG 4 CORE FE IND

PRODUCT CUSTOMER DRAWING

SERIES	MATERIAL NUMBER	CUSTOMER
93755	SEE TABLE ON SHEET 2	GENERAL MARKET

DOCUMENT NUMBER	DOC TYPE	DOC PART	SHEET NUMBER
937550002	PSD	000	2 OF 3

RELEASE STATUS	P1	RELEASE DATE	12.06.2017 14:58:05

FORMAT: master-tb-prod-A2
REVISION: G
DATE: 2017/02/06

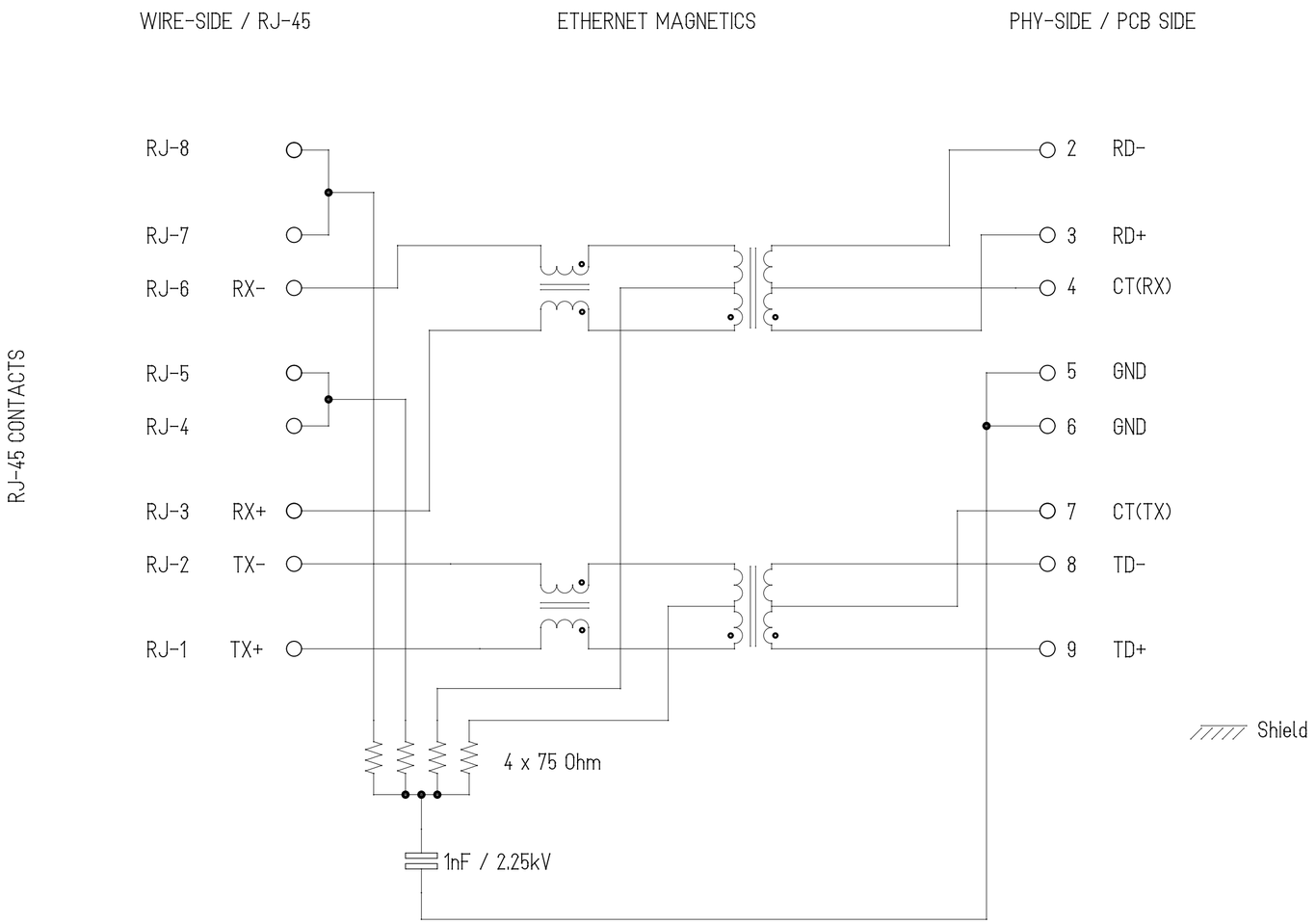

Description	Value	
OCL @100 kHz, 0.1 V, 8 mA DC bias (-40°c to +85°C)	350 µH min.	
OCL @100 kHz, 0.1 V, 8 mA DC bias (25°C)		
Turns ratio	1CT:1CT	
Transmission characteristics @ 25°C, all four pairs		
Insertion Loss		
Frequency (MHz)	Limits (dB max.)	Typical Values (dB max.)
1.0-9.9 MHz	0.4+0.1*log(F)	0.5 @ 10 MHz
10-49.9 MHz	0.5+0.3*log(F/10)	0.7 @ 50 MHz
50-79.9 MHz	1+1.4*log(F/80)	1.0 @ 80 MHz
80-100 MHz	1.3+3*log(F/100)	1.3 @ 100 MHz
Return Loss		
Frequency (MHz)	Limits (dB min.)	Typical Values (dB min.)
1.0-39.9 MHz	18	18 @ 40 MHz
40-100 MHz	12-20*log(F/80)	10 @ 100 MHz
CMR		
Frequency (MHz)	Limits (dB min.)	Typical Values (dB min.)
1.0-100 MHz	30	30 @ 100 MHz
Next		
Frequency (MHz)	Limits (dB min.)	Typical Values (dB min.)
1.0-39.9 MHz	35	35 @ 40 MHz
40-100 MHz	33-20*log(F/50)	27 @ 100 MHz
Isolation PHY to wire side	2.25 kVDC / 60 s	

937555226

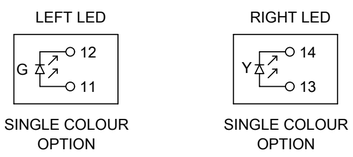

937555225

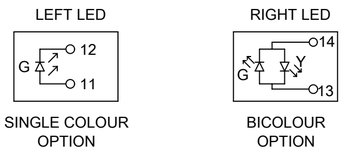

THIS DRAWING CONTAINS INFORMATION THAT IS PROPRIETARY TO MOLEX ELECTRONIC TECHNOLOGIES, LLC AND SHOULD NOT BE USED WITHOUT WRITTEN PERMISSION

UPDATED MAGBOX + 2KV 2017/06/06
EC NO: 117810 2017/06/12
DRWN: SBRENNAN 2017/06/12
CHK'D: DBYRNES
APPR: STGRIFFIN

GENERAL TOLERANCES (UNLESS SPECIFIED)
ANGULAR TOL ± 2.0 °
4 PLACES ±
3 PLACES ±
2 PLACES ± 0.1
1 PLACE ± 0.2
0 PLACES ±
DRAFT WHERE APPLICABLE MUST REMAIN WITHIN DIMENSIONS

REV: B1

DIMENSION UNITS: MM
SCALE: 1:1
DRWN BY: DBYRNES DATE: 2015/11/20
CHK'D BY: DBYRNES DATE: 2016/09/19
APPR BY: STGRIFFIN DATE: 2016/09/23
DRAWING SIZE: A2
THIRD ANGLE PROJECTION

molex®

1" MXMAG 4 CORE FE IND

PRODUCT CUSTOMER DRAWING

SERIES	MATERIAL NUMBER	CUSTOMER
93755	SEE TABLE ON SHEET 2	GENERAL MARKET

DOCUMENT NUMBER	DOC TYPE	DOC PART	SHEET NUMBER
937550002	PSD	000	3 OF 3

RELEASE STATUS	P1	RELEASE DATE	12.06.2017 14:58:05

FORMAT: master-b-prod-A2
REVISION: G
DATE: 2017/02/06

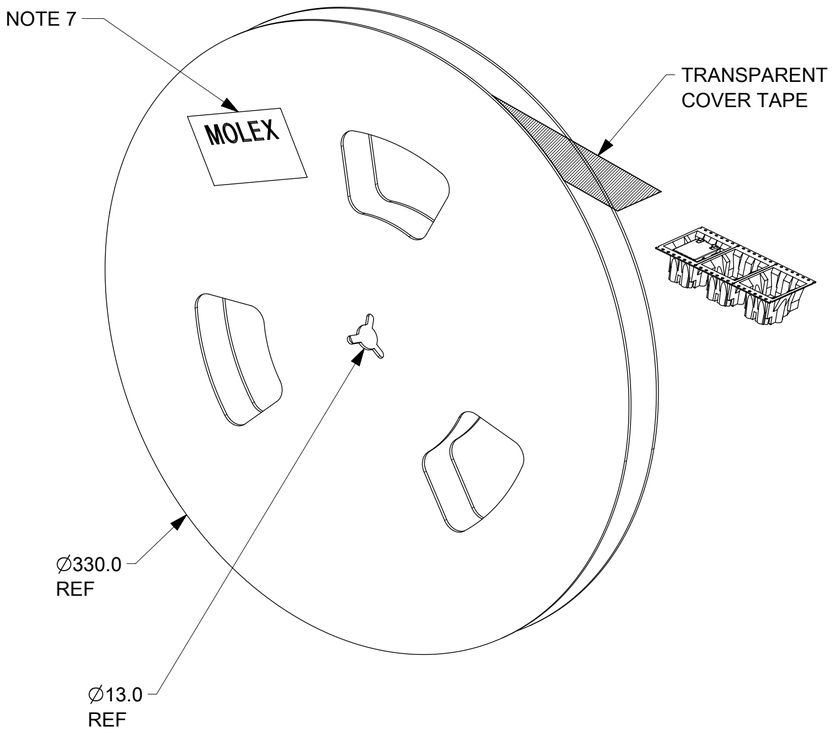

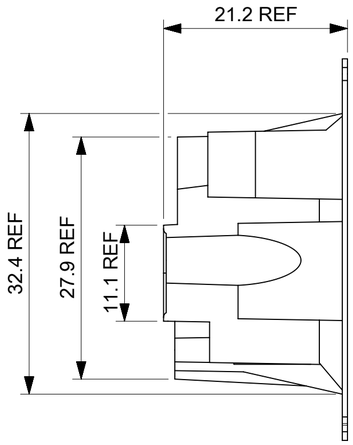

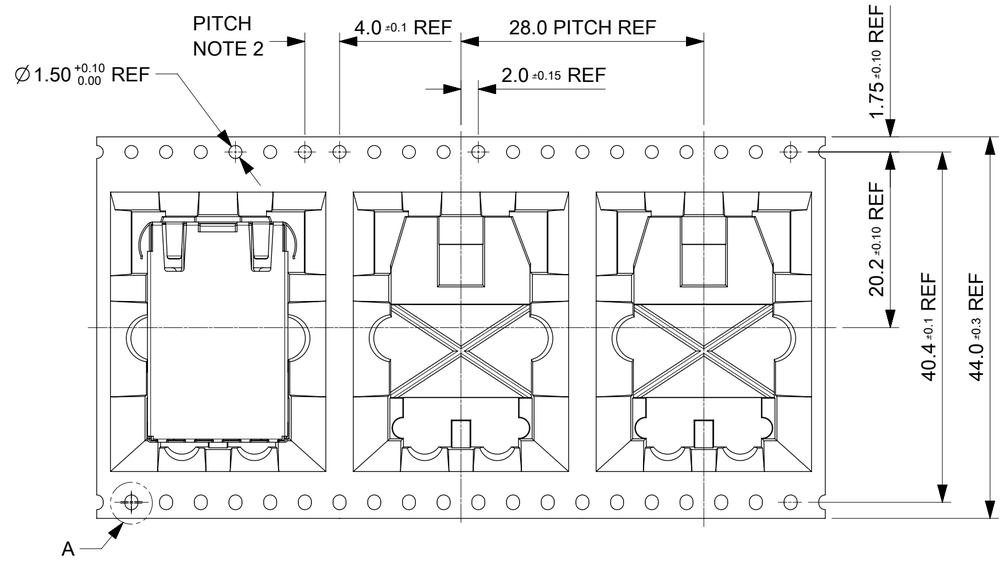

DIRECTION OF UNREELING

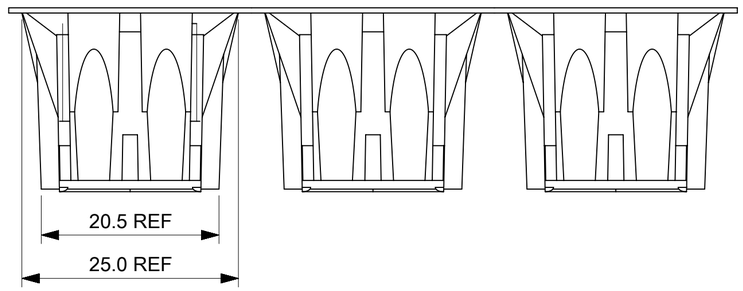

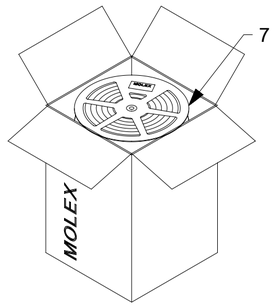

7 REELS/CARTON

TO CUSTOMER
ASSEMBLY MACHINE

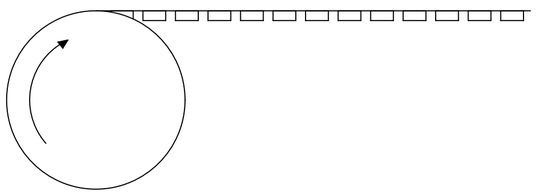

MOLEX REEL

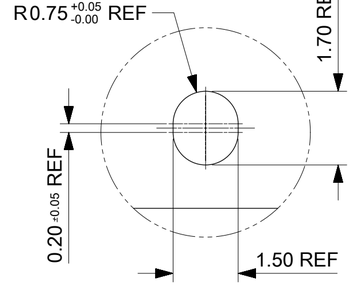

DETAIL A
SCALE 10:1

BLISTER TAPE PART NO	PIECES/REEL	PIECES/CARTON	REELS/CARTON
990449058	107	749	7

NOTES:
1 - MATERIAL:
CARRIER TAPE: VOLUME CONDUCTIVE POLYSTYRENE, 0.60 mm REF THICK, BLACK.
COVER TAPE: COLD SEAL POLYESTER, 0.06 mm REF THICK TRANSPARENT.
2 - PITCH TOLERANCE OVER ANY 10 PITCHES ± 0.2 mm
3 - PEEL FORCE OF COVER TAPE IS 0.1 N TO 1.3 N
AT A MAXIMUM SPEED OF 300 mm/min ± 10 mm/min
4 - PACKAGING SPECIFICATION: 934620002 PSK.
5 - REFERENCE TO IEC 60286-3 EXCEPT WHERE NOTED
6 - LABELS SHALL BE PLACED ON THE EACH REEL AND ON THE CARTON
7 - THE LABEL ON THE REEL SHALL BE PLACED ON THE OUTSIDE OF THE FLANGE
OPPOSITE THE ROUND SPROCKET HOLES
8 - ALL DIMENSIONS ARE REFERENCE ONLY

THIS DRAWING CONTAINS INFORMATION THAT IS PROPRIETARY TO MOLEX ELECTRONIC TECHNOLOGIES, LLC AND SHOULD NOT BE USED WITHOUT WRITTEN PERMISSION

DIMENSION UNITS	SCALE
mm	1:2

GENERAL TOLERANCES (UNLESS SPECIFIED)

ANGULAR TOL	± 2.0 °
4 PLACES	±
3 PLACES	±
2 PLACES	± 0.1
1 PLACE	± 0.2
0 PLACES	±

DRAFT WHERE APPLICABLE MUST REMAIN WITHIN DIMENSIONS

CURRENT REV DESC: ORIGINAL RELEASE

EC NO: 624501
DRWN: DSHEA 2019/09/19
CHK'D: DBYRNES 2019/09/26
APPR: DBYRNES 2019/09/26

INITIAL REVISION:
DRWN: DSHEA 2019/09/19
APPR: DBYRNES 2019/09/26

molex

MXMAG ONE INCH TAPE & REEL
BLISTER PACKAGING

PRODUCT CUSTOMER DRAWING

DOCUMENT NUMBER	DOC TYPE	DOC PART	REVISION
990449058	PSD	K	A

THIRD ANGLE PROJECTION	DRAWING	SERIES	MATERIAL NUMBER	CUSTOMER	SHEET NUMBER
	A2-SIZE	99044	990449058	GENERAL MARKET	1 OF 1

DOCUMENT STATUS	P1	RELEASE DATE	2019/09/26 09:14:35

FORMAT: master-tb-prod-A2
REVISION: H
DATE: 2018/01/18