

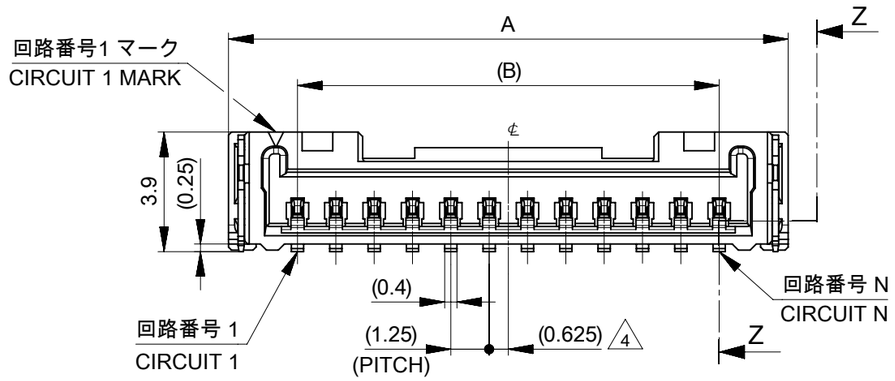

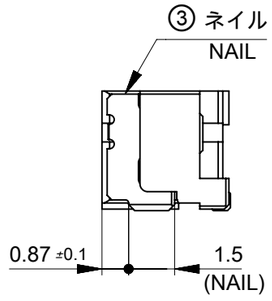

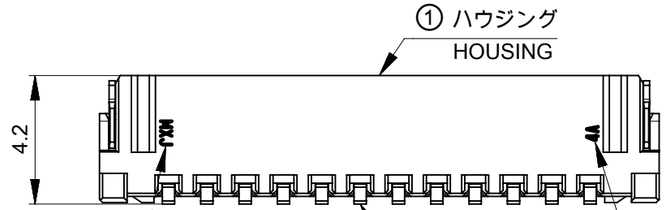

SECTION Z-Z

奇数キャビティ：キャビティ番号及び金型番号
偶数キャビティ：トレードマーク
ODD CAVITY:CAVITY AND MOLD NO.
EVEN CAVITY:TRADE MARK

奇数キャビティ：トレードマーク
偶数キャビティ：キャビティ番号及び金型番号
ODD CAVITY:TRADE MARK
EVEN CAVITY:CAVITY AND MOLD NO.

△1 TABLE 1

番号 NO.	部品 PART	材質 MATERIAL
①	ハウジング HOUSING	ポリアミド(PA), ガラス充填, UL94 V-0, 色：SHEET 5参照 POLYAMIDE (PA), GLASS FILLED, UL94 V-0, COLOR : SEE SHEET 5
②	ターミナル TERMINAL	黄銅 BRASS
		錫ビスマスめっき：1.0 MICROMETER MINIMUM TIN-BISMUTH PLATING
		ニッケルめっき(下地全面) : 1.0 MICROMETER MINIMUM NICKEL (UNDER-PLATING OVERALL)
③	ネイル NAIL	黄銅 BRASS
		錫めっき：1.0 MICROMETER MINIMUM MATTE TIN PLATING
		ニッケルめっき(下地全面) : 1.0 MICROMETER MINIMUM NICKEL (UNDER-PLATING OVERALL)

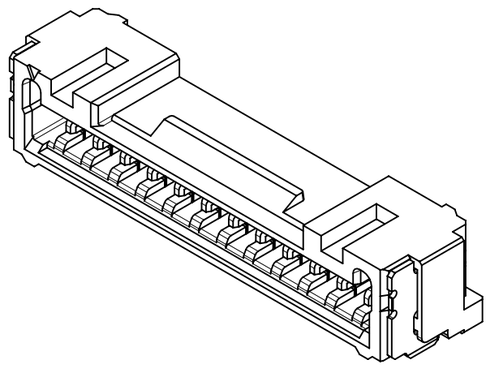

注記：
NOTES :

△1 材料及び仕上げ(めっき仕様)：TABLE 1, TABLE2 参照
MATERIAL AND FINISHES (PLATING SPECIFICATION) : SEE TABLE 1, TABLE2.

△2 製品仕様書、コネクタ取扱説明書、適合嵌合相手、適合リテーナーはSHEET 5をご参照下さい。
PLEASE REFER TO SHEET 5 FOR PRODUCT SPECIFICATION, APPLICATION SPECIFICATION, MATE WITH AND APPLICABLE RETAINER.

3. 端子テール部 及び ネイルの平坦度：0.1 MAXIMUM
TAIL AND NAIL COPLANARITY TO BE 0.1 MAXIMUM

△4 偶数極に適合
APPLY TO EVEN CIRCUIT

△5 発注番号：SHEET 5 参照
ORDER NUMBER : PLEASE REFER TO SHEET 5

505567**7*

極数 CIRCUIT SIZE

番号 NO.	ハウジングカラー HOUSING COLOR
0	ナチュラル (ベージュ) NATURAL(BEIGE)
1	黒 BLACK
2	赤 RED
3	黄 YELLOW
4	青 BLUE
6	緑 GREEN
8	橙 ORANGE

22.2	18.75	23.25	16
20.95	17.5	22	15
19.7	16.25	20.75	14
18.45	15	19.5	13
17.2	13.75	18.25	12
15.95	12.5	17	11
14.7	11.25	15.75	10
13.45	10	14.5	9
12.2	8.75	13.25	8
10.95	7.5	12	7
9.7	6.25	10.75	6
8.45	5	9.5	5
7.2	3.75	8.25	4
5.95	2.5	7	3
4.7	1.25	5.75	2
C	B	A	極数 CIRCUIT SIZE

THIS DRAWING CONTAINS INFORMATION THAT IS PROPRIETARY TO MOLEX ELECTRONIC TECHNOLOGIES, LLC AND SHOULD NOT BE USED WITHOUT WRITTEN PERMISSION

DIMENSION UNITS: mm | SCALE: NTS

GENERAL TOLERANCES (UNLESS SPECIFIED)

ANGULAR TOL	±	3.0 °
4 PLACES	±	0.2
3 PLACES	±	0.2
2 PLACES	±	0.2
1 PLACE	±	0.2
0 PLACES	±	0.2

DRAFT WHERE APPLICABLE MUST REMAIN WITHIN DIMENSIONS

CURRENT REV DESC: REMOVED OBSOLETED PART NUMBERS AS PER PCN#515932.

EC NO: 812554
DRWN: RAVINR1 2025/01/28
CHK'D: GGA 2025/02/25
APPR: GGA 2025/02/25

INITIAL REVISION:
DRWN: RWATANABE01 2017/11/24
APPR: TKANEKO 2017/12/06

THIRD ANGLE PROJECTION | DRAWING: A3-SIZE | SERIES: 505567

molex

MICRO-LOCK PLUS 1.25 W/B
SINGLE ROW RIGHT ANGLE SMT PLUG ASSEMBLY
TIN-BISMUTH PLATING

PRODUCT CUSTOMER DRAWING

DOCUMENT NUMBER	DOC TYPE	DOC PART	REVISION
5055670000-SD	PSD	000	D1

MATERIAL NUMBER	CUSTOMER	SHEET NUMBER
SEE TABLE	GENERAL	1 OF 5

DOCUMENT STATUS	P1	RELEASE DATE	2025/02/25 06:03:53

FORMAT: master-tb-prod-A3
REVISION: J1
DATE: 2021/05/01

製品形状
PRODUCT SHAPE

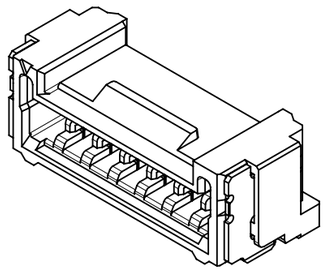

2-11極
2-11 CIRCUIT

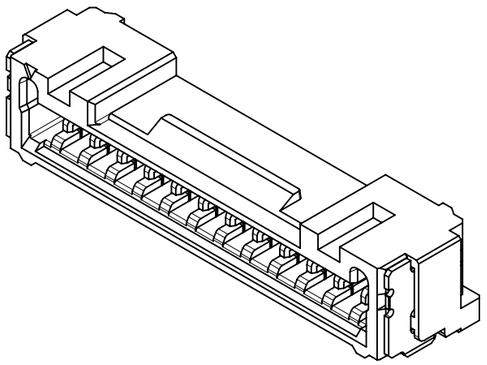

12-13極
12-13 CIRCUIT

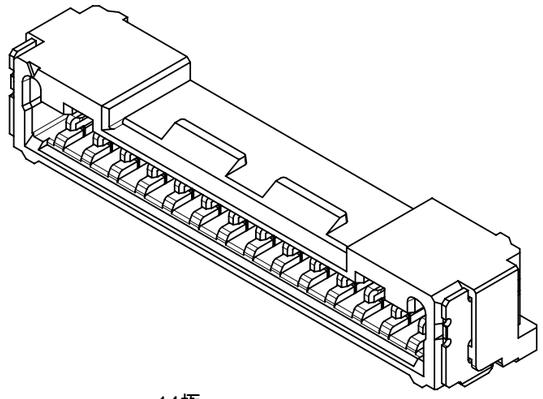

14極
14 CIRCUIT

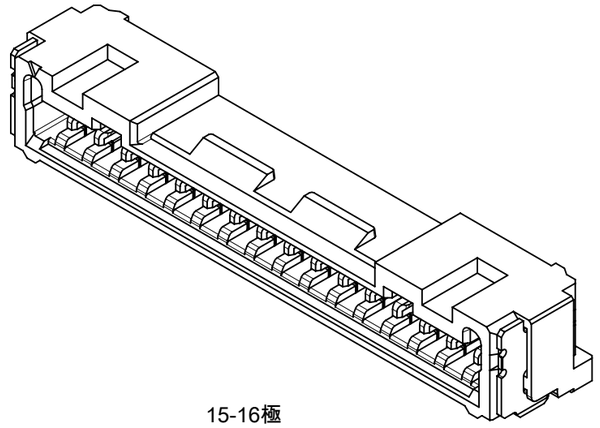

15-16極
15-16 CIRCUIT

基板パターンレイアウト
PCB PATTERN LAYOUT

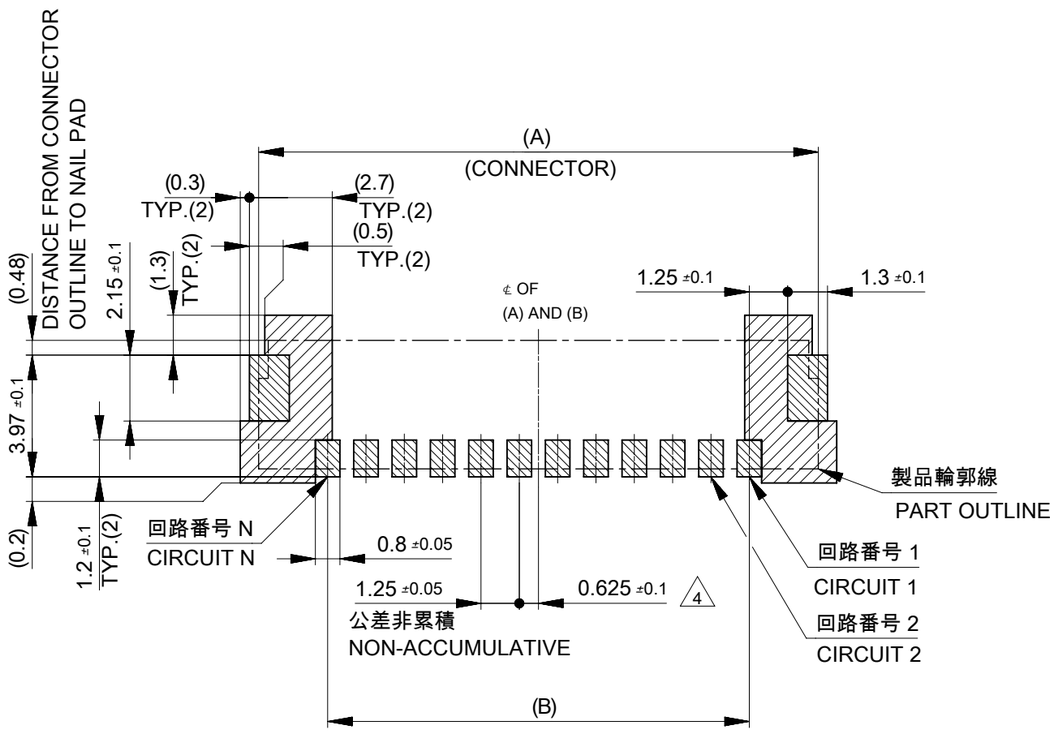

基板パターンレイアウト (参考)
(参考：基板厚 1.6mm, メタルマスク厚さ 0.15mm, マスク開口率 100%)
RECOMMEND PCB LAYOUT : COMPONENT SIDE
(REFERENCE : PCB THICKNESS 1.6mm, STENCIL THICKNESS 0.15mm, APERTURE RATIO 100%)

パターン非推奨エリア
パターンを引き回す際は、製品機能に影響がないことをご確認ください。
PATTERN IS NOT RECOMMENDED ON THE HATCHING AREA
PLEASE CHECK NOT TO HAVE PROBLEM FOR PRODUCT FUNCTION
WHEN SETTING PATTERN ON THE HATCHING AREA.

THIS DRAWING CONTAINS INFORMATION THAT IS PROPRIETARY TO MOLEX ELECTRONIC TECHNOLOGIES, LLC AND SHOULD NOT BE USED WITHOUT WRITTEN PERMISSION

DIMENSION UNITS	SCALE
mm	NTS

GENERAL TOLERANCES (UNLESS SPECIFIED)

ANGULAR TOL	±	3.0 °
4 PLACES	±	0.2
3 PLACES	±	0.2
2 PLACES	±	0.2
1 PLACE	±	0.2
0 PLACES	±	0.2

DRAFT WHERE APPLICABLE MUST REMAIN WITHIN DIMENSIONS

CURRENT REV DESC: REMOVED OBSOLETED PART NUMBERS AS PER PCN#515932.

EC NO: 812554
DRWN: RAVINR1 2025/01/28
CHK'D: GGA 2025/02/25
APPR: GGA 2025/02/25

INITIAL REVISION:
DRWN: RWATANABE01 2017/11/24
APPR: TKANEKO 2017/12/06

THIRD ANGLE PROJECTION | DRAWING: A3-SIZE | SERIES: 505567

molex

MICRO-LOCK PLUS 1.25 W/B
SINGLE ROW RIGHT ANGLE SMT PLUG ASSEMBLY
TIN-BISMUTH PLATING

PRODUCT CUSTOMER DRAWING

DOCUMENT NUMBER	DOC TYPE	DOC PART	REVISION
5055670000-SD	PSD	000	D1

MATERIAL NUMBER	CUSTOMER	SHEET NUMBER
SEE TABLE	GENERAL	2 OF 5

DOCUMENT STATUS	P1	RELEASE DATE	2025/02/25 06:03:53

FORMAT: master-tb-prod-A3
REVISION: J1
DATE: 2021/05/01

吸着エリア
SUCTION AREA

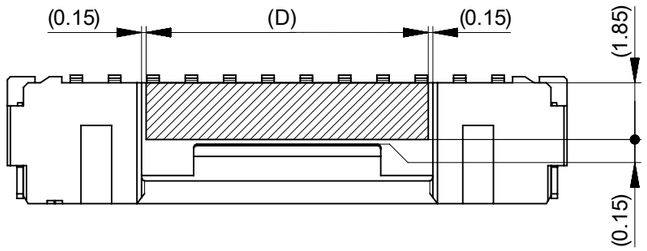

嵌合状態図
MATED CONNECTORS

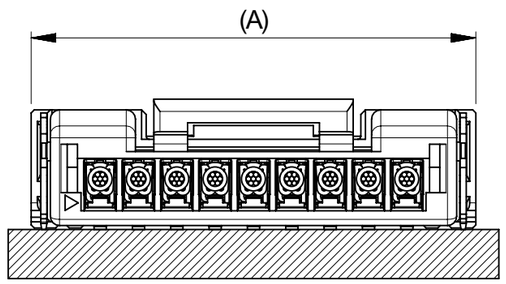

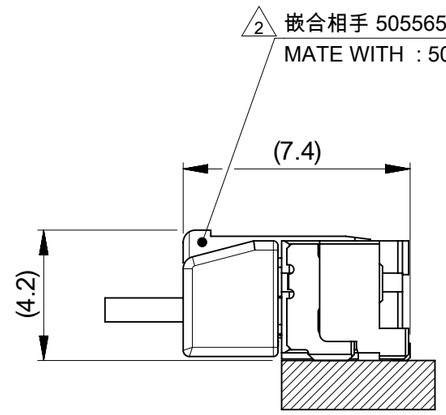

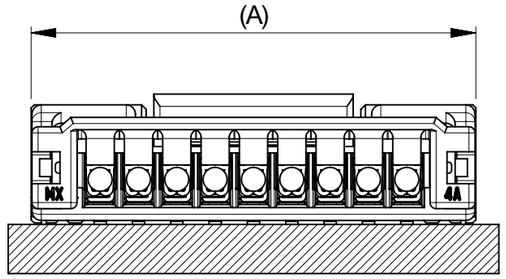

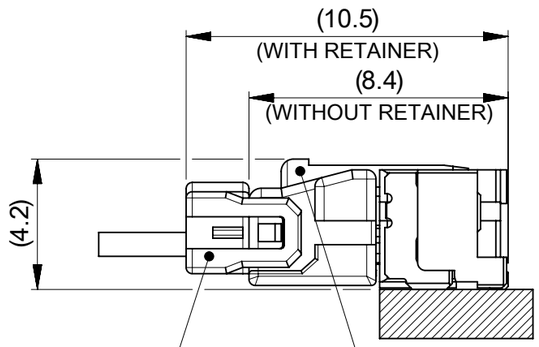

2 リテーナー : 214528 SERIES
RETAINER : 214528 SERIES

2 嵌合相手 214526シリーズ
MATE WITH : 214526 SERIES

10.7	16
	15
	14
9.2	13
	12
	11
	10
6.7	9
	8
	7
6.6	6
5.35	5
4.1	4
2.85	3
1.9	2
D	極数 CIRCUIT SIZE

THIS DRAWING CONTAINS INFORMATION THAT IS PROPRIETARY TO MOLEX ELECTRONIC TECHNOLOGIES, LLC AND SHOULD NOT BE USED WITHOUT WRITTEN PERMISSION

DIMENSION UNITS	mm
SCALE	NTS
GENERAL TOLERANCES (UNLESS SPECIFIED)	
ANGULAR TOL	± 3.0 °
4 PLACES	± 0.2
3 PLACES	± 0.2
2 PLACES	± 0.2
1 PLACE	± 0.2
0 PLACES	± 0.2
DRAFT WHERE APPLICABLE MUST REMAIN WITHIN DIMENSIONS	

CURRENT REV DESC: REMOVED OBSOLETED PART NUMBERS AS PER PCN#515932.

EC NO:	812554	
DRWN:	RAVINR1	2025/01/28
CHK'D:	GGA	2025/02/25
APPR:	GGA	2025/02/25
INITIAL REVISION:		
DRWN:	RWATANABE01	2017/11/24
APPR:	TKANEKO	2017/12/06

molex

MICRO-LOCK PLUS 1.25 W/B
SINGLE ROW RIGHT ANGLE SMT PLUG ASSEMBLY
TIN-BISMUTH PLATING

PRODUCT CUSTOMER DRAWING

DOCUMENT NUMBER	DOC TYPE	DOC PART	REVISION
5055670000-SD	PSD	000	D1

THIRD ANGLE PROJECTION	DRAWING	SERIES	MATERIAL NUMBER	CUSTOMER	SHEET NUMBER
	A3-SIZE	505567	SEE TABLE	GENERAL	3 OF 5

DOCUMENT STATUS	P1	RELEASE DATE	2025/02/25 06:03:53

FORMAT: master-tb-prod-A3
REVISION: J1
DATE: 2021/05/01

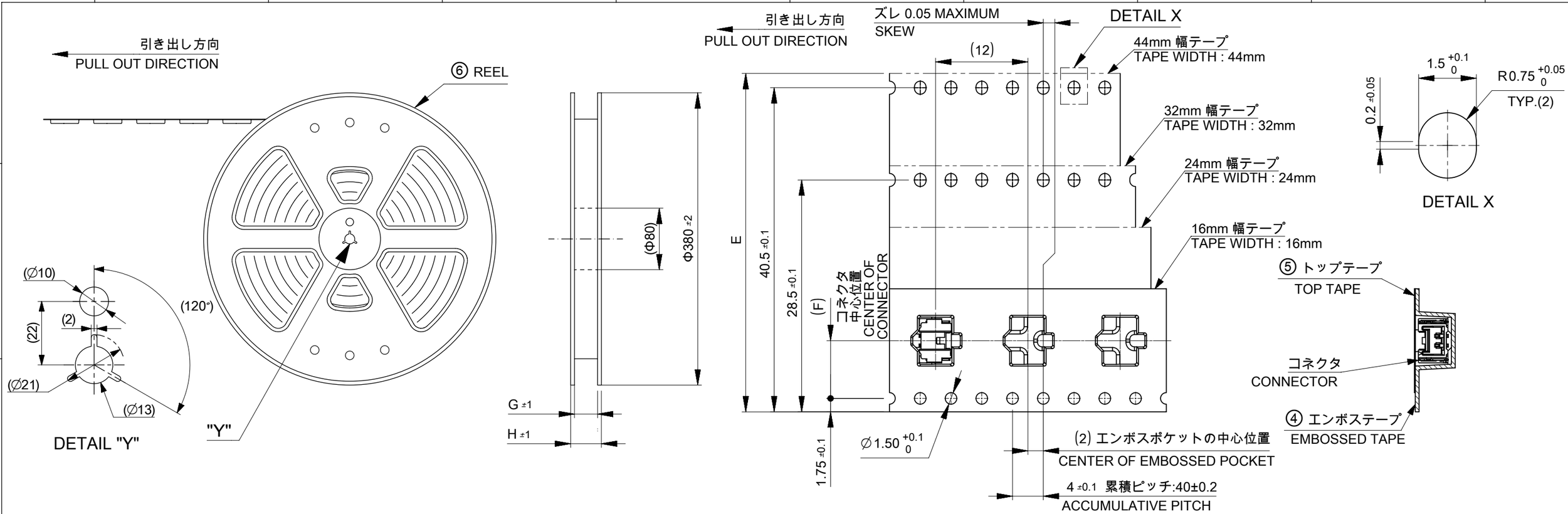

注記 NOTE

6. 梱包数量：1200個 / リール
   NUMBER OF CONNECTORS : 1200 PCS/REEL.
7. リードテープ長さ LEAD TAPE LENGTH.

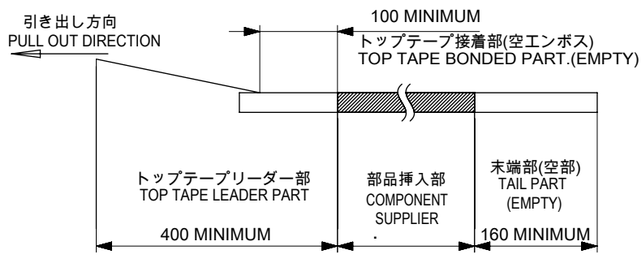

8. トップテープの剥離強度はIEC60286-3に準拠
   TOP TAPE PEELING FORCE IS DEFINED BY IEC60286-3.

H	G	F	E	極数 CIRCUIT SIZE
49.4	45.4	20.2	44±0.3	16
				15
				14
37.4	33.4	14.2	32±0.3	13
				12
				11
				10
29.4	25.4	11.5	$24^{+0.3}_{-0.1}$	9
				8
				7
				6
				5
				4
21.4	17.4	7.5	$16^{+0.3}_{-0.1}$	3
				2

⚠1 TABLE 2

番号 NO.	部品 PART	材質 MATERIAL
④	エンボステープ EMBOSSED TAPE	ポリスチレン(PS) POLYSTYRENE(PS)
⑤	トップテープ TOP TAPE	ポリエチレン(PE), その他 POLYETHYLENE(PE), ETC
⑥	リール REEL	ポリスチレン(PS) < リサイクル材を含む > POLYSTYRENE(PS) < RECYCLE MATERIAL CONTAINED >

DOCUMENT STATUS | P1 | RELEASE DATE | 2025/02/25 06:03:53

THIS DRAWING CONTAINS INFORMATION THAT IS PROPRIETARY TO MOLEX ELECTRONIC TECHNOLOGIES, LLC AND SHOULD NOT BE USED WITHOUT WRITTEN PERMISSION

DIMENSION UNITS: mm | SCALE: NTS

GENERAL TOLERANCES (UNLESS SPECIFIED)

ANGULAR TOL	±	3.0 °
4 PLACES	±	0.2
3 PLACES	±	0.2
2 PLACES	±	0.2
1 PLACE	±	0.2
0 PLACES	±	0.2

DRAFT WHERE APPLICABLE MUST REMAIN WITHIN DIMENSIONS

CURRENT REV DESC: REMOVED OBSOLETED PART NUMBERS AS PER PCN#515932.

EC NO: 812554
DRWN: RAVINR1 2025/01/28
CHK'D: GGA 2025/02/25
APPR: GGA 2025/02/25

INITIAL REVISION:
DRWN: RWATANABE01 2017/11/24
APPR: TKANEKO 2017/12/06

THIRD ANGLE PROJECTION | DRAWING: A3-SIZE | SERIES: 505567

molex

MICRO-LOCK PLUS 1.25 W/B
SINGLE ROW RIGHT ANGLE SMT PLUG ASSEMBLY
TIN-BISMUTH PLATING

PRODUCT CUSTOMER DRAWING

DOCUMENT NUMBER	DOC TYPE	DOC PART	REVISION
5055670000-SD	PSD	000	D1

MATERIAL NUMBER	CUSTOMER	SHEET NUMBER
SEE TABLE	GENERAL	4 OF 5

FORMAT: master-llb-prod-A3
REVISION: J1
DATE: 2021/05/01

△2 適合製品及び各種仕様書 APPLICABLE PRODUCTS AND VARIOUS SPECIFICATIONS

梱包仕様書 PACKAGING SPECIFICATION	5055679200 PS 200

適合嵌合相手 MATE WITH	シリーズ番号 SERIES NUMBER	505565	214526
	リテーナー対応 RETAINER APPLICABLE	NOT COMPLIANT	COMPLIANT (NATURAL, BLACK, RED, YELLOW, BLUE)
適合リテーナーシリーズ番号 APPLICABLE RETAINER SERIES NUMBER		-	214528
製品仕様書 PRODUCT SPECIFICATION		5055650000 PS 000	2145260000-PS PS 000
コネクタ取扱説明書 APPLICATION SPECIFICATION		5055650000-AS PS 000	

△5 505567**7* 発注番号一覧 ORDER NUMBER LIST

ORANGE	GREEN	BLUE	YELLOW	RED	BLACK	NATURAL (BEIGE)	HOUSING COLOR
------	------	5055671674	------	5055671672	5055671671	5055671670	16
------	------	5055671574	------	5055671572	5055671571	5055671570	15
------	------	5055671474	------	5055671472	5055671471	5055671470	14
------	------	5055671374	------	5055671372	5055671371	5055671370	13
------	------	5055671274	------	5055671272	5055671271	5055671270	12
------	------	5055671174	------	5055671172	5055671171	5055671170	11
------	------	5055671074	------	5055671072	5055671071	5055671070	10
5055670978	------	5055670974	------	5055670972	5055670971	5055670970	9
------	------	5055670874	------	5055670872	5055670871	5055670870	8
------	------	5055670774	------	5055670772	5055670771	5055670770	7
------	------	5055670674	------	5055670672	5055670671	5055670670	6
------	------	5055670574	------	5055670572	5055670571	5055670570	5
------	------	5055670474	------	5055670472	5055670471	5055670470	4
------	------	5055670374	------	5055670372	5055670371	5055670370	3
------	5055670276	5055670274	5055670273	5055670272	5055670271	5055670270	2
発注番号：ORDER NUMBER							極数 CIRCUIT SIZE
エンボステープ梱包 PACKAGING STYLE: EMBOSSED TAPE AND REEL							

THIS DRAWING CONTAINS INFORMATION THAT IS PROPRIETARY TO MOLEX ELECTRONIC TECHNOLOGIES, LLC AND SHOULD NOT BE USED WITHOUT WRITTEN PERMISSION

DIMENSION UNITS	mm
SCALE	NTS
GENERAL TOLERANCES (UNLESS SPECIFIED)	
ANGULAR TOL	± 3.0 °
4 PLACES	± 0.2
3 PLACES	± 0.2
2 PLACES	± 0.2
1 PLACE	± 0.2
0 PLACES	± 0.2
DRAFT WHERE APPLICABLE MUST REMAIN WITHIN DIMENSIONS	

CURRENT REV DESC: REMOVED OBSOLETED PART NUMBERS AS PER PCN#515932.

EC NO: 812554
DRWN: RAVINR1 2025/01/28
CHK'D: GGA 2025/02/25
APPR: GGA 2025/02/25

INITIAL REVISION:
DRWN: RWATANABE01 2017/11/24
APPR: TKANEKO 2017/12/06

molex

MICRO-LOCK PLUS 1.25 W/B
SINGLE ROW RIGHT ANGLE SMT PLUG ASSEMBLY
TIN-BISMUTH PLATING

PRODUCT CUSTOMER DRAWING

DOCUMENT NUMBER	DOC TYPE	DOC PART	REVISION
5055670000-SD	PSD	000	D1

THIRD ANGLE PROJECTION	DRAWING	SERIES	MATERIAL NUMBER	CUSTOMER	SHEET NUMBER
	A3-SIZE	505567	SEE TABLE	GENERAL	5 OF 5

DOCUMENT STATUS	P1	RELEASE DATE	2025/02/25 06:03:53

FORMAT: master-lb-prod-A3
REVISION: J1
DATE: 2021/05/01