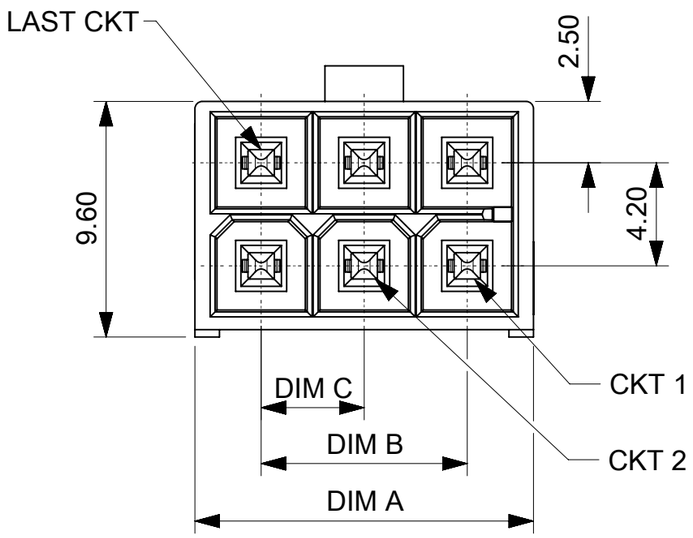

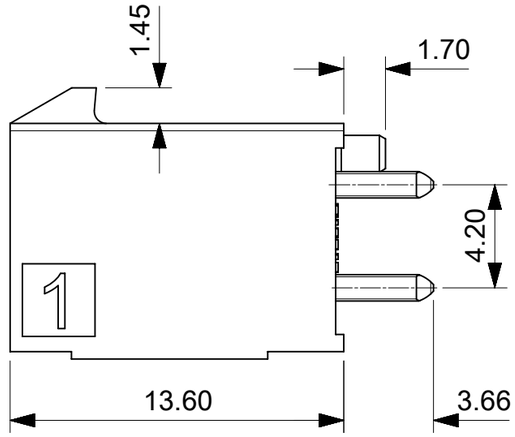

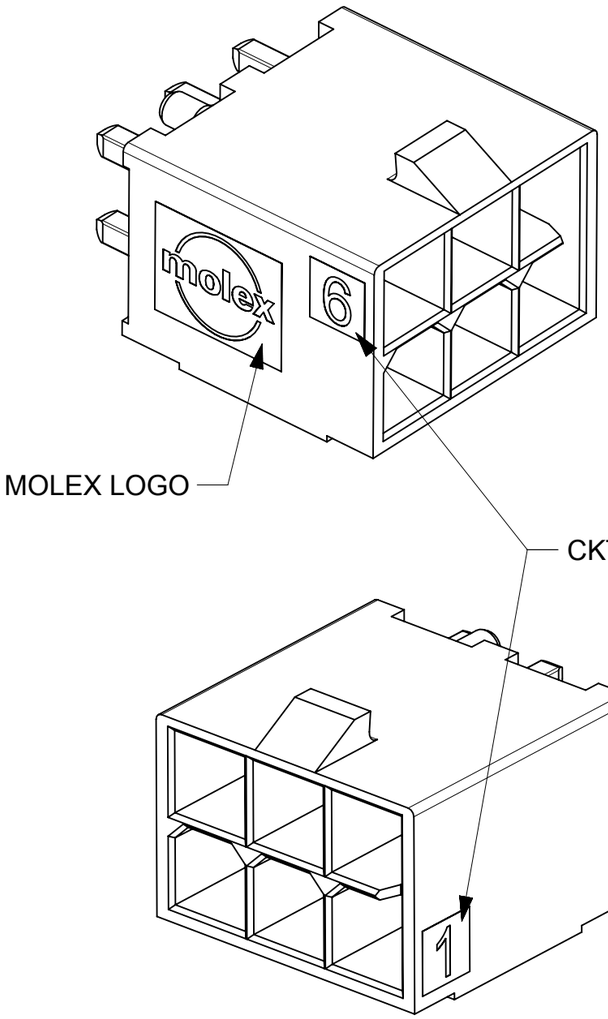

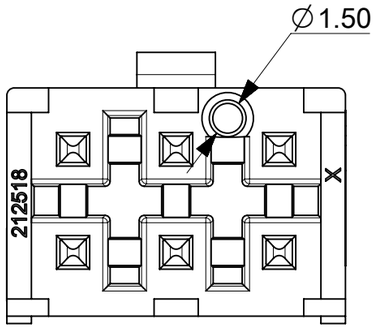

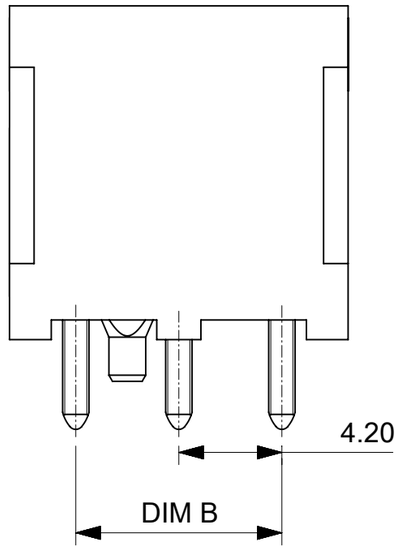

NOTES:
1. MATERIALS:
   HOUSING - LCP UL94V-0, COLOR: BLACK
   TERMINAL - COPPER ALLOY
2. TERMINAL PLATING: TIN OVER NICKEL OVERALL.
3. PRODUCT SPECIFICATION: 2125150000-PS.
4 PACKAGING SPECIFICATION:
   TRAY PACK PER: 212520001-PK
   TAPE AND REEL PER :2125200002-PK
5. PART MATES WITH MINI-FIT MAX RECEPTACLE SERIES 212514.
6. DISCOLORIZATION IN THE BANDOLIER CARRIER AREA OF THE PIN IS INHERENT TO THE PLATING PROCESS AND IS DUE TO THE MASKING EFFECT OF THE CARRIER. THIS DISCOLORIZTION IS A NON-FUNCTIONAL AREA OF THE PIN AND WILL NOT AFFECT THE PERFORMANCE OF THE HEADER ASSEMBLY.
7. CONNECTORS ARE NOT TO BE MATED OR UNMATED WHILE CIRCUITS ARE LIVE.
8. PARTS ARE NOT DESIGNED FOR CURRENT SHARING.
9. THIS PART CONFORMS TO CLASS "B" REQUIREMENTS OF COSMETIC SPECIFICATION PS-45499-002.
10. TEXT ON PART IS FOR REFERENCE ONLY. TEXT AND TEXT LOCATION MAY VARY DEPENDING ON PART NUMBER AND/OR TOOL.

THIS DRAWING CONTAINS INFORMATION THAT IS PROPRIETARY TO MOLEX ELECTRONIC TECHNOLOGIES, LLC AND SHOULD NOT BE USED WITHOUT WRITTEN PERMISSION

DIMENSION UNITS	SCALE
mm	NTS

GENERAL TOLERANCES (UNLESS SPECIFIED)

ANGULAR TOL	±	°
4 PLACES	±	
3 PLACES	±	
2 PLACES	±	0.25
1 PLACE	±	0.5
0 PLACES	±	

DRAFT WHERE APPLICABLE MUST REMAIN WITHIN DIMENSIONS

CURRENT REV DESC:

EC NO: 799645
DRWN: ZIXUAQ 2023/04/25
CHK'D: XQZHANG 2024/11/13
APPR: XQZHANG 2024/11/13

INITIAL REVISION:
DRWN: SCHEN76 2020/04/24
APPR: YXZHENG 2020/05/13

THIRD ANGLE PROJECTION | DRAWING: A3-SIZE | SERIES: 212520

molex

MINI-FIT MAX DR HDR VERTICAL
VERT. HEADER ASSY 2-12 CKT

PRODUCT CUSTOMER DRAWING

DOCUMENT NUMBER	DOC TYPE	DOC PART	REVISION
2125200001-SD	PSD	000	B3

MATERIAL NUMBER	CUSTOMER	SHEET NUMBER
SEE TABLE	GENERAL MARKET	1 OF 2

DOCUMENT STATUS	P1	RELEASE DATE	2024/11/13 05:39:07

FORMAT: master-tb-prod-A3
REVISION: J1
DATE: 2021/05/01

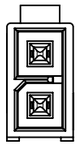

2 CKT

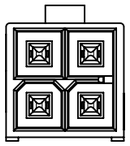

4 CKT

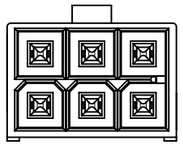

6 CKT

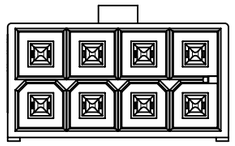

8 CKT

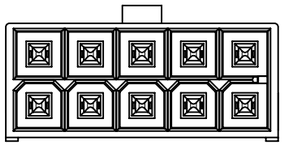

10 CKT

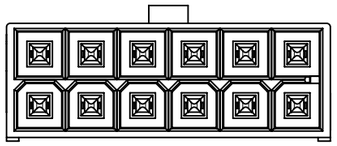

12 CKT

TIN PLATING					
CKT SIZE	PART NO.	DIM A	DIM B	DIM C	PACKAGE
2	212520-1002	5.40	NA	NA	TRAY 2125200001-PK
4	212520-1004	9.60	4.2	2.10	
6	212520-1006	13.80	8.40	4.20	
8	212520-1008	18.00	12.60	6.30	
10	212520-1010	22.20	16.80	8.40	
12	212520-1012	26.40	21.00	10.50	

TIN PLATING					
CKT SIZE	PART NO.	DIM A	DIM B	DIM C	PACKAGE
2	212520-1102*	5.40	NA	NA	TAPE & REEL 2125200002-PK
4	212520-1104	9.60	4.2	2.10	
6	212520-1106*	13.80	8.40	4.20	
8	212520-1108*	18.00	12.60	6.30	
10	212520-1110*	22.20	16.80	8.40	
12	212520-1112*	26.40	21.00	10.50	
* : NOT RELEASED					

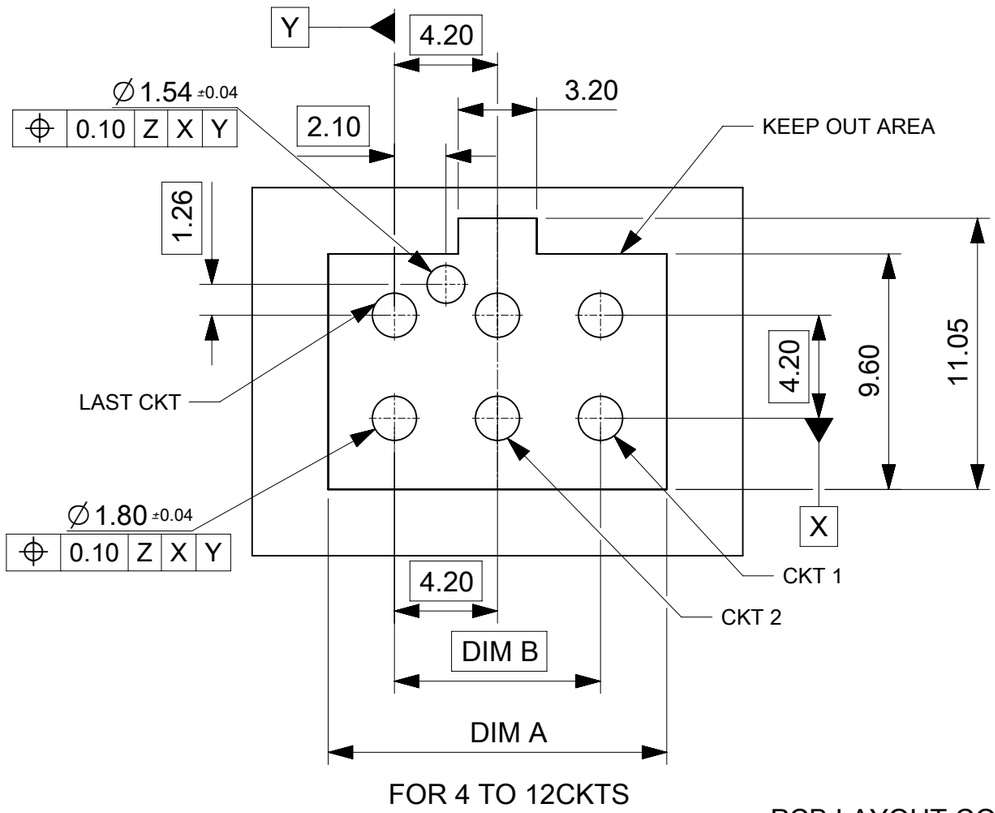

FOR 4 TO 12CKTS

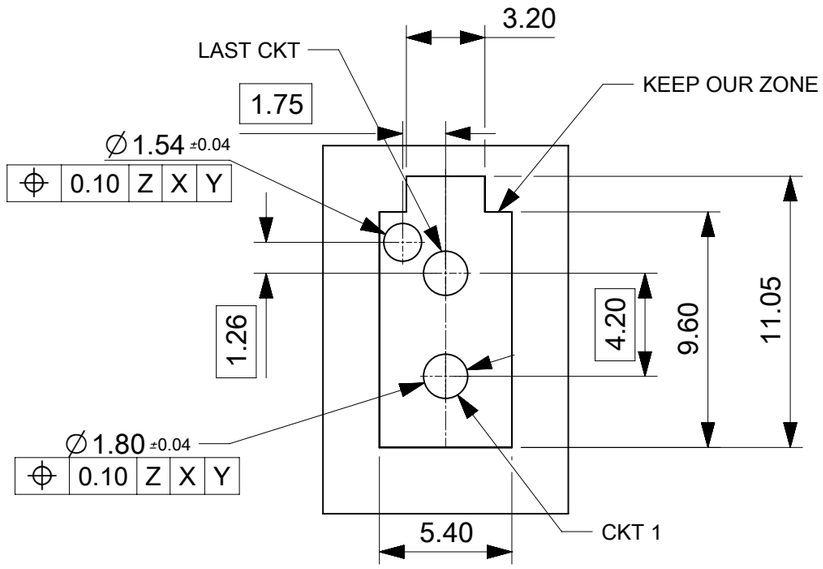

FOR 2CKTS

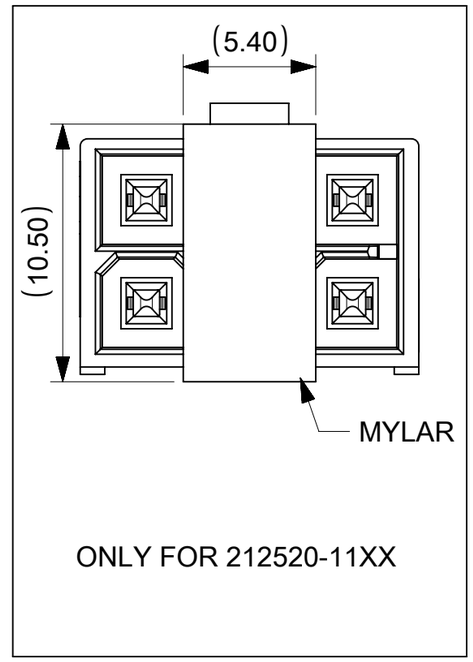

ONLY FOR 212520-11XX

PCB LAYOUT COMPONENT SIDE
RECOMENDED PCB THICKNESS 1.60MM-2.40MM

NOTE: DATUM -Z- IS ON PCB COMPONENT SIDE

THIS DRAWING CONTAINS INFORMATION THAT IS PROPRIETARY TO MOLEX ELECTRONIC TECHNOLOGIES, LLC AND SHOULD NOT BE USED WITHOUT WRITTEN PERMISSION

DIMENSION UNITS	mm
SCALE	NTS
GENERAL TOLERANCES (UNLESS SPECIFIED)	
ANGULAR TOL	± °
4 PLACES	±
3 PLACES	±
2 PLACES	± 0.25
1 PLACE	± 0.5
0 PLACES	±
DRAFT WHERE APPLICABLE MUST REMAIN WITHIN DIMENSIONS	

CURRENT REV DESC:

EC NO: 799645
DRWN: ZIXUAQ 2023/04/25
CHK'D: XQZHANG 2024/11/13
APPR: XQZHANG 2024/11/13

INITIAL REVISION:
DRWN: SCHEN76 2020/04/24
APPR: YXZHENG 2020/05/13

molex

MINI-FIT MAX DR HDR VERTICAL
VERT. HEADER ASSY 2-12 CKT

PRODUCT CUSTOMER DRAWING

THIRD ANGLE PROJECTION	DRAWING	SERIES	MATERIAL NUMBER	CUSTOMER	SHEET NUMBER
	A3-SIZE	212520	SEE TABLE	GENERAL MARKET	2 OF 2

DOCUMENT NUMBER	DOC TYPE	DOC PART	REVISION
2125200001-SD	PSD	000	B3

DOCUMENT STATUS	P1	RELEASE DATE	2024/11/13 05:39:07

FORMAT: master-tb-prod-A3
REVISION: J1
DATE: 2021/05/01