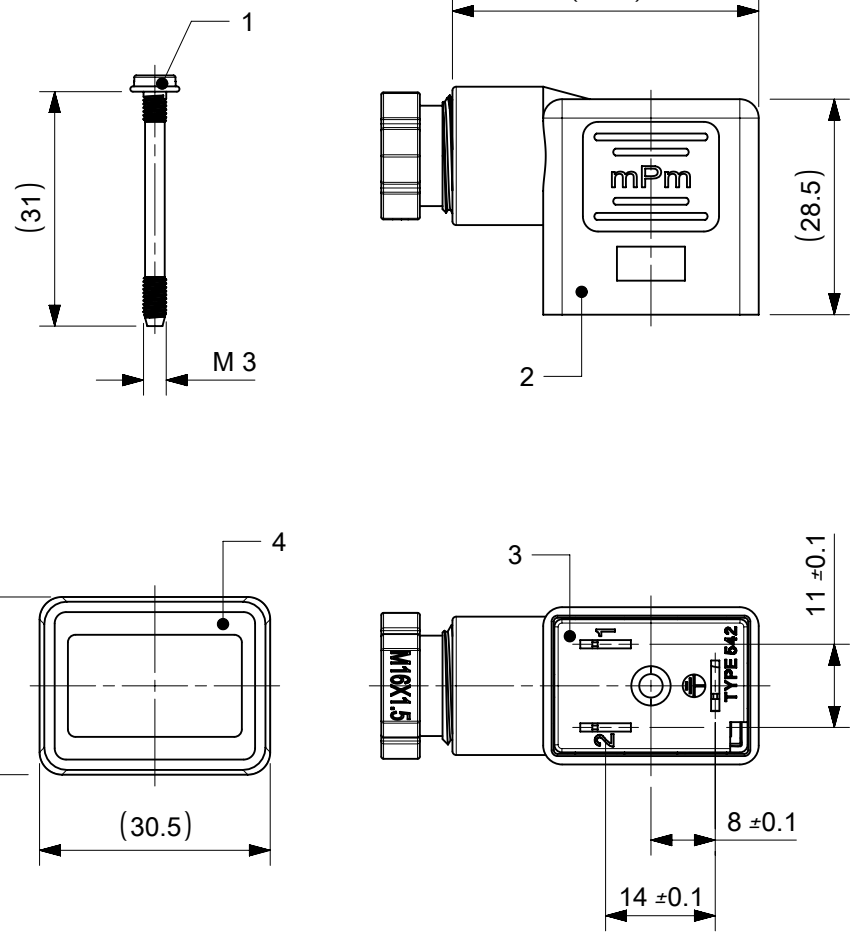

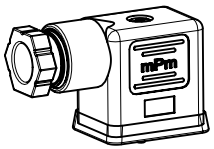

ITEM	DESCRIPTION
1	SCREW
2	COVER
3	INSERT
4	GASKET

S54 2 09 N R0 5 1 **

SERIES
S54= INTERNAL THREAD FORM B INDUSTRIAL
POLES
THREAD
09= PG9, M2= M12x1.5, M6= M19x1.5
MATERIAL AND HOUSING COLOUR
G= PA6 GRAY, N= PA6 BLACK, T= TRANSPARENT
CIRCUIT
SEE DETAILS IN CATALOGUE
VOLTAGE
SEE DETAILS IN CATALOGUE
SCREW AND GASKET
1= NBR PROFILE GASKET & SCREW
2= NBR FLAT GASKET & SCREW
3= WHITE SILICON PROFILE GASKET & SCREW
4= WHITE SILICON FLAT GASKET & SCREW
NON STANDARD COMPONENTS
14= PACKED IN NEUTRAL BAG
P7= IP67 COMPLIANT
89= DIODE IN SERIES WITH PIN 1
2Q= SPRING CLAMP TERMINALS
AF= MOUNTED FIXING SCREW

THIS DRAWING CONTAINS INFORMATION THAT IS PROPRIETARY TO MOLEX ELECTRONIC TECHNOLOGIES, LLC AND SHOULD NOT BE USED WITHOUT WRITTEN PERMISSION

FUNCTIONAL SYMBOLS
FA= 0
FC= 0
FD= 0
DIVISIONAL SYMBOLS

DIMENSION UNITS	SCALE
mm	1:1

GENERAL TOLERANCES (UNLESS SPECIFIED)

ANGULAR TOL	±	°
4 PLACES	±	
3 PLACES	±	
2 PLACES	±	0.1
1 PLACE	±	0.2
0 PLACES	±	

DRAFT WHERE APPLICABLE MUST REMAIN WITHIN DIMENSIONS

CURRENT REV DESC:

EC NO: 789691
DRWN: MARCIM6 2024/06/12
CHK'D: RSILLER 2024/06/18
APPR: RSILLER 2024/06/18

INITIAL REVISION:
DRWN: DSHEA 2011/06/03
APPR: EFOLAN 2011/06/22

molex

S54 SERIES
INTERNAL THREAD TYPE B INDUSTRIAL

PRODUCT CUSTOMER DRAWING

DOCUMENT NUMBER	DOC TYPE	DOC PART	REVISION
SD-121064-008	PSD	001	F1

THIRD ANGLE PROJECTION	DRAWING	SERIES	MATERIAL NUMBER	CUSTOMER	SHEET NUMBER
	A4-SIZE	121064	SEE TABLE 1	GENERAL MARKET	1 OF 2

DOCUMENT STATUS	P1	RELEASE DATE	2024/06/18 14:08:59

FORMAT: master-tb-prod-A4
REVISION: J1
DATE: 2021/05/01

TABLE 1

MOLEX PN	ENGINEERING PN	CIRCUIT	VOLTAGE
1210641033	S54209GR051	R0	230V
1210641036	S54209NR021	R0	24V
1210641037	S54209NR041	R0	115V
1210641038	S54209NR051	R0	230V
1210641045	S54209TA051	A0	230V
1210641047	S54209TA121	A1	24V
1210641049	S54209TA141	A1	115V
1210641057	S54209TC321	C3	24V
1210641058	S54209TC322	C3	24V
1210641064	S54209TC421	C4	24V
1210641065	S54209TC422	C4	24V
1210641067	S54209TC441	C4	115V
1210641069	S54209TC451	C4	230V
1210641070	S54209TC452	C4	230V
1210641071	S54209TC4B1	C4	24V
1210641072	S54209TC4C1	C4	48V
1210641073	S54209TC4D1	C4	115V
1210641074	S54209TC4E1	C4	230V
1210641076	S54209TC4H2	C4	24V
1210641079	S54209TC4M2	C4	230V
1210641084	S54209TS021	S0	24V
1210641417	S54209TC4B1P7	C4	24V
1210641430	S54209TR051	R0	230V
1210641456	S542M6TC321	C3	24V
1210650413	S54209TC4B12Q	C4	24V
1210650485	S54209TC42114	C4	24V
1210650596	S542M6TC421	C4	24V
1210641821	S542M6TC323	C3	24V

THIS DRAWING CONTAINS INFORMATION THAT IS PROPRIETARY TO MOLEX ELECTRONIC TECHNOLOGIES, LLC AND SHOULD NOT BE USED WITHOUT WRITTEN PERMISSION

FUNCTIONAL SYMBOLS
FA = 0
FC = 0
FD = 0
DIVISIONAL SYMBOLS

DIMENSION UNITS	SCALE
mm	1:1

GENERAL TOLERANCES (UNLESS SPECIFIED)

ANGULAR TOL	±	°
4 PLACES	±	
3 PLACES	±	
2 PLACES	±	0.1
1 PLACE	±	0.2
0 PLACES	±	

DRAFT WHERE APPLICABLE MUST REMAIN WITHIN DIMENSIONS

CURRENT REV DESC:

EC NO: 789691
DRWN: MARCIM6 2024/06/12
CHK'D: RSILLER 2024/06/18
APPR: RSILLER 2024/06/18

INITIAL REVISION:
DRWN: DSHEA 2011/06/03
APPR: EFOLAN 2011/06/22

molex

S54 SERIES
INTERNAL THREAD TYPE B INDUSTRIAL

PRODUCT CUSTOMER DRAWING

DOCUMENT NUMBER	DOC TYPE	DOC PART	REVISION
SD-121064-008	PSD	001	F1

THIRD ANGLE PROJECTION	DRAWING	SERIES	MATERIAL NUMBER	CUSTOMER	SHEET NUMBER
	A4-SIZE	121064	SEE TABLE 1	GENERAL MARKET	2 OF 2

DOCUMENT STATUS	P1	RELEASE DATE	2024/06/18 14:08:59

FORMAT: master-tb-prod-A4
REVISION: J1
DATE: 2021/05/01