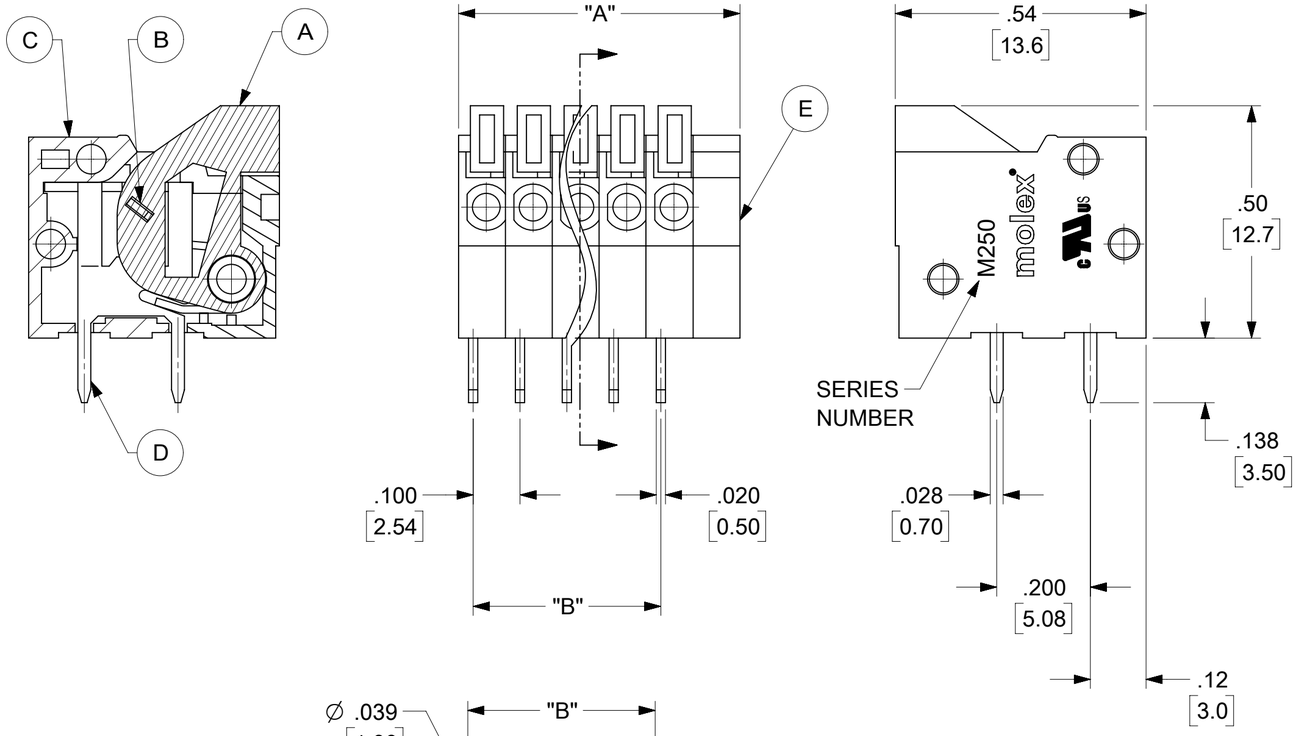

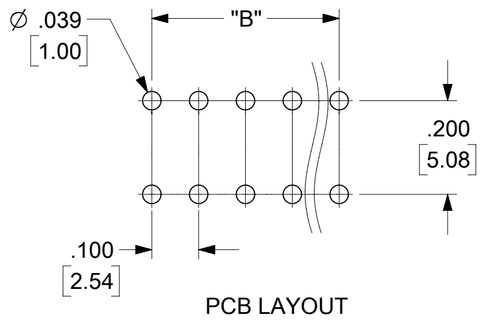

PCB LAYOUT

PART NUMBER DATA							
CIRCUITS	PART NUMBER	ENGINEERING NUMBER	COLOR	DIM. "A"		DIM. "B"	
				IN	mm	IN	mm
2	397000002	M250-00-1-02-3	GREEN	.30	7.6	.100	2.54
3	397000003	M250-00-1-03-3	GREEN	.40	10.2	.200	5.08
4	397000004	M250-00-1-04-3	GREEN	.50	12.7	.300	7.62
5	397000005	M250-00-1-05-3	GREEN	.60	15.2	.400	10.16
6	397000006	M250-00-1-06-3	GREEN	.70	17.8	.500	12.70
7	397000007	M250-00-1-07-3	GREEN	.80	20.3	.600	15.24
8	397000008	M250-00-1-08-3	GREEN	.90	22.9	.700	17.78
9	397000009	M250-00-1-09-3	GREEN	1.00	25.4	.800	20.32
10	397000010	M250-00-1-10-3	GREEN	1.10	27.9	.900	22.86
11	397000011	M250-00-1-11-3	GREEN	1.20	30.5	1.000	25.40
12	397000012	M250-00-1-12-3	GREEN	1.30	33.0	1.100	27.94
13	397000013	M250-00-1-13-3	GREEN	1.40	35.6	1.200	30.48
14	397000014	M250-00-1-14-3	GREEN	1.50	38.1	1.300	33.02
15	397000015	M250-00-1-15-3	GREEN	1.60	40.6	1.400	35.56
16	397000016	M250-00-1-16-3	GREEN	1.70	43.2	1.500	38.10
17	397000017	M250-00-1-17-3	GREEN	1.80	45.7	1.600	40.64
18	397000018	M250-00-1-18-3	GREEN	1.90	48.3	1.700	43.18
19	397000019	M250-00-1-19-3	GREEN	2.00	50.8	1.800	45.72
20	397000020	M250-00-1-20-3	GREEN	2.10	53.3	1.900	48.26
21	397000021	M250-00-1-21-3	GREEN	2.20	55.9	2.000	50.80
22	397000022	M250-00-1-22-3	GREEN	2.30	58.4	2.100	53.34
23	397000023	M250-00-1-23-3	GREEN	2.40	61.0	2.200	55.88
24	397000024	M250-00-1-24-3	GREEN	2.50	63.5	2.300	58.42

CONTACT FACTORY FOR OPTIONAL COLORS

SPECIFICATIONS:

1. MATERIAL:
   - A. BUTTON: PA66 UL94 V-0
   - B. SPRING: ST. STEEL
   - C. BODY : PA66 UL94 V-0
   - D. TERMINAL: BRASS TIN PLATED
   - E. COVER: PA66 UL94 V-0
2. WIRE SIZE: 18 TO 26 AWG (SOL/STR) C1
3. ELECTRICAL RATING (UL): 150V, 6A C1
4. WIRE STRIP LENGTH: .18 (4.5mm)
5. POWER FREQUENCYE WITHSTAND: AC 2000V FOR 1 MINUTE
6. INSULATION RESISTANCE: DC 500V, 500MΩ
7. RATED IMPULSE VOLTAGE: 2500V PLUS AND MINUS 5 TIMES EACH
8. OPERATING TEMPERATURE : -40°C TO +115°C C1
9. MAX SOLDERING TEMPERATURE : +260°C FOR 5 SECONDS

TOLERANCES			
MM	TOL	INCH	TOL
0-6	±0.25	0-.24	±.010
>6-30	±0.40	>.24-1.18	±.016
>30-120	±0.50	>1.18-4.76	±.020
>120	±0.80	>4.76	±.031

ENGINEERING NUMBER LEGEND

M250 - 00 - 1 - XX - X

- M250 — SERIES
- 00 — STYLE
- 1 — PITCH: 1=2.54mm
- XX — POLES
- X — COLOR

FUNCTIONAL SYMBOLS: FA = 0; FC = 0; FP = 0

DIVISIONAL SYMBOLS

THIS DRAWING CONTAINS INFORMATION THAT IS PROPRIETARY TO MOLEX ELECTRONIC TECHNOLOGIES, LLC AND SHOULD NOT BE USED WITHOUT WRITTEN PERMISSION

DIMENSION UNITS: INCH/MM — SCALE: 4:1

GENERAL TOLERANCES (UNLESS SPECIFIED)

	MM	INCH
4 PLACES	± ---	± ---
3 PLACES	± ---	± SEE CHART
2 PLACES	± SEE CHART	± SEE CHART
1 PLACE	± SEE CHART	± ---
0 PLACES	± ---	± ---
ANGULAR TOL	± ---	

DRAFT WHERE APPLICABLE MUST REMAIN WITHIN DIMENSIONS

CURRENT REV DESC: MIGRATED TO NX. MODIFIED NOTES - #2, #3 & #8

EC NO: 708205
DRWN: ABENJAMINLW 2022/05/23
CHK'D: DACHAMMER 2022/05/25
APPR: JFMURPHY 2022/06/13

INITIAL REVISION:
DRWN: RSTONE 2013/10/02
APPR: JFMURPHY 2013/12/26

molex

SPRING TERMINAL BLOCK
.100 (2.54) PITCH HORIZONTAL MODULAR

PRODUCT CUSTOMER DRAWING

DOCUMENT NUMBER	DOC TYPE	DOC PART	REVISION
SD-39700-001	PSD	001	C1

THIRD ANGLE PROJECTION	DRAWING	SERIES	MATERIAL NUMBER	CUSTOMER	SHEET NUMBER
	C-SIZE	39700	SEE CHART	GENERAL MARKET	1 OF 1

DOCUMENT STATUS	P1	RELEASE DATE	2022/06/13 16:49:39

FORMAT: Eng-lega-master-lb-prod-C
REVISION: E1
DATE: 2021/05/01