MATERIALS AND FINISHES

BODY, CONTACT, CAP: BRASS
PLATED GOLD

INSULATOR: TEFLON

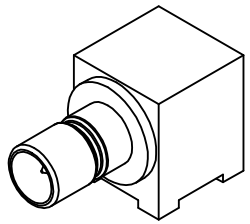

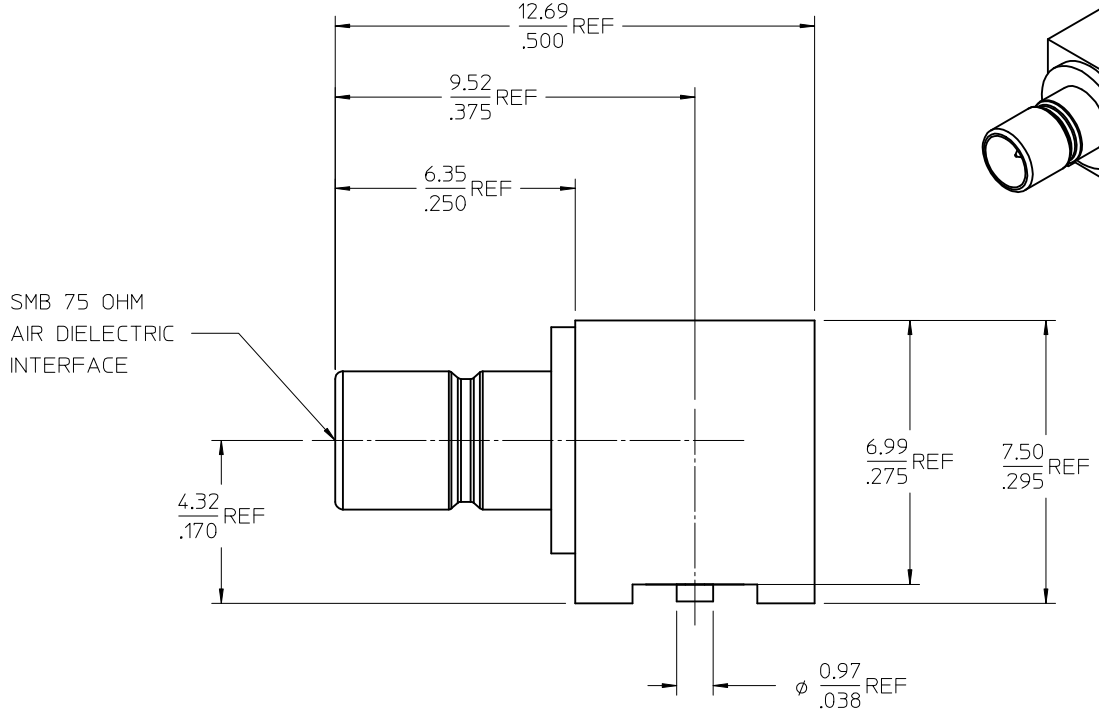

RECOMMENDED PCB LAYOUT

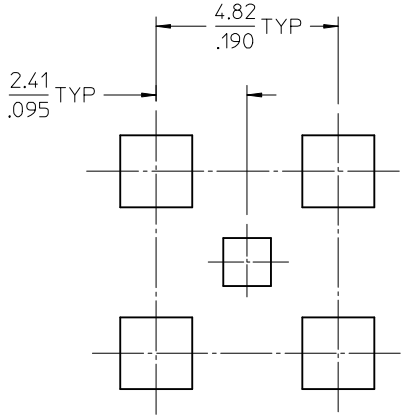

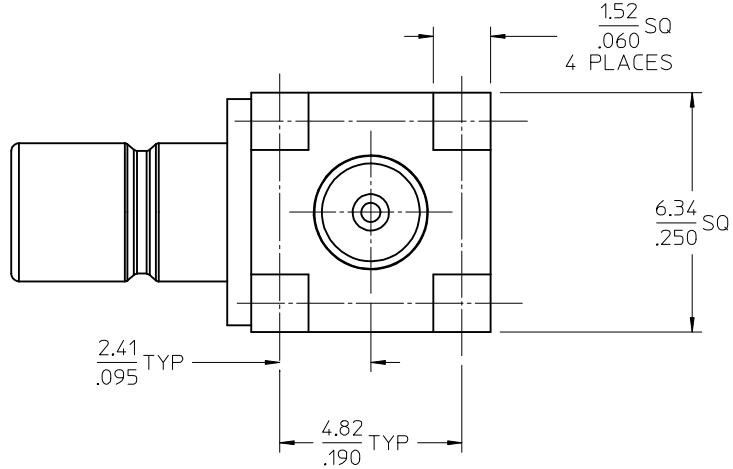

PART # 73404-0200

CHG: REDREW TO SHOW REVISED BODY.
EC NO: URF2006-0141 2005/10/04
DRWN:AROBERTSON 2005/10/04
CHKD:
APPR: JWIENER 2005/10/04
DESCRIPTION
REV

A2

QUALITY SYMBOLS
▼=0
▽C=0

GENERAL TOLERANCES (UNLESS SPECIFIED)

	mm	INCH
4 PLACES	± ---	± ---
3 PLACES	± ---	± ---
2 PLACES	± ---	± ---
1 PLACE	± ---	± ---

ANGULAR ± 2 °

DRAFT WHERE APPLICABLE MUST REMAIN WITHIN DIMENSIONS

DIMENSION STYLE: MM/IN
SCALE:
DESIGN UNITS: METRIC
THIRD ANGLE PROJECTION

DRAWN BY	SSS
DATE	2000/01/21
CHECKED BY	TEF
DATE	2000/01/21
APPROVED BY	GMH
DATE	2000/01/21

TITLE: SMB, JACK, 75 OHM R/A SMT, AIR DIELECTRIC SMB-J/PCB, EWR-2919

molex MOLEX INCORPORATED

MATERIAL NO. 734040200
DOCUMENT NO. SD-73404-020
SHEET NO. 1 OF 1

SIZE C

THIS DRAWING CONTAINS INFORMATION THAT IS PROPRIETARY TO MOLEX INCORPORATED AND SHOULD NOT BE USED WITHOUT WRITTEN PERMISSION