NO. OF CIRCUITS	DIM. "A"		DIM. "B"		ASSEMBLY MATERIAL NO.
	mm	in	mm	in	
02	31.8	1.25	15.00	.591	399200702
03	46.8	1.84	30.00	1.181	399200703
04	61.8	2.43	45.00	1.772	399200704
05	76.8	3.02	60.00	2.362	399200705
06	91.8	3.61	75.00	2.953	399200706
09	136.8	5.38	120.00	4.724	399200709
10	151.8	5.97	135.00	5.315	399200710
11	166.8	6.57	150.00	5.906	399200711
12	181.8	7.16	165.00	6.496	399200712

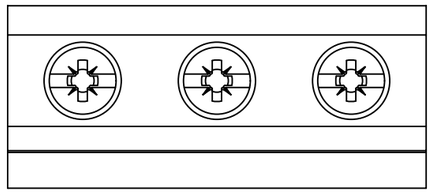

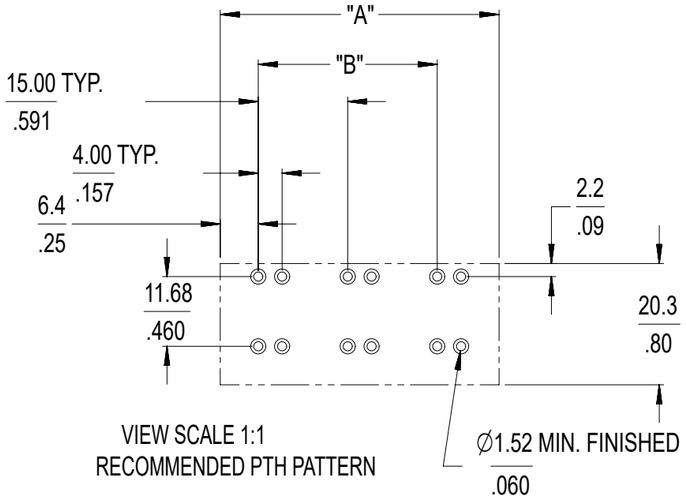

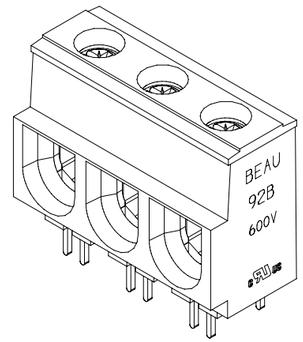

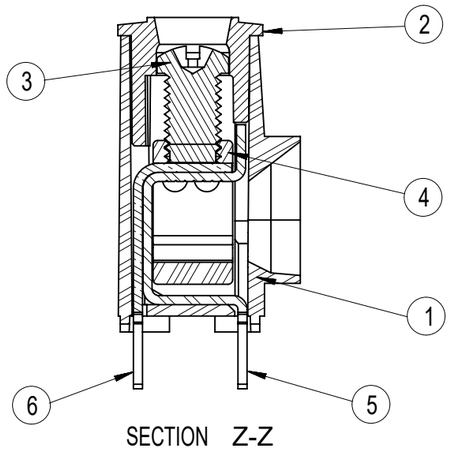

SECTION Z-Z

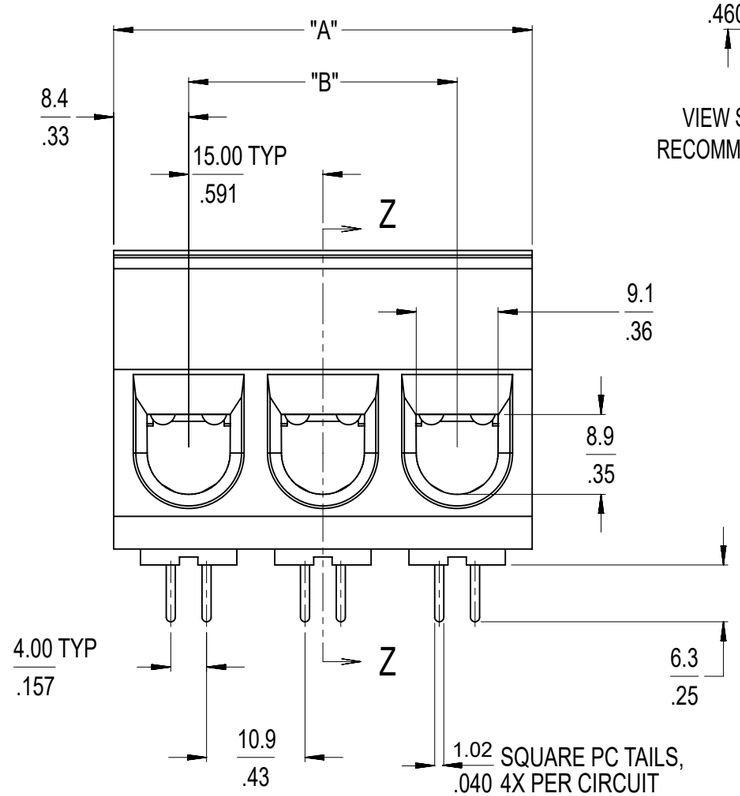

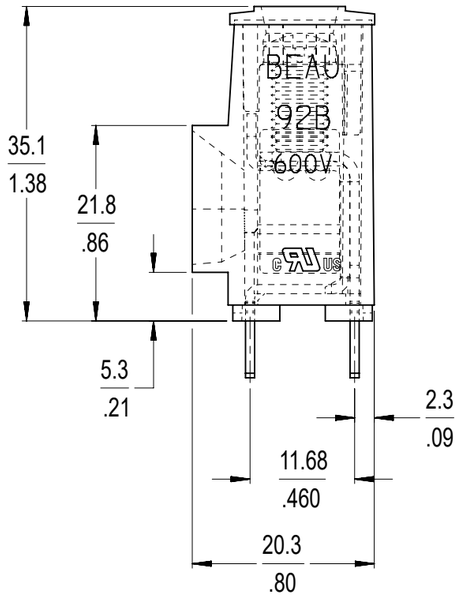

NOTES:

1. MATERIAL: SEE TABLE
2. FINISIHES: SEE TABLE
3. "XX" REFERS TO THE QUANTITY OF CIRCUITS.
4. ASSEMBLY IS ROHS COMPLIANT BY EXEMPTION.
   COMPONENTS MARKED WITH AN ASTERISK (*) ARE ROHS
   COMPLIANT BY EXEMPTION, ALL OTHERS ARE ROHS COMPLIANT.

ITEM	QTY.	DESCRIPTION	MATERIAL	FINISH
6	"XX"	OUTER TERMINAL	COPPER	TIN PLATE
5	"XX"	INNER TERMINAL	COPPER	TIN PLATE
4	"XX"	CAGE (*)	BRASS	NICKEL PLATE
3	"XX"	SCREW, 1/4-28, POZI-SLOT, TIN/SS	ST. STEEL	TIN PLATE
2	1	COVER	PBT	BLACK
1	1	BODY	PBT	BLACK

DOCUMENT STATUS	P1	RELEASE DATE	2024/08/20 07:34:14

THIS DRAWING CONTAINS INFORMATION THAT IS PROPRIETARY TO MOLEX ELECTRONIC TECHNOLOGIES, LLC AND SHOULD NOT BE USED WITHOUT WRITTEN PERMISSION

DIMENSION UNITS: mm/IN | SCALE: 3:2

GENERAL TOLERANCES (UNLESS SPECIFIED)

	MM	INCH
4 PLACES	±	±
3 PLACES	±	± 0.005
2 PLACES	± 0.13	± 0.01
1 PLACE	± 0.3	±
0 PLACES	±	±
ANGULAR TOL	± 2.0 °	

DRAFT WHERE APPLICABLE MUST REMAIN WITHIN DIMENSIONS

CURRENT REV DESC: REMOVED OBSOLETED PART NUMBERS AS PER PCN#515181

EC NO:	794166	
DRWN:	VISHAH2	2024/06/06
CHK'D:	GGA	2024/08/20
APPR:	GGA	2024/08/20
INITIAL REVISION:		
DRWN:	C.YORK	2007/09/12
APPR:	J.MACNEIL	2007/09/12

THIRD ANGLE PROJECTION | DRAWING: B-SIZE | SERIES: 39920

molex

15.00/.591 SR BTS, PC,
#1-#8 AWG ASST, 600V, 115A, SS SCREW

PRODUCT CUSTOMER DRAWING

DOCUMENT NUMBER	DOC TYPE	DOC PART	REVISION
SD-39920-002	PSD	001	A2

MATERIAL NUMBER	CUSTOMER	SHEET NUMBER
SEE CHART	GENERAL MARKET	1 OF 1

FORMAT: Eng-lega-master-tb-prod-B
REVISION: E1
DATE: 2021/05/01