CKTS	DIM A	DIM B	DIM C	⌓
4	5.08	2.54	NA	0.10
6	7.62	5.08	2.54	0.10
8	10.16	7.62	5.08	0.10
10	12.70	10.16	7.62	0.10
12	15.24	12.70	10.16	0.10
14	17.78	15.24	12.70	0.10
16	20.32	17.78	15.24	0.10
18	22.86	20.32	17.78	0.10
20	25.40	22.86	20.32	0.10
22	27.94	25.40	22.86	0.15
24	30.48	27.94	25.40	0.15
26	33.02	30.48	27.94	0.15
28	35.56	33.02	30.48	0.15
30	38.10	35.56	33.02	0.15
32	40.64	38.10	35.56	0.15
34	43.18	40.64	38.10	0.15
36	45.72	43.18	40.64	0.15
38	48.26	45.72	43.18	0.15
40	50.80	48.26	45.72	0.15
42	53.34	50.80	48.26	0.23
44	55.88	53.34	50.80	0.23
46	58.42	55.88	53.34	0.23
48	60.96	58.42	55.88	0.23
50	63.50	60.96	58.42	0.23
52	66.04	63.50	60.96	0.23
54	68.58	66.04	63.50	0.23
56	71.12	68.58	66.04	0.23
58	73.66	71.12	68.58	0.23
60	76.20	73.66	71.12	0.23
62	78.74	76.20	73.66	0.30
64	81.28	78.74	76.20	0.30
66	83.82	81.28	78.74	0.30
68	86.36	83.82	81.28	0.30
70	88.90	86.36	83.82	0.30
72	91.44	88.90	86.36	0.30
74	93.98	91.44	88.90	0.30
76	96.52	93.98	91.44	0.30
78	99.06	96.52	93.98	0.30
80	101.60	99.06	96.52	0.30
90	114.30	111.76	109.22	0.38
100	127.00	124.46	122.06	0.38

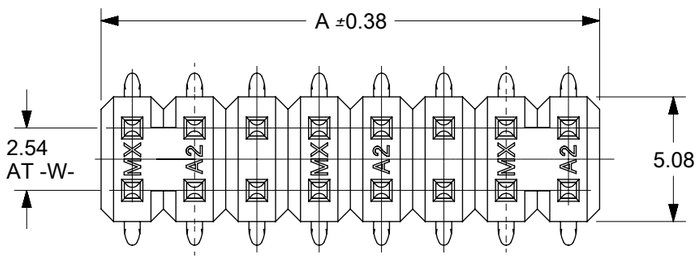

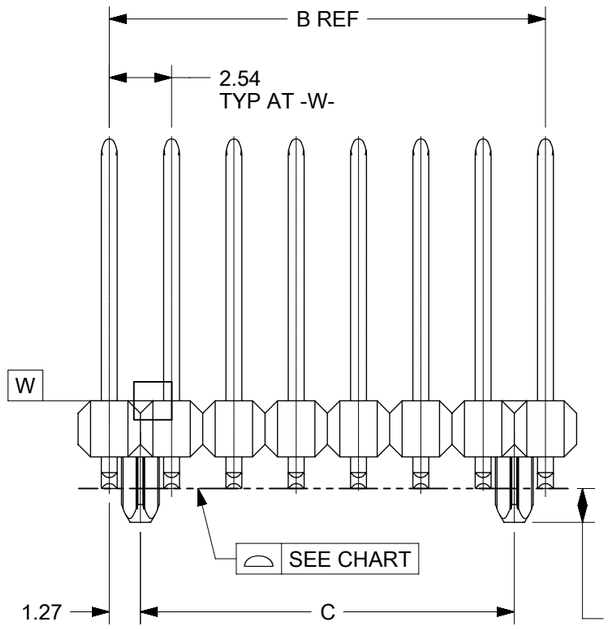

PEG OPTIONS
NO PEG
1.40 = SHORT PEG
3.30 = LONG PEG

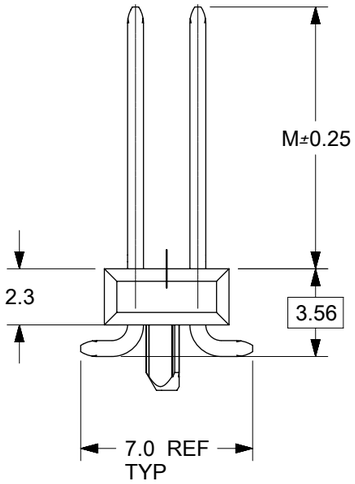

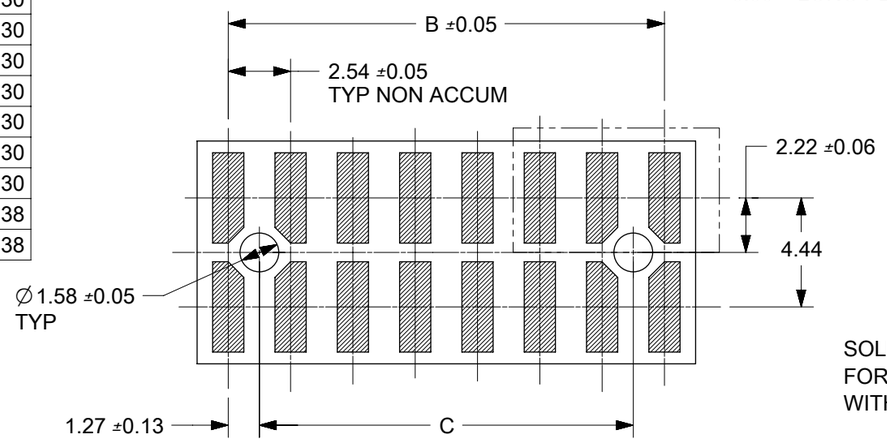

PCB LAYOUT: COMPONENT SIDE
(FOR CKT 04,06 AND 08 REFER SHEET 2)

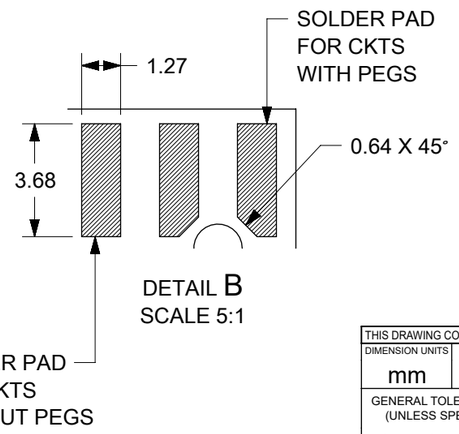

NOTES:
1. HOUSING MATERIAL: LCP, UL 94V-0 COLOR: BLACK
   PIN MATERIAL: COPPER ALLOY
2. FINISH:
   124 = BRIGHT TIN: 3.81 MICROMETERS MIN OVER MATTE NICKEL
   207 = SELECT GOLD: 0.38 MICROMETERS MIN IN CONTACT AREA
   SELECT BRIGHT TIN: 2.0 MICROMETERS MIN IN SMT TAIL
   BOTH OVER NICKEL.
   206 = SELECT GOLD: 0.75 MICROMETERS MIN IN CONTACT AREA
   SELECT BRIGHT TIN: 2.0 MICROMETERS MIN IN SMT TAIL
   BOTH OVER NICKEL.
   197 = REFLOW MATTE TIN: 1.52 MICROMETERS MIN OVER MATTE NICKEL
   222 = MATTE TIN: 2.54 MICROMETERS MIN OVER MATTE NICKEL
   118 = BRIGHT TIN: 1.52 MICROMETERS MIN OVER NICKEL
3. PRODUCT SPECIFICATION: PS-71308
4. PACKAGING SPECIFICATION: SEE CHART
5. COSMETIC SPECIFICATION: PS-45499-002 CLASS B
6. SOLDERABILITY SPECIFICATION: SMES-152

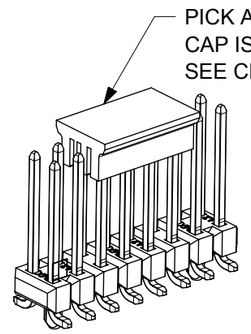

DRAWING SHEET INDEX		
SHEET NO	PEG STYLE	DIM M MATING HEIGHT
2	NONE	6.10
3	NONE	6.10
4	NONE	8.13
5	LONG	6.10
6	LONG	8.13
7	SHORT	6.10
8	SHORT	8.13
9	PARTS WITH VOIDS	

THIS DRAWING CONTAINS INFORMATION THAT IS PROPRIETARY TO MOLEX ELECTRONIC TECHNOLOGIES, LLC AND SHOULD NOT BE USED WITHOUT WRITTEN PERMISSION

DIMENSION UNITS: mm | SCALE: 3:1

GENERAL TOLERANCES (UNLESS SPECIFIED)

ANGULAR TOL	±	°
4 PLACES	±	
3 PLACES	±	
2 PLACES	±	0.13
1 PLACE	±	0.25
0 PLACES	±	0.0

DRAFT WHERE APPLICABLE MUST REMAIN WITHIN DIMENSIONS

CURRENT REV DESC:

EC NO: 838183
DRWN: MEGHRB 2025/10/17
CHK'D: GANESY 2025/10/24
APPR: GANESY 2025/10/24

INITIAL REVISION:
DRWN: KSAMIEC 2017/09/07
APPR: FSMITH 2018/07/03

THIRD ANGLE PROJECTION | DRAWING: A3-SIZE | SERIES: 71308

molex

CGRID HEADER ASSY VERTICAL DUAL ROW SMT

PRODUCT CUSTOMER DRAWING

DOCUMENT NUMBER	DOC TYPE	DOC PART	REVISION
713080000-SD	PSD	000	A12

MATERIAL NUMBER: SEE TABLE | CUSTOMER | SHEET NUMBER: 1 OF 10

DOCUMENT STATUS	P1	RELEASE DATE	2025/10/24 05:59:18

FORMAT: master-ib-prod-A3
REVISION: J1
DATE: 2021/05/01

PICK AND PLACE CAP POSITION TO CONNECTOR

FOR CKT 04 and 08

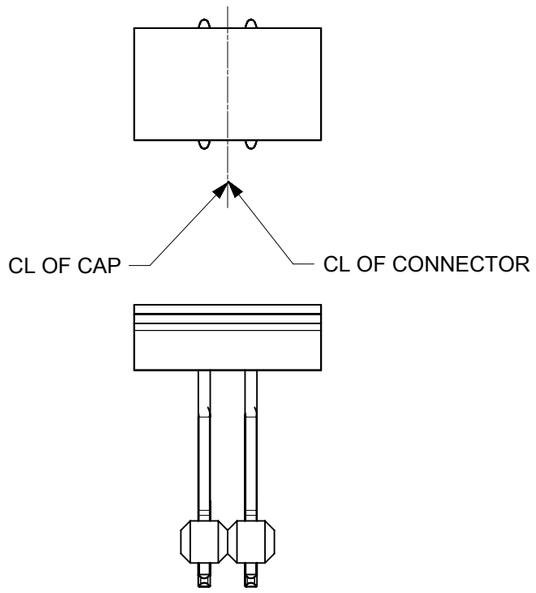

FOR CKT 06

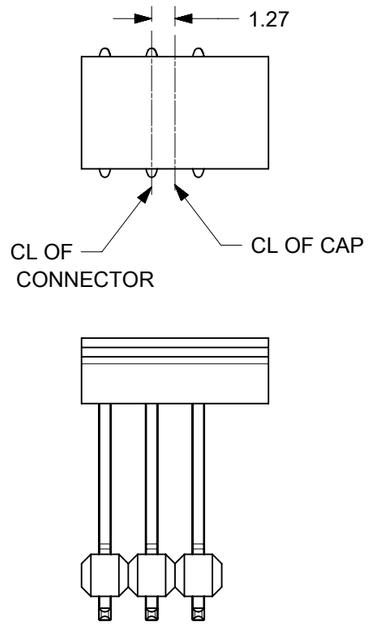

FOR CKT 12,16,20,24,28,32,36,40,44,48,52,56,60
64,68,72,76,80,84,88,92,96 and 100

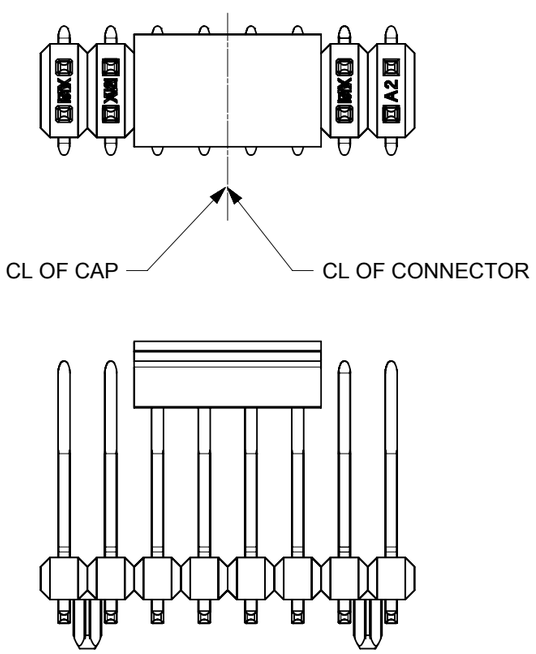

FOR CKT 10,14,18,22,26,30,34,38,42,46,50,54,58
62,66,70,74,78,82,86,90,94 and 98

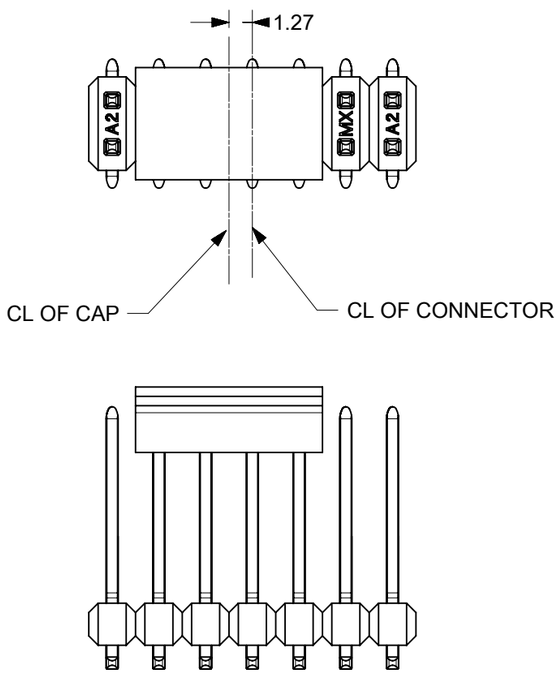

PICK AND PLACE CAP DIMENSIONS

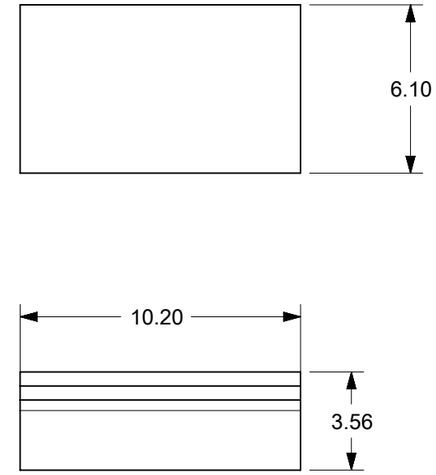

KEEP OUT ZONE FOR CKT 04, 06 and 08
AS CAP DIM IS LARGER THAN PART DIM

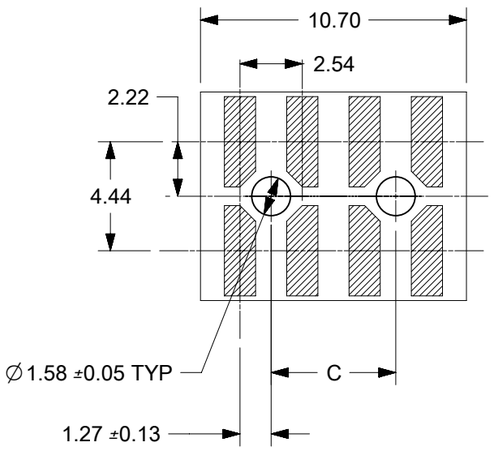

THIS DRAWING CONTAINS INFORMATION THAT IS PROPRIETARY TO MOLEX ELECTRONIC TECHNOLOGIES, LLC AND SHOULD NOT BE USED WITHOUT WRITTEN PERMISSION

DIMENSION UNITS	SCALE
mm	5:1

GENERAL TOLERANCES (UNLESS SPECIFIED)

ANGULAR TOL	±	°
4 PLACES	±	
3 PLACES	±	
2 PLACES	±	0.13
1 PLACE	±	0.25
0 PLACES	±	0.0

DRAFT WHERE APPLICABLE MUST REMAIN WITHIN DIMENSIONS

CURRENT REV DESC:

EC NO: 838183
DRWN: MEGHRB 2025/10/17
CHK'D: GANESY 2025/10/24
APPR: GANESY 2025/10/24

INITIAL REVISION:
DRWN: KSAMIEC 2017/09/07
APPR: FSMITH 2018/07/03

molex

CGRID HEADER ASSY VERTICAL DUAL ROW SMT

PRODUCT CUSTOMER DRAWING

DOCUMENT NUMBER	DOC TYPE	DOC PART	REVISION
713080000-SD	PSD	000	A12

THIRD ANGLE PROJECTION	DRAWING	SERIES	MATERIAL NUMBER	CUSTOMER	SHEET NUMBER
	A3-SIZE	71308	SEE TABLE		2 OF 10

DOCUMENT STATUS	P1	RELEASE DATE	2025/10/24 05:59:18

FORMAT: master-tb-prod-A3
REVISION: J1
DATE: 2021/05/01

PLATING:	124 - BRIGHT TIN	124 - BRIGHT TIN	124 - BRIGHT TIN	207 - 0.38 SGOLD	207 - 0.38 SGOLD	207 - 0.38 SGOLD	206 - 0.76 SGOLD	206 - 0.76 SGOLD	206 - 0.76 SGOLD
PACKAGING:	TUBE 713080001-PK	TUBE 713080002-PK	T&R 713080000-PK STYLE A	TUBE 713080001-PK	TUBE 713080002-PK	T&R 713080000-PK STYLE A	TUBE 713080001-PK	TUBE 713080002-PK	T&R 713080000-PK STYLE A
PICK AND PLACE CAPS	NO	YES	YES	NO	YES	YES	NO	YES	YES
CKTS:	MATERIAL NO	MATERIAL NO	MATERIAL NO	MATERIAL NO	MATERIAL NO	MATERIAL NO	MATERIAL NO	MATERIAL NO	MATERIAL NO
4	015-91-2040	NA	015-91-6040	015-91-0040	NA	015-91-6042	015-91-3040	NA	
6	015-91-2060 / 71308-9060	NA	015-91-6060	015-91-0060	NA	015-91-6062	015-91-3060 / 71308-9061	NA	015-91-6063
8	015-91-2080 / 71308-9080	015-91-3087	015-91-6080	015-91-0080		015-91-6082	015-91-3080		015-91-6083
10	015-91-2100	015-91-3107	015-91-6100	015-91-0100		015-91-6102	015-91-3100 / 71308-3110	015-91-3108	015-91-6103
12	015-91-2120		015-91-6120	015-91-0120		015-91-6122	015-91-3120	015-91-3128	015-91-6123
14	015-91-2140		015-91-6140	015-91-0140 / 71308-9140		015-91-6142	015-91-3140		015-91-6143
16	015-91-2160		015-91-6160	015-91-0160		015-91-6162	015-91-3160	015-91-3168	015-91-6163
18	015-91-2180	015-91-3187		015-91-0180			015-91-3180	015-91-3188	
20	015-91-2200	015-91-3207	015-91-6200	015-91-0200 / 71308-9200		015-91-6202	015-91-3200		015-91-6203
22	015-91-2220	015-91-3227		015-91-0220	015-91-3226		015-91-3220	015-91-3228	
24	015-91-2240		71308-2240	015-91-0240	015-91-3246		015-91-3240	015-91-3248	
26	015-91-2260			015-91-0260		015-91-6262	015-91-3260		
28	015-91-2280	015-91-3287		015-91-0280	015-91-3286		015-91-3280	015-91-3288	
30	015-91-2300	015-91-3307		015-91-0300			015-91-3300	015-91-3308	
32	015-91-2320			015-91-0320	015-91-3326		015-91-3320	015-91-3328	
34	015-91-2340			015-91-0340			015-91-3340	015-91-3348	
36	015-91-2360	015-91-3367		015-91-0360	015-91-3366		015-91-3360	015-91-3368	
38	015-91-2380	015-91-3387		015-91-0380	015-91-3386		015-91-3380	015-91-3388	
40	015-91-2400	015-91-3407		015-91-0400			015-91-3400	015-91-3408	
42	015-91-2420	015-91-3427		015-91-0420	015-91-3426		015-91-3420	015-91-3428	
44	015-91-2440	015-91-3447		015-91-0440	015-91-3446		015-91-3440	015-91-3448	
46	015-91-2460	015-91-3467		015-91-0460	71308-0546		015-91-3460	015-91-3468	
48	015-91-2480	015-91-3487		015-91-0480	015-91-3486				
50	015-91-2500	015-91-3507		015-91-0500			015-91-3500	015-91-3508	
52	015-91-2520	015-91-3527		015-91-0520	015-91-3526		015-91-3520	015-91-3528	
54	015-91-2540	015-91-3547		015-91-0540	015-91-3546		015-91-3540	015-91-3548	
56	015-91-2560	015-91-3567		015-91-0560	015-91-3566		015-91-3560	015-91-3568	
58	015-91-2580	015-91-3587		015-91-0580	015-91-3586		015-91-3580	015-91-3588	
60	015-91-2600	015-91-3607		015-91-0600	015-91-3606		015-91-3600	015-91-3608	
62	015-91-2620	015-91-3627		015-91-0620	015-91-3626				
64	015-91-2640	015-91-3647		015-91-0640	015-91-3646		015-91-3640	015-91-3648	
66	015-91-2660	015-91-3667		015-91-0660	015-91-3666		015-91-3660	015-91-3668	
68	015-91-2680	015-91-3687		015-91-0680	015-91-3686		015-91-3680	015-91-3688	
70	015-91-2700	015-91-3707		015-91-0700	015-91-3706		015-91-3700	015-91-3708	
72	015-91-2720	015-91-3727		015-91-0720	015-91-3726		015-91-3720	015-91-3728	
74	015-91-2740	015-91-3747		015-91-0740	015-91-3746		015-91-3740	015-91-3748	
76	015-91-2760	015-91-3767		015-91-0760	015-91-3766		015-91-3760	015-91-3768	
78	015-91-2780	015-91-3787		015-91-0780	015-91-3786		015-91-3780	015-91-3788	
80	015-91-2800	015-91-3807		015-91-0800	015-91-3806		015-91-3800		
90				71308-0190					
100	71308-0101	71308-0500		71308-0200	71308-0600		71308-0300	71308-0700	

PARTS ON THIS SHEET ARE
WITHOUT PEGS
WITH 6.10 MATING LENGTH

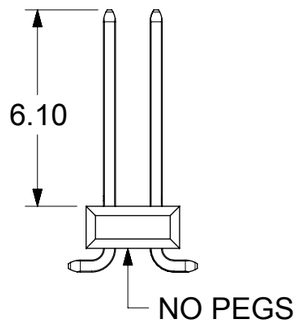

THIS DRAWING CONTAINS INFORMATION THAT IS PROPRIETARY TO MOLEX ELECTRONIC TECHNOLOGIES, LLC AND SHOULD NOT BE USED WITHOUT WRITTEN PERMISSION

DIMENSION UNITS	SCALE
mm	1:1

GENERAL TOLERANCES (UNLESS SPECIFIED)

ANGULAR TOL	±	°
4 PLACES	±	
3 PLACES	±	
2 PLACES	±	0.13
1 PLACE	±	0.25
0 PLACES	±	0.0

DRAFT WHERE APPLICABLE MUST REMAIN WITHIN DIMENSIONS

CURRENT REV DESC:

EC NO: 838183
DRWN: MEGHRB 2025/10/17
CHK'D: GANESY 2025/10/24
APPR: GANESY 2025/10/24

INITIAL REVISION:
DRWN: KSAMIEC 2017/09/07
APPR: FSMITH 2018/07/03

molex

CGRID HEADER ASSY VERTICAL DUAL ROW SMT

PRODUCT CUSTOMER DRAWING

DOCUMENT NUMBER	DOC TYPE	DOC PART	REVISION
713080000-SD	PSD	000	A12

THIRD ANGLE PROJECTION	DRAWING	SERIES	MATERIAL NUMBER	CUSTOMER	SHEET NUMBER
	A3-SIZE	71308	SEE TABLE		3 OF 10

DOCUMENT STATUS	P1	RELEASE DATE	2025/10/24 05:59:18

FORMAT: master-tb-prod-A3
REVISION: J1
DATE: 2021/05/01

PLATING:	197 - REFLOW TIN	207 - 0.38 SGOLD	118 - BRIGHT TIN	118 - BRIGHT TIN	118 - BRIGHT TIN	197 - REFLOW TIN	197 - REFLOW TIN		
PACKAGING:	TUBE 713080001-PK	T&R 713080000-PK	TUBE 713080001-PK	T&R 713080000-PK STYLE A	TUBE 713080002-PK	T&R 713080000-PK STYLE A	T&R 713080000-PK STYLE A		
PICK AND PLACE CAPS	NO	YES	NO	YES	YES	YES	YES		
CKTS:	MATERIAL NO	MATERIAL NO	MATERIAL NO	MATERIAL NO	MATERIAL NO	MATERIAL NO	MATERIAL NO	MATERIAL NO	MATERIAL NO
4	71308-2104		71308-5404		NA				
6	71308-2106		71308-5406		NA				
8	71308-2108		71308-5408						
10	71308-2110	71308-3111 (A7)	71308-5410				71308-1810		
12	71308-2112		71308-5412	71308-5512					
14	71308-2114		71308-5414						
16	71308-2116		71308-5416	71308-5516		71308-1561			
18	71308-2118		71308-5418						
20	71308-2120		71308-5420						
22	71308-2122		71308-5422						
24	71308-2124		71308-5424						
26	71308-2126		71308-5426						
28	71308-2128		71308-5428						
30	71308-2130		71308-5430						
32	71308-2132		71308-5432						
34	71308-2134		71308-5434						
36	71308-2136		71308-5436						
38	71308-2138		71308-5438						
40	71308-2140		71308-5440						
42	71308-2142		71308-5442						
44	71308-2144		71308-5444						
46	71308-2146		71308-5446						
48	71308-2148		71308-5448						
50	71308-2150		71308-5450						
52	71308-2152		71308-5452						
54	71308-2154		71308-5454						
56	71308-2156		71308-5456						
58	71308-2158		71308-5458						
60	71308-2160		71308-5460						
62	71308-2162		71308-5462						
64	71308-2164		71308-5464						
66	71308-2166		71308-5466						
68	71308-2168		71308-5468						
70	71308-2170		71308-5470						
72	71308-2172		71308-5472						
74	71308-2174		71308-5474						
76	71308-2176		71308-5476						
78	71308-2178		71308-5478						
80	71308-2180		71308-5480						
100			71308-5500						

PARTS ON THIS SHEET ARE
WITHOUT PEGS
WITH 6.10 MATING LENGTH

CONTINUED FROM SHEET 2

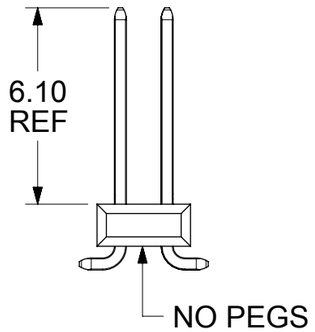

THIS DRAWING CONTAINS INFORMATION THAT IS PROPRIETARY TO MOLEX ELECTRONIC TECHNOLOGIES, LLC AND SHOULD NOT BE USED WITHOUT WRITTEN PERMISSION

DIMENSION UNITS	SCALE
mm	1:1

GENERAL TOLERANCES (UNLESS SPECIFIED)

ANGULAR TOL	±	°
4 PLACES	±	
3 PLACES	±	
2 PLACES	±	0.13
1 PLACE	±	0.25
0 PLACES	±	0.0

DRAFT WHERE APPLICABLE MUST REMAIN WITHIN DIMENSIONS

CURRENT REV DESC:

EC NO: 838183
DRWN: MEGHRB 2025/10/17
CHK'D: GANESY 2025/10/24
APPR: GANESY 2025/10/24

INITIAL REVISION:
DRWN: KSAMIEC 2017/09/07
APPR: FSMITH 2018/07/03

molex

CGRID HEADER ASSY VERTICAL DUAL ROW SMT

PRODUCT CUSTOMER DRAWING

DOCUMENT NUMBER	DOC TYPE	DOC PART	REVISION
713080000-SD	PSD	000	A12

THIRD ANGLE PROJECTION	DRAWING	SERIES	MATERIAL NUMBER	CUSTOMER	SHEET NUMBER
	A3-SIZE	71308	SEE TABLE		4 OF 10

DOCUMENT STATUS	P1	RELEASE DATE	2025/10/24 05:59:18

FORMAT: master-tb-prod-A3
REVISION: J1
DATE: 2021/05/01

PLATING:	124 - BRIGHT TIN	124 - BRIGHT TIN	197 - REFLOW TIN	197 - REFLOW TIN	207 - 0.38 SGOLD	207 - 0.38 SGOLD	206 - 0.76 SGOLD	118 - BRIGHT TIN	118 - BRIGHT TIN	
PACKAGING:	TUBE 713080003-PK	T&R 713080000-PK STYLE B	TUBE 713080003-PK	T&R 713080000-PK STYLE B	TUBE 713080003-PK	T&R 713080000-PK STYLE B	TUBE 713080003-PK	T&R 713080000-PK STYLE B	TUBE 713080003-PK	
PICK AND PLACE CAPS	NO	YES	NO	YES	NO	YES	NO	YES	NO	
CKTS:	MATERIAL NO	MATERIAL NO	MATERIAL NO	MATERIAL NO	MATERIAL NO	MATERIAL NO	MATERIAL NO	MATERIAL NO	MATERIAL NO	MATERIAL NO
4	71308-8004				015-91-0048		015-91-5049			
6	71308-8006				015-91-0068		015-91-5069			
8	71308-8008				015-91-0088	71308-6908	015-91-5089			
10	71308-8010				015-91-0108		015-91-5109		71308-5810	
12	71308-8012				015-91-0128					
14	71308-8014				015-91-0148					
16	71308-8016		71308-8017	71308-0015	015-91-0168		015-91-5169		71308-5816	
18	71308-8018				015-91-0188		015-91-5189			
20	71308-8020				015-91-0208		015-91-5209			
22	71308-8022				015-91-0228		015-91-5229			
24	71308-8024	71308-8124			015-91-0248		015-91-5249	71308-5724	71308-5824	
26	71308-8026				015-91-0268		015-91-5269			
28	71308-8028				015-91-0288		015-91-5289			
30	71308-8030				015-91-0308		015-91-5309			
32	71308-8032									
34	71308-8034				015-91-0348		015-91-5349			
36	71308-8036				015-91-0368		015-91-5369			
38	71308-8038				015-91-0388		015-91-5389			
40	71308-8040				015-91-0408		015-91-5409			
42	71308-8042				015-91-0428		015-91-5429			
44	71308-8044				015-91-0448		015-91-5449			
46	71308-8046				015-91-0468		015-91-5469			
48	71308-8048				015-91-0488		015-91-5489			
50	71308-8050				015-91-0508		015-91-5509			
52	71308-8052				015-91-0528		015-91-5529			
54	71308-8054				015-91-0548		015-91-5549			
56	71308-8056				015-91-0568		015-91-5569			
58	71308-8058				015-91-0588		015-91-5589			
60	71308-8060				015-91-0608		015-91-5609			
62	71308-8062				015-91-0628		015-91-5629			
64	71308-8064				015-91-0648		015-91-5649			
66	71308-8066				015-91-0668		015-91-5669			
68	71308-8068				015-91-0688		015-91-5689			
70	71308-8070				015-91-0708		015-91-5709			
72	71308-8072				015-91-0728		015-91-5729			
74	71308-8074				015-91-0748		015-91-5749			
76	71308-8076				015-91-0768		015-91-5769			
78	71308-8078				015-91-0788		015-91-5789			
80	71308-8080				015-91-0808		015-91-5809			
100					71308-1200		71308-1300			

PARTS ON THIS SHEET ARE
WITHOUT PEGS
WITH A MATING HEIGHT OF 8.13

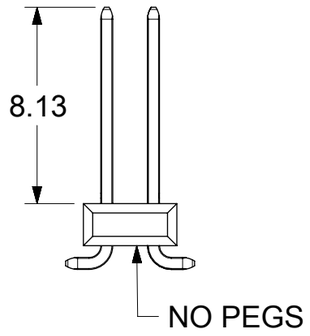

THIS DRAWING CONTAINS INFORMATION THAT IS PROPRIETARY TO MOLEX ELECTRONIC TECHNOLOGIES, LLC AND SHOULD NOT BE USED WITHOUT WRITTEN PERMISSION

DIMENSION UNITS	SCALE
mm	1:1

GENERAL TOLERANCES (UNLESS SPECIFIED)

ANGULAR TOL	±	°
4 PLACES	±	
3 PLACES	±	
2 PLACES	±	0.13
1 PLACE	±	0.25
0 PLACES	±	0.0

DRAFT WHERE APPLICABLE MUST REMAIN WITHIN DIMENSIONS

CURRENT REV DESC:

EC NO: 838183
DRWN: MEGHRB 2025/10/17
CHK'D: GANESY 2025/10/24
APPR: GANESY 2025/10/24

INITIAL REVISION:
DRWN: KSAMIEC 2017/09/07
APPR: FSMITH 2018/07/03

molex

CGRID HEADER ASSY VERTICAL DUAL ROW SMT

PRODUCT CUSTOMER DRAWING

DOCUMENT NUMBER	DOC TYPE	DOC PART	REVISION
713080000-SD	PSD	000	A12

THIRD ANGLE PROJECTION	DRAWING	SERIES	MATERIAL NUMBER	CUSTOMER	SHEET NUMBER
	A3-SIZE	71308	SEE TABLE		5 OF 10

DOCUMENT STATUS	P1	RELEASE DATE	2025/10/24 05:59:18

FORMAT: master-tb-prod-A3
REVISION: J1
DATE: 2021/05/01

PLATING:	124 - BRIGHT TIN	207 - 0.38 SGOLD	206 - 0.76 SGOLD	124 - BRIGHT TIN	207 - 0.38 GOLD	206 - 0.76 GOLD	118 - BRIGHT TIN	118 - BRIGHT TIN
PACKAGING:	TUBE 713080001-PK	TUBE 713080001-PK	TUBE 713080001-PK	T&R 713080000-PK STYLE C	T&R 713080000-PK STYLE C	T&R 713080000-PK STYLE C	TUBE 713080001-PK	T&R 713080000-PK STYLE C
PICK AND PLACE CAPS	NO	NO	NO	YES	YES	YES	NO	YES
CKTS:	MATERIAL NO	MATERIAL NO	MATERIAL NO	MATERIAL NO	MATERIAL NO	MATERIAL NO	MATERIAL NO	MATERIAL NO
4	015-91-1041	015-91-1042	015-91-1043			015-91-6046	71308-6404	
6	015-91-1061	015-91-1062	015-91-1063	015-91-6064		015-91-6066	71308-6406	
8	015-91-1081	015-91-1082	015-91-1083				71308-6408	
10	015-91-1101	015-91-1102 / 71308-1102	015-91-1103		015-91-6105		71308-6410	
12	015-91-1121	015-91-1122	015-91-1123				71308-6412	
14	015-91-1141	015-91-1142	015-91-1143		015-91-6145		71308-6414	71308-6514
16	015-91-1161	015-91-1162	015-91-1163				71308-6416	
18	015-91-1181	015-91-1182	015-91-1183				71308-6418	
20	015-91-1201	015-91-1202	015-91-1203				71308-6420	
22	015-91-1221	015-91-1222	015-91-1223				71308-6422	
24	015-91-1241	015-91-1242	015-91-1243	71308-6901			71308-6424	
26	015-91-1261	015-91-1262	015-91-1263				71308-6426	
28	015-91-1281	015-91-1282	015-91-1283				71308-6428	
30	015-91-1301	015-91-1302	015-91-1303				71308-6430	
32	015-91-1321	015-91-1322	015-91-1323				71308-6432	
34	015-91-1341	015-91-1342	015-91-1343				71308-6434	
36	015-91-1361	015-91-1362	015-91-1363				71308-6436	
38	015-91-1381	015-91-1382	015-91-1383				71308-6438	
40	015-91-1401	015-91-1402	015-91-1403				71308-6440	
42	015-91-1421	015-91-1422	015-91-1423				71308-6442	
44	015-91-1441	015-91-1442	015-91-1443				71308-6444	
46	015-91-1461	015-91-1462	015-91-1463				71308-6446	
48	015-91-1481	015-91-1482	015-91-1483				71308-6448	
50	015-91-1501	015-91-1502	015-91-1503				71308-6450	
52	015-91-1521	015-91-1522	015-91-1523			71308-5203	71308-6452	
54	015-91-1541	015-91-1542	015-91-1543				71308-6454	
56	015-91-1561	015-91-1562	015-91-1563				71308-6456	
58	015-91-1581	015-91-1582	015-91-1583				71308-6458	
60	015-91-1601	015-91-1602	015-91-1603				71308-6460	
62	015-91-1621	015-91-1622	015-91-1623				71308-6462	
64	015-91-1641	015-91-1642	015-91-1643				71308-6464	
66	015-91-1661	015-91-1662	015-91-1663				71308-6466	
68	015-91-1681	015-91-1682	015-91-1683				71308-6468	
70	015-91-1701	015-91-1702	015-91-1703				71308-6470	
72	015-91-1721	015-91-1722	015-91-1723				71308-6472	
74	015-91-1741	015-91-1742	015-91-1743				71308-6474	
76	015-91-1761	015-91-1762	015-91-1763				71308-6476	
78	015-91-1781	015-91-1782	015-91-1783				71308-6478	
80	015-91-1801	015-91-1802	015-91-1803				71308-6480	
100	71308-4100	71308-4200	71308-4300					

PARTS ON THIS SHEET
HAVE LONG PEGS
WITH A MATING HEIGHT OF 6.10

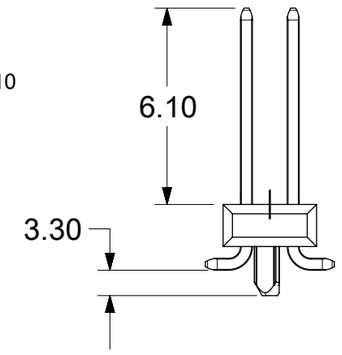

THIS DRAWING CONTAINS INFORMATION THAT IS PROPRIETARY TO MOLEX ELECTRONIC TECHNOLOGIES, LLC AND SHOULD NOT BE USED WITHOUT WRITTEN PERMISSION

DIMENSION UNITS	SCALE
mm	1:1

GENERAL TOLERANCES (UNLESS SPECIFIED)

ANGULAR TOL	±	°
4 PLACES	±	
3 PLACES	±	
2 PLACES	±	0.13
1 PLACE	±	0.25
0 PLACES	±	0.0

DRAFT WHERE APPLICABLE MUST REMAIN WITHIN DIMENSIONS

CURRENT REV DESC:

EC NO: 838183
DRWN: MEGHRB 2025/10/17
CHK'D: GANESY 2025/10/24
APPR: GANESY 2025/10/24

INITIAL REVISION:
DRWN: KSAMIEC 2017/09/07
APPR: FSMITH 2018/07/03

molex

CGRID HEADER ASSY VERTICAL DUAL ROW SMT

PRODUCT CUSTOMER DRAWING

DOCUMENT NUMBER	DOC TYPE	DOC PART	REVISION
713080000-SD	PSD	000	A12

THIRD ANGLE PROJECTION	DRAWING	SERIES	MATERIAL NUMBER	CUSTOMER	SHEET NUMBER
	A3-SIZE	71308	SEE TABLE		6 OF 10

DOCUMENT STATUS	P1	RELEASE DATE	2025/10/24 05:59:18

FORMAT: master-tb-prod-A3
REVISION: J1
DATE: 2021/05/01

PLATING:	124 - BRIGHT TIN	207- 0.38 SGOLD	206- 0.76 SGOLD	118 - BRIGHT TIN				
PACKAGING:	TUBE 713080003-PK	TUBE 713080003-PK	TUBE 713080003-PK	TUBE 713080003-PK				
PICK AND PLACE CAPS	NO	NO	NO	NO				
CKTS:	MATERIAL NO	MATERIAL NO	MATERIAL NO	MATERIAL NO	MATERIAL NO	MATERIAL NO	MATERIAL NO	MATERIAL NO
4	015-91-1044	015-91-0047	015-91-1040	71308-6604				
6	015-91-1064	015-91-0067	015-91-1060	71308-6606				
8	015-91-1084	015-91-0087	015-91-1080	71308-6608				
10	015-91-1104	015-91-0107	015-91-1100	71308-6610				
12	015-91-1124	015-91-0127	015-91-1120	71308-6612				
14	015-91-1144	015-91-0147	015-91-1140	71308-6614				
16	015-91-1164	015-91-0167	015-91-1160	71308-6616				
18	015-91-1184	015-91-0187	015-91-1180	71308-6618				
20	015-91-1204	015-91-0207	015-91-1200	71308-6620				
22	015-91-1224	015-91-0227	015-91-1220	71308-6622				
24	015-91-1244	015-91-0247	015-91-1240	71308-6624				
26	015-91-1264	015-91-0267	015-91-1260	71308-6626				
28	015-91-1284	015-91-0287	015-91-1280	71308-6628				
30	015-91-1304	015-91-0307	015-91-1300	71308-6630				
32	015-91-1324	015-91-0327	015-91-1320	71308-6632				
34	015-91-1344	015-91-0347	015-91-1340	71308-6634				
36	015-91-1364	015-91-0367	015-91-1360	71308-6636				
38	015-91-1384	015-91-0387	015-91-1380	71308-6638				
40	015-91-1404	015-91-0407	015-91-1400	71308-6640				
42	015-91-1424	015-91-0427	015-91-1420	71308-6642				
44	015-91-1444	015-91-0447	015-91-1440	71308-6644				
46	015-91-1464	015-91-0467	015-91-1460	71308-6646				
48	015-91-1484	015-91-0487	015-91-1480	71308-6648				
50	015-91-1504	015-91-0507	015-91-1500	71308-6650				
52	015-91-1524	015-91-0527	015-91-1520	71308-6652				
54	015-91-1544	015-91-0547	015-91-1540	71308-6654				
56	015-91-1564	015-91-0567	015-91-1560	71308-6656				
58	015-91-1584	015-91-0587	015-91-1580	71308-6658				
60	015-91-1604	015-91-0607	015-91-1600	71308-6660				
62	015-91-1624	015-91-0627	015-91-1620	71308-6662				
64	015-91-1644	015-91-0647	015-91-1640	71308-6664				
66	015-91-1664	015-91-0667	015-91-1660	71308-6666				
68	015-91-1684	015-91-0687	015-91-1680	71308-6668				
70	015-91-1704	015-91-0707	015-91-1700	71308-6670				
72	015-91-1724	015-91-0727	015-91-1720	71308-6672				
74	015-91-1744	015-91-0747	015-91-1740	71308-6674				
76	015-91-1764	015-91-0767	015-91-1760	71308-6676				
78	015-91-1784	015-91-0787	015-91-1780	71308-6678				
80	015-91-1804	015-91-0807	015-91-1800	71308-6680				
100	71308-5100	71308-5200	71308-5300					

PARTS ON THIS SHEET HAVE
LONG PEGS WITH
A MATING HEIGHT OF 8.13

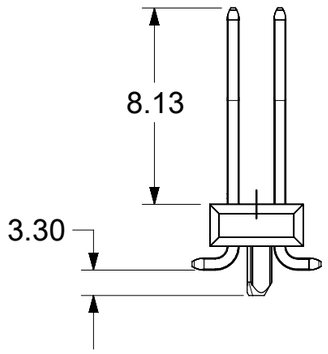

THIS DRAWING CONTAINS INFORMATION THAT IS PROPRIETARY TO MOLEX ELECTRONIC TECHNOLOGIES, LLC AND SHOULD NOT BE USED WITHOUT WRITTEN PERMISSION

DIMENSION UNITS	SCALE
mm	1:1

GENERAL TOLERANCES (UNLESS SPECIFIED)

ANGULAR TOL	±	°
4 PLACES	±	
3 PLACES	±	
2 PLACES	±	0.13
1 PLACE	±	0.25
0 PLACES	±	0.0

DRAFT WHERE APPLICABLE MUST REMAIN WITHIN DIMENSIONS

CURRENT REV DESC:

EC NO: 838183
DRWN: MEGHRB 2025/10/17
CHK'D: GANESY 2025/10/24
APPR: GANESY 2025/10/24

INITIAL REVISION:
DRWN: KSAMIEC 2017/09/07
APPR: FSMITH 2018/07/03

molex

CGRID HEADER ASSY VERTICAL DUAL ROW SMT

PRODUCT CUSTOMER DRAWING

DOCUMENT NUMBER	DOC TYPE	DOC PART	REVISION
713080000-SD	PSD	000	A12

THIRD ANGLE PROJECTION	DRAWING	SERIES	MATERIAL NUMBER	CUSTOMER	SHEET NUMBER
	A3-SIZE	71308	SEE TABLE		7 OF 10

DOCUMENT STATUS	P1	RELEASE DATE	2025/10/24 05:59:18

FORMAT: master-tb-prod-A3
REVISION: J1
DATE: 2021/05/01

PLATING:	124 - BRIGHT TIN	124 - BRIGHT TIN	206 - 0.76 SGOLD	206 - 0.76 SGOLD	118 - BRIGHT TIN	118 - BRIGHT TIN		
PACKAGING:	TUBE 713080001-PK	T&R 713080000-PK STYLE C	TUBE 713080001-PK	T&R 713080000-PK STYLE C	TUBE 713080001-PK	T&R 713080000-PK STYLE C		
PICK AND PLACE CAPS	NO	YES	NO	YES	NO	YES		
CKTS:	MATERIAL NO	MATERIAL NO	MATERIAL NO	MATERIAL NO	MATERIAL NO	MATERIAL NO	MATERIAL NO	MATERIAL NO
4			015-91-1048	015-91-6047				
6	71308-6106		015-91-1068	015-91-6067	71308-6706			
8			015-91-1088		71308-6708			
10	71308-6110		015-91-1108		71308-6710			
12			015-91-1128					
14			015-91-1148					
16			015-91-1168					
18			015-91-1188					
20			015-91-1208	015-91-6207				
22			015-91-1228					
24			015-91-1248					
26	71308-6126		015-91-1268		71308-6726			
28			015-91-1288					
30			015-91-1308					
32			015-91-1328					
34			015-91-1348					
36			015-91-1368					
38			015-91-1388					
40			015-91-1408					
42			015-91-1428					
44			015-91-1448					
46			015-91-1468					
48			015-91-1488					
50			015-91-1508	015-91-6507				
52			015-91-1528					
54			015-91-1548					
56			015-91-1568					
58			015-91-1588					
60			015-91-1608					
62			015-91-1628					
64			015-91-1648					
66			015-91-1668					
68			015-91-1688					
70			015-91-1708					
72			015-91-1728					
74			015-91-1748					
76			015-91-1768					
78			015-91-1788					
80			015-91-1808					
100			71308-6100					

PARTS ON THIS SHEET HAVE
SHORT PEGS WITH
A MATING HEIGHT OF 6.10

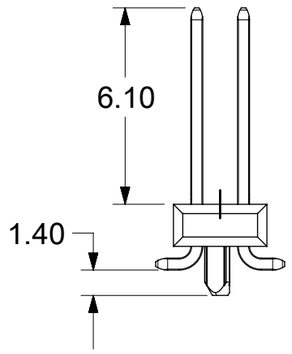

THIS DRAWING CONTAINS INFORMATION THAT IS PROPRIETARY TO MOLEX ELECTRONIC TECHNOLOGIES, LLC AND SHOULD NOT BE USED WITHOUT WRITTEN PERMISSION

DIMENSION UNITS	SCALE
mm	1:1

GENERAL TOLERANCES (UNLESS SPECIFIED)

ANGULAR TOL	± °
4 PLACES	±
3 PLACES	±
2 PLACES	± 0.13
1 PLACE	± 0.25
0 PLACES	± 0.0

DRAFT WHERE APPLICABLE MUST REMAIN WITHIN DIMENSIONS

CURRENT REV DESC:

EC NO: 838183
DRWN: MEGHRB 2025/10/17
CHK'D: GANESY 2025/10/24
APPR: GANESY 2025/10/24

INITIAL REVISION:
DRWN: KSAMIEC 2017/09/07
APPR: FSMITH 2018/07/03

THIRD ANGLE PROJECTION | DRAWING: A3-SIZE | SERIES: 71308

molex

CGRID HEADER ASSY VERTICAL DUAL ROW SMT

PRODUCT CUSTOMER DRAWING

DOCUMENT NUMBER	DOC TYPE	DOC PART	REVISION
713080000-SD	PSD	000	A12

MATERIAL NUMBER	CUSTOMER	SHEET NUMBER
SEE TABLE		8 OF 10

DOCUMENT STATUS	P1	RELEASE DATE	2025/10/24 05:59:18

FORMAT: master-tb-prod-A3
REVISION: J1
DATE: 2021/05/01

PLATING:	197 - REFLOW TIN	197 - REFLOW TIN	197 - REFLOW TIN				
PACKAGING:	T&R 713080000-PK STYLE D	TUBE 713080004-PK	TUBE 713080003-PK				
PICK AND PLACE CAPS	YES	YES	NO				
CKTS:	MATERIAL NO	MATERIAL NO	MATERIAL NO	MATERIAL NO	MATERIAL NO	MATERIAL NO	MATERIAL NO
4							
6							
8	71308-8409	71308-8408	71308-8508				
10							
12							
14							
16							
18							
20	71308-8421	71308-8420	71308-8520				
22							
24							
26	71308-8426						
28							
30							
32							
34							
36							
38							
40							
42							
44							
46							
48							
50							
52							
54							
56							
58							
60							
62							
64							
66							
68							
70							
72							
74							
76							
78							
80							

PARTS ON THIS SHEET HAVE
SHORT PEGS WITH
A MATING HEIGHT OF 8.13

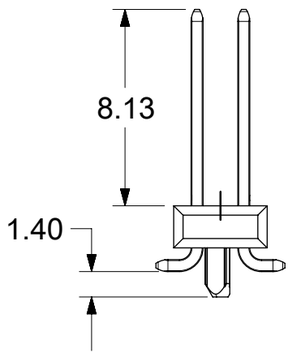

THIS DRAWING CONTAINS INFORMATION THAT IS PROPRIETARY TO MOLEX ELECTRONIC TECHNOLOGIES, LLC AND SHOULD NOT BE USED WITHOUT WRITTEN PERMISSION

DIMENSION UNITS	SCALE
mm	1:1

GENERAL TOLERANCES (UNLESS SPECIFIED)

ANGULAR TOL	±	°
4 PLACES	±	
3 PLACES	±	
2 PLACES	±	0.13
1 PLACE	±	0.25
0 PLACES	±	0.0

DRAFT WHERE APPLICABLE MUST REMAIN WITHIN DIMENSIONS

CURRENT REV DESC:

EC NO: 838183
DRWN: MEGHRB 2025/10/17
CHK'D: GANESY 2025/10/24
APPR: GANESY 2025/10/24

INITIAL REVISION:
DRWN: KSAMIEC 2017/09/07
APPR: FSMITH 2018/07/03

molex

CGRID HEADER ASSY VERTICAL DUAL ROW SMT

PRODUCT CUSTOMER DRAWING

THIRD ANGLE PROJECTION	DRAWING	SERIES
	A3-SIZE	71308

DOCUMENT NUMBER	DOC TYPE	DOC PART	REVISION
713080000-SD	PSD	000	A12

MATERIAL NUMBER	CUSTOMER	SHEET NUMBER
SEE TABLE		9 OF 10

DOCUMENT STATUS	P1	RELEASE DATE	2025/10/24 05:59:18

FORMAT: master-ib-prod-A3
REVISION: J1
DATE: 2021/05/01

MATERIAL NO	MADE FROM	NO OF CKTS	VOID LOCATION	PICK AND PLACE CAP	PACKAGING
	71308-0010	10	A5	711331000	713080002-PK
	71308-0110	10	A2	711331000	713080002-PK
	71308-0132	32	A9	711331000	713080002-PK
71308-9110	71308-0110	10	A5	711331000	713080002-PK
	71308-0140	14	B5	711331000	713080002-PK
71308-9310	71308-0110	10	B5	711331000	713080002-PK
71308-9311	71308-0110	10	B5	711331000	713080000-PK STYLE A
71308-9312	71308-1504	04	A1	711331000	713080000-PK STYLE A

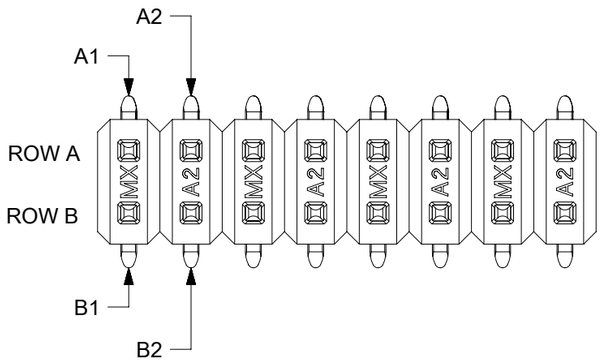

CIRCUIT IDENTIFICATION FOR VOIDED CKT ONLY

THIS DRAWING CONTAINS INFORMATION THAT IS PROPRIETARY TO MOLEX ELECTRONIC TECHNOLOGIES, LLC AND SHOULD NOT BE USED WITHOUT WRITTEN PERMISSION

DIMENSION UNITS	SCALE
mm	5:1

GENERAL TOLERANCES (UNLESS SPECIFIED)	
ANGULAR TOL ±	°
4 PLACES	±
3 PLACES	±
2 PLACES	± 0.13
1 PLACE	± 0.25
0 PLACES	± 0.0

DRAFT WHERE APPLICABLE MUST REMAIN WITHIN DIMENSIONS

CURRENT REV DESC:

EC NO: 838183
DRWN: MEGHRB 2025/10/17
CHK'D: GANESY 2025/10/24
APPR: GANESY 2025/10/24

INITIAL REVISION:
DRWN: KSAMIEC 2017/09/07
APPR: FSMITH 2018/07/03

molex

CGRID HEADER ASSY VERTICAL DUAL ROW SMT

PRODUCT CUSTOMER DRAWING

DOCUMENT NUMBER	DOC TYPE	DOC PART	REVISION
713080000-SD	PSD	000	A12

THIRD ANGLE PROJECTION	DRAWING	SERIES	MATERIAL NUMBER	CUSTOMER	SHEET NUMBER
	A3-SIZE	71308	SEE TABLE		10 OF 10

DOCUMENT STATUS	P1	RELEASE DATE	2025/10/24 05:59:18

FORMAT: master-tb-prod-A3
REVISION: J1
DATE: 2021/05/01