MX150 UL V0 RECEPTACLE 2X2 SEALED ASSEMBLY MAT SEAL
BOM AND PIN OUT SHEET

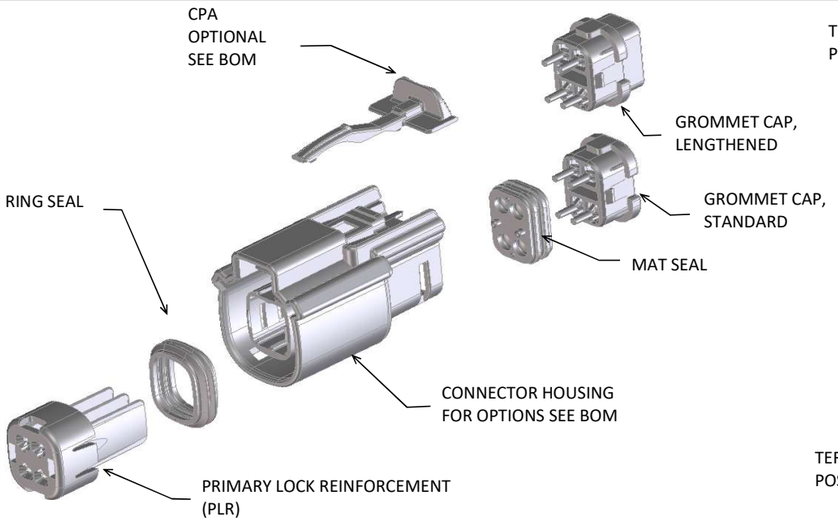

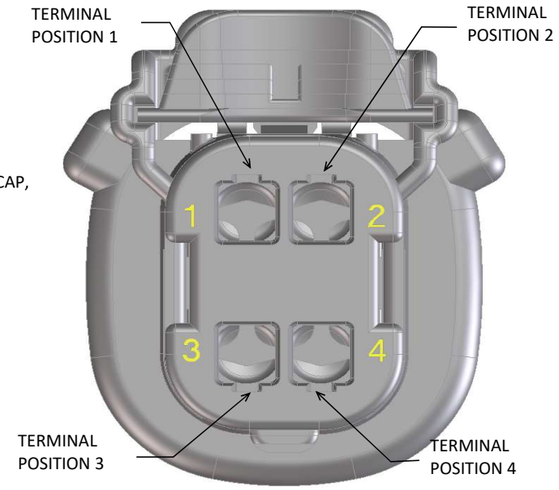

ABBREVIATION	DESCRIPTION	COLOR	MATERIAL
A-BLK-UL	HOUSING, KEYING OPTION A (UL V0)	BLACK	PA6 GF30 V0
B-LG-UL	HOUSING, KEYING OPTION B (UL V0)	LIGHT GRAY	PA6 GF30 V0
C-DG-UL	HOUSING, KEYING OPTION C (UL V0)	DARK GRAY	PA6 GF30 V0
D-SG-UL	HOUSING, KEYING OPTION D (UL V0)	STONE GRAY	PA6 GF30 V0
GCP	GROMMET CAP (STANDARD PLUGGED)	BLACK	SPS/NYLON GF20
GCO	GROMMET CAP (STANDARD OPEN)	BLACK	SPS/NYLON GF20
GCLP	GROMMET CAP (LENGTHENED PLUGGED)	BLACK	SPS/NYLON GF20
GCLO	GROMMET CAP (LENGTHENED OPEN)	BLACK	SPS/NYLON GF20
PLR-UL	PLR (UL V0)	ASH GRAY	PA6 GF30 V0
CPA	CPA	RED	PBT GF30
M	MAT SEAL	RUST RED	INHERENTLY LUBRICATED SILICONE
R	RING SEAL	GREEN	INHERENTLY LUBRICATED SILICONE

FOR ADDITIONAL INFORMATION SEE SD-33472-0001

ASSEMBLY DESCRIPTION	ASSEMBLY PART NUMBER	COMPONENT						BLOCKED TERMINALS											STATUS	COMMENTS	OPTIONAL ATTATCHMENTS SOLD SEPERATELY	
		THE PRESENCE OF AN ABBREVIATION INDICATES THE PRESENCE OF THAT COMPONENT.						CAVITY WITH A NUMBER INDICATES BLOCKED TERMINAL POSITION CAVITY WITHOUT A NUMBER INDICATES OPEN TERMINAL POSITION														
		HOUSING KEY/COLOR	GROMMET CAP	PLR	CPA	MAT SEAL	RING SEAL	1	2	3	4										BACKSHELL WITH RIBS	BACKSHELL WITHOUT RIBS
UL V0 KEY A, BLACK, W/O CPA	160074-2001	A-BLK-UL	GCLO	PLR-UL		M	R												SALEABLE			
UL V0 KEY B, LIGHT GRAY, W/O CPA	160074-2002	B-LG-UL	GCLO	PLR-UL		M	R												SALEABLE			
UL V0 KEY C, DARK GRAY, W/O CPA	160074-2003	C-DG-UL	GCLO	PLR-UL		M	R												SALEABLE			
UL V0 KEY D, STONE GRAY, W/O CPA	160074-2004	D-SG-UL	GCLO	PLR-UL		M	R												SALEABLE			
UL V0 KEY A, BLACK, W/CPA	160074-2006	A-BLK-UL	GCLO	PLR-UL	CPA	M	R												SALEABLE			
UL V0 KEY B, LIGHT GRAY, W/CPA	160074-2007	B-LG-UL	GCLO	PLR-UL	CPA	M	R												SALEABLE			
UL V0 KEY C, DARK GRAY, W/CPA	160074-2008	C-DG-UL	GCLO	PLR-UL	CPA	M	R												SALEABLE			
UL V0 KEY D, STONE GRAY, W/CPA	160074-2009	D-SG-UL	GCLO	PLR-UL	CPA	M	R												SALEABLE			

MX150 UL V0 RECEPTACLE 2X4 SEALED ASSEMBLY MAT SEAL
BOM AND PIN OUT SHEET

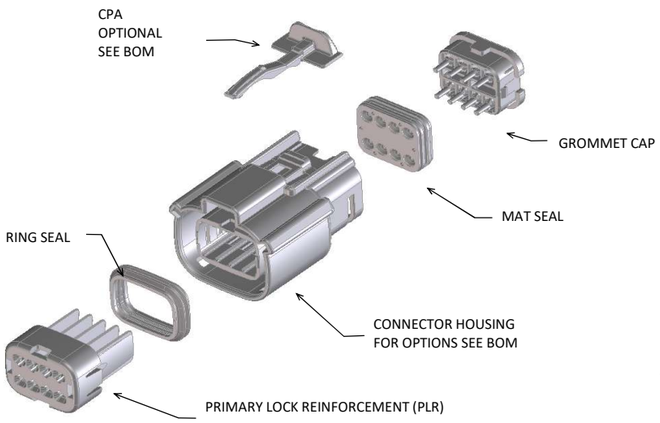

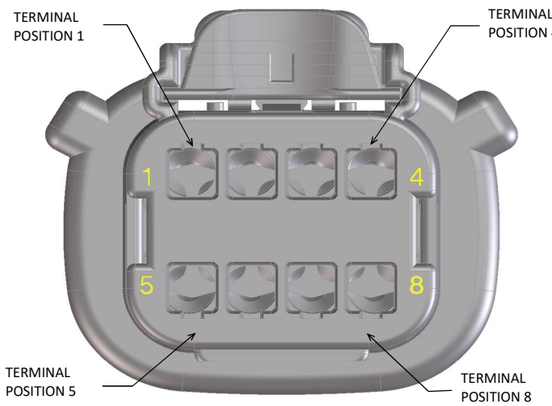

ABBREVIATION	DESCRIPTION	COLOR	MATERIAL
A-BLK-UL	HOUSING, KEYING OPTION A (UL V0)	BLACK	PA6 GF30 V0
B-LG-UL	HOUSING, KEYING OPTION B (UL V0)	LIGHT GRAY	PA6 GF30 V0
C-DG-UL	HOUSING, KEYING OPTION C (UL V0)	DARK GRAY	PA6 GF30 V0
D-SG-UL	HOUSING, KEYING OPTION D (UL V0)	STONE GRAY	PA6 GF30 V0
A-BLK-UL-CLIP	HOUSING, KEYING OPTION A (UL V0) WITH CLIP SLOT	BLACK	PA6 GF30 V0
B-LG-UL-CLIP	HOUSING, KEYING OPTION B (UL V0) WITH CLIP SLOT	LIGHT GRAY	PA6 GF30 V0
C-DG-UL-CLIP	HOUSING, KEYING OPTION C (UL V0) WITH CLIP SLOT	DARK GRAY	PA6 GF30 V0
D-SG-UL-CLIP	HOUSING, KEYING OPTION D (UL V0) WITH CLIP SLOT	STONE GRAY	PA6 GF30 V0
GCP	GROMMET CAP (PLUGGED)	BLACK	SPS/NYLON GF20
GCO	GROMMET CAP (OPEN)	BLACK	SPS/NYLON GF20
PLR-UL	PLR (UL V0)	ASH GRAY	PA6 GF30 V0
CPA	CPA	RED	PBT GF30
M	MAT SEAL	LIGHT BLUE	INHERENTLY LUBRICATED SILICONE
R	RING SEAL	RUST RED	INHERENTLY LUBRICATED SILICONE

FOR ADDITIONAL INFORMATION SEE SD-33472-0001

ASSEMBLY DESCRIPTION	ASSEMBLY PART NUMBER	COMPONENT						BLOCKED TERMINALS											STATUS	COMMENTS	OPTIONAL ATTATCHMENTS SOLD SEPERATELY			
		THE PRESENCE OF AN ABBREVIATION INDICATES THE PRESENCE OF THAT COMPONENT.						CAVITY WITH A NUMBER INDICATES BLOCKED TERMINAL POSITION CAVITY WITHOUT A NUMBER INDICATES OPEN TERMINAL POSITION																
		HOUSING KEY/COLOR	GROMMET CAP	PLR	CPA	MAT SEAL	RING SEAL	1	2	3	4	5	6	7	8						BACKSHELL WITH RIBS	BACKSHELL WITHOUT RIBS	90˚ ADAPTOR WITH RIBS	90˚ ADAPTOR WITHOUT RIBS
UL V0 KEY A, BLACK, W/O CPA	160074-4001	A-BLK-UL	GCO	PLR-UL		M	R												SALEABLE		N/A	N/A	N/A	N/A
UL V0 KEY B, LIGHT GRAY, W/O CPA	160074-4002	B-LG-UL	GCO	PLR-UL		M	R												SALEABLE		N/A	N/A	N/A	N/A
UL V0 KEY C, DARK GRAY, W/O CPA	160074-4003	C-DG-UL	GCO	PLR-UL		M	R												SALEABLE		N/A	N/A	N/A	N/A
UL V0 KEY D, STONE GRAY, W/O CPA	160074-4004	D-SG-UL	GCO	PLR-UL		M	R												SALEABLE		N/A	N/A	N/A	N/A
UL V0 KEY A, BLACK, W/CPA	160074-4006	A-BLK-UL	GCO	PLR-UL	CPA	M	R												SALEABLE		N/A	N/A	N/A	N/A
UL V0 KEY B, LIGHT GRAY, W/CPA	160074-4007	B-LG-UL	GCO	PLR-UL	CPA	M	R												SALEABLE		N/A	N/A	N/A	N/A
UL V0 KEY C, DARK GRAY, W/CPA	160074-4008	C-DG-UL	GCO	PLR-UL	CPA	M	R												SALEABLE		N/A	N/A	N/A	N/A
UL V0 KEY D, STONE GRAY, W/CPA	160074-4009	D-SG-UL	GCO	PLR-UL	CPA	M	R												SALEABLE		N/A	N/A	N/A	N/A
UL V0 KEY A, BLACK, WITH CLIPSLOT, W/O CPA	160074-4011	A-BLK-UL-CLIP	GCO	PLR-UL		M	R												SALEABLE		34951-0811	34951-0821	34951-0831	34951-0841
UL V0 KEY B, LIGHT GRAY, WITH CLIPSLOT, W/O CPA	160074-4012	B-LG-UL-CLIP	GCO	PLR-UL		M	R												SALEABLE		34951-0811	34951-0821	34951-0831	34951-0841
UL V0 KEY C, DARK GRAY, WITH CLIPSLOT, W/O CPA	160074-4013	C-DG-UL-CLIP	GCO	PLR-UL		M	R												SALEABLE		34951-0811	34951-0821	34951-0831	34951-0841
UL V0 KEY D, STONE GRAY, WITH CLIPSLOT, W/O CPA	160074-4014	D-SG-UL-CLIP	GCO	PLR-UL		M	R												SALEABLE		34951-0811	34951-0821	34951-0831	34951-0841
UL V0 KEY A, BLACK, WITH CLIPSLOT, W/CPA	160074-4016	A-BLK-UL-CLIP	GCO	PLR-UL	CPA	M	R												SALEABLE		34951-0811	34951-0821	34951-0831	34951-0841
UL V0 KEY B, LIGHT GRAY, WITH CLIPSLOT, W/CPA	160074-4017	B-LG-UL-CLIP	GCO	PLR-UL	CPA	M	R												SALEABLE		34951-0811	34951-0821	34951-0831	34951-0841
UL V0 KEY C, DARK GRAY, WITH CLIPSLOT, W/CPA	160074-4018	C-DG-UL-CLIP	GCO	PLR-UL	CPA	M	R												SALEABLE		34951-0811	34951-0821	34951-0831	34951-0841
UL V0 KEY D, STONE GRAY, WITH CLIPSLOT, W/CPA	160074-4019	D-SG-UL-CLIP	GCO	PLR-UL	CPA	M	R												SALEABLE		34951-0811	34951-0821	34951-0831	34951-0841

molex

MX150 UL V0 RECEPTACLE 2X6 SEALED ASSEMBLY MAT SEAL
BOM AND PIN OUT SHEET

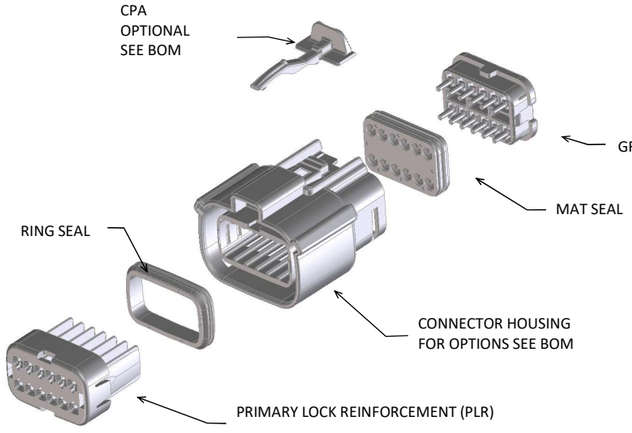

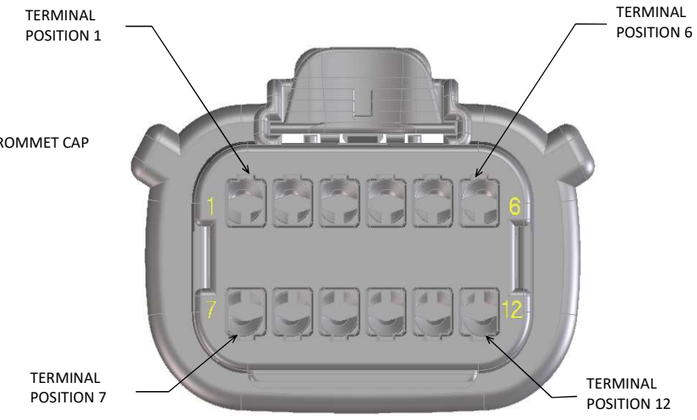

ABBREVIATION	DESCRIPTION	COLOR	MATERIAL
A-BLK-UL	HOUSING, KEYING OPTION A (UL V0)	BLACK	PA6 GF30 V0
B-LG-UL	HOUSING, KEYING OPTION B (UL V0)	LIGHT GRAY	PA6 GF30 V0
C-DG-UL	HOUSING, KEYING OPTION C (UL V0)	DARK GRAY	PA6 GF30 V0
D-SG-UL	HOUSING, KEYING OPTION D (UL V0)	STONE GRAY	PA6 GF30 V0
D-BLK-UL	HOUSING, KEYING OPTION D (UL V0)	BLACK	PA6 GF30 V0
GC	GROMMET CAP (PLUGGED)	BLACK	SPS/NYLON GF20
PLR-UL	PLR (UL V0)	ASH GRAY	PA6 GF30 V0
CPA	CPA	RED	PBT GF30
M	MAT SEAL	LIGHT BLUE	INHERENTLY LUBRICATED SILICONE
R	RING SEAL	GREEN	INHERENTLY LUBRICATED SILICONE

FOR ADDITIONAL INFORMATION SEE SD-33472-0001

ASSEMBLY DESCRIPTION	ASSEMBLY PART NUMBER	COMPONENT						BLOCKED TERMINALS												STATUS	COMMENTS	OPTIONAL ATTATCHMENTS SOLD SEPERATELY	
		THE PRESENCE OF AN ABBREVIATION INDICATES THE PRESENCE OF THAT COMPONENT.						CAVITY WITH A NUMBER INDICATES BLOCKED TERMINAL POSITION CAVITY WITHOUT A NUMBER INDICATES OPEN TERMINAL POSITION														BACKSHELL WITH RIBS	BACKSHELL WITHOUT RIBS
		HOUSING KEY/COLOR	GROMMET CAP	PLR	CPA	MAT SEAL	RING SEAL	1	2	3	4	5	6	7	8	9	10	11	12				
UL V0 KEY A, BLACK, W/O CPA	160074-6001	A-BLK-UL	GC	PLR-UL		M	R													SALEABLE		34951-1210	34951-1220
UL V0 KEY B, LIGHT GRAY, W/O CPA	160074-6002	B-LG-UL	GC	PLR-UL		M	R													SALEABLE		34951-1210	34951-1220
UL V0 KEY C, DARK GRAY, W/O CPA	160074-6003	C-DG-UL	GC	PLR-UL		M	R													SALEABLE		34951-1210	34951-1220
UL V0 KEY D, STONE GRAY, W/O CPA	160074-6004	D-SG-UL	GC	PLR-UL		M	R													SALEABLE		34951-1210	34951-1220
UL V0 KEY A, BLACK, W/CPA	160074-6006	A-BLK-UL	GC	PLR-UL	CPA	M	R													SALEABLE		34951-1210	34951-1220
UL V0 KEY B, LIGHT GRAY, W/CPA	160074-6007	B-LG-UL	GC	PLR-UL	CPA	M	R													SALEABLE		34951-1210	34951-1220
UL V0 KEY C, DARK GRAY, W/CPA	160074-6008	C-DG-UL	GC	PLR-UL	CPA	M	R													SALEABLE		34951-1210	34951-1220
UL V0 KEY D, STONE GRAY, W/CPA	160074-6009	D-SG-UL	GC	PLR-UL	CPA	M	R													SALEABLE		34951-1220	34951-1220
UL V0 KEY D, BLACK, W/CPA	160074-6010	D-BLK-UL	GC	PLR-UL	CPA	M	R													SALEABLE		34951-1210	34951-1220

molex

MX150 UL V0 RECEPTACLE 2X8 SEALED ASSEMBLY MAT SEAL
BOM AND PIN OUT SHEET

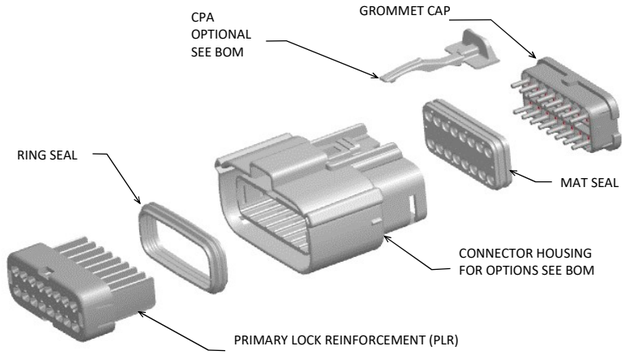

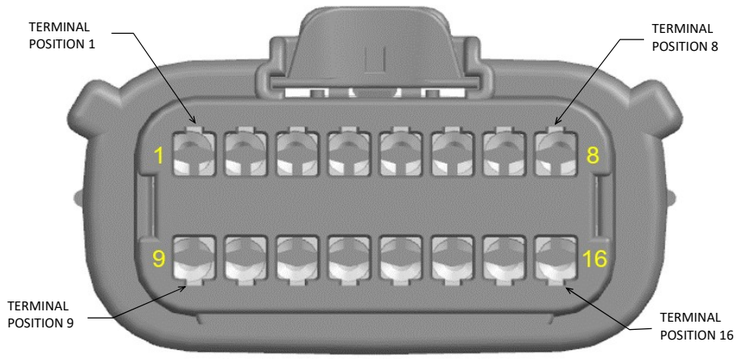

ABBREVIATION	DESCRIPTION	COLOR	MATERIAL
A-BLK-UL	HOUSING, KEYING OPTION A(UL V0)	BLACK	PA6 GF30 V0
B-LG-UL	HOUSING, KEYING OPTION B(UL V0)	LIGHT GRAY	PA6 GF30 V0
C-BR-UL	HOUSING, KEYING OPTION C(UL V0)	DARK GRAY	PA6 GF30 V0
D-GR-UL	HOUSING, KEYING OPTION D(UL V0)	STONE GRAY	PA6 GF30 V0
GC	GROMMET CAP	BLACK	SPS/NYLON GF20
PLR	PLR(UL V0)	ASH GRAY	PA6 GF30 V0
CPA	CPA	RED	PBT GF30
M	MAT SEAL	LIGHT BLUE	INHERENTLY LUBRICATED SILICONE
R	RING SEAL	GREEN	INHERENTLY LUBRICATED SILICONE

FOR ADDITIONAL INFORMATION SEE SD-33472-0001

ASSEMBLY DESCRIPTION	ASSEMBLY PART NUMBER	COMPONENT						BLOCKED TERMINALS																STATUS	COMMENTS	OPTIONAL ATTATCHMENTS SOLD SEPERATELY			
		THE PRESENCE OF AN ABBREVIATION INDICATES THE PRESENCE OF THAT COMPONENT.						CAVITY WITH A NUMBER INDICATES BLOCKED TERMINAL POSITION CAVITY WITHOUT A NUMBER INDICATES OPEN TERMINAL POSITION																					
		HOUSING KEY/COLOR	GROMMET CAP	PLR	CPA	MAT SEAL	RING SEAL	1	2	3	4	5	6	7	8	9	10	11	12	13	14	15	16			BACKSHELL WITH RIBS	BACKSHELL WITHOUT RIBS	90˚ ADAPTOR WITH RIBS	90˚ ADAPTOR WITHOUT RIBS
UL V0 KEY A, BLACK, W/O CPA	160074-8001	A-BLK-UL	GC	PLR-UL		M	R																	OK TO TOOL		N/A	N/A	N/A	N/A
UL V0 KEY B, LIGHT GRAY, W/O CPA	160074-8002	B-LG-UL	GC	PLR-UL		M	R																	OK TO TOOL		N/A	N/A	N/A	N/A
UL V0 KEY C, DARK GRAY, W/O CPA	160074-8003	C-DG-UL	GC	PLR-UL		M	R																	OK TO TOOL		N/A	N/A	N/A	N/A
UL V0 KEY D, STONE GRAY, W/O CPA	160074-8004	D-SG-UL	GC	PLR-UL		M	R																	OK TO TOOL		N/A	N/A	N/A	N/A
UL V0 KEY A, BLACK, W/ CPA	160074-8005	A-BLK-UL	GC	PLR-UL	CPA	M	R																	OK TO TOOL		N/A	N/A	N/A	N/A
UL V0 KEY B, LIGHT GRAY, W/ CPA	160074-8006	B-LG-UL	GC	PLR-UL	CPA	M	R																	OK TO TOOL		N/A	N/A	N/A	N/A
UL V0 KEY C, DARK GRAY, W/ CPA	160074-8007	C-DG-UL	GC	PLR-UL	CPA	M	R																	OK TO TOOL		N/A	N/A	N/A	N/A
UL V0 KEY D, STONE GRAY, W/ CPA	160074-8008	D-SG-UL	GC	PLR-UL	CPA	M	R																	OK TO TOOL		N/A	N/A	N/A	N/A

molex

MX150 UL V0 RECEPTACLE 2X10 SEALED ASSEMBLY MAT SEAL
BOM AND PIN OUT SHEET

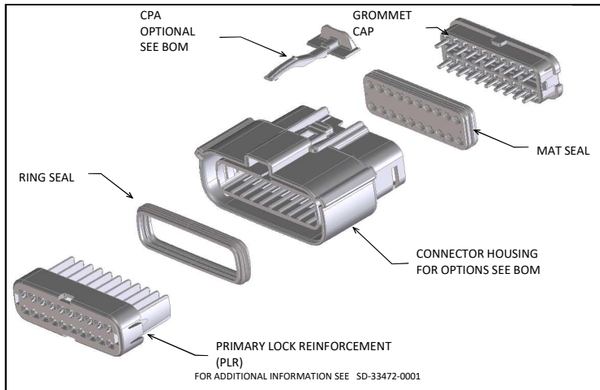

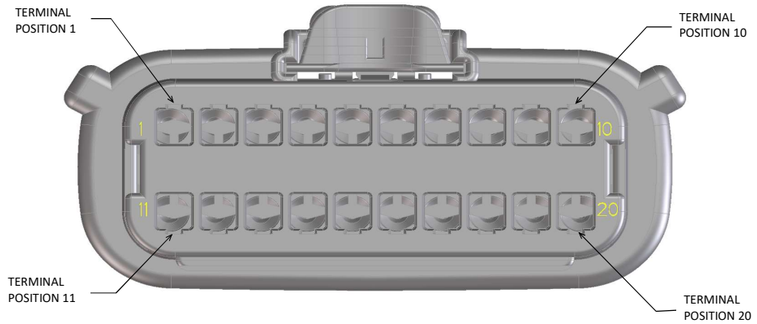

ABBREVIATION	DESCRIPTION	COLOR	MATERIAL
A-BLK-UL	HOUSING, KEYING OPTION A (UL V0)	BLACK	PA6 GF30 V0
B-LG-UL	HOUSING, KEYING OPTION B (UL V0)	LIGHT GRAY	PA6 GF30 V0
C-DG-UL	HOUSING, KEYING OPTION C (UL V0)	DARK GRAY	PA6 GF30 V0
D-SG-UL	HOUSING, KEYING OPTION D (UL V0)	STONE GRAY	PA6 GF30 V0
GC	GROMMET CAP	BLACK	SPS/NYLON GF20
PLR-UL	PLR (UL V0)	ASH GRAY	PA6 GF30 V0
CPA	CPA	RED	PBT GF30
M	MAT SEAL	LIGHT BLUE	INHERENTLY LUBRICATED SILICONE
R	RING SEAL	GREEN	INHERENTLY LUBRICATED SILICONE

ASSEMBLY DESCRIPTION	ASSEMBLY PART NUMBER	COMPONENT						BLOCKED TERMINALS																				STATUS	COMMENTS	OPTIONAL ATTATCHMENTS SOLD SEPERATELY			
		THE PRESENCE OF AN ABBREVIATION INDICATES THE PRESENCE OF THAT COMPONENT.						CAVITY WITH A NUMBER INDICATES BLOCKED TERMINAL POSITION CAVITY WITHOUT A NUMBER INDICATES OPEN TERMINAL POSITION																									
		HOUSING KEY/COLOR	GROMMET CAP	PLR	CPA	MAT SEAL	RING SEAL	1	2	3	4	5	6	7	8	9	10	11	12	13	14	15	16	17	18	19	20			BACKSHELL WITH RIBS	BACKSHELL WITHOUT RIBS	90° ADAPTOR WITH RIBS	90° ADAPTOR WITHOUT RIBS
UL V0 KEY A, BLACK, W/O CPA	160074-0001	A-BLK-UL	GC	PLR-UL		M	R																					SALEABLE		N/A	N/A	N/A	N/A
UL V0 KEY B, LIGHT GRAY, W/O CPA	160074-0002	B-LG-UL	GC	PLR-UL		M	R																					SALEABLE		N/A	N/A	N/A	N/A
UL V0 KEY C, DARK GRAY, W/O CPA	160074-0003	C-DG-UL	GC	PLR-UL		M	R																					SALEABLE		N/A	N/A	N/A	N/A
UL V0 KEY D, STONE GRAY, W/O CPA	160074-0004	D-SG-UL	GC	PLR-UL		M	R																					SALEABLE		N/A	N/A	N/A	N/A
UL V0 KEY A, BLACK, W/CPA	160074-0006	A-BLK-UL	GC	PLR-UL	CPA	M	R																					SALEABLE		N/A	N/A	N/A	N/A
UL V0 KEY B, LIGHT GRAY, W/CPA	160074-0007	B-LG-UL	GC	PLR-UL	CPA	M	R																					SALEABLE		N/A	N/A	N/A	N/A
UL V0 KEY C, DARK GRAY, W/CPA	160074-0008	C-DG-UL	GC	PLR-UL	CPA	M	R																					SALEABLE		N/A	N/A	N/A	N/A
UL V0 KEY D, STONE GRAY, W/CPA	160074-0009	D-SG-UL	GC	PLR-UL	CPA	M	R																					SALEABLE		N/A	N/A	N/A	N/A