

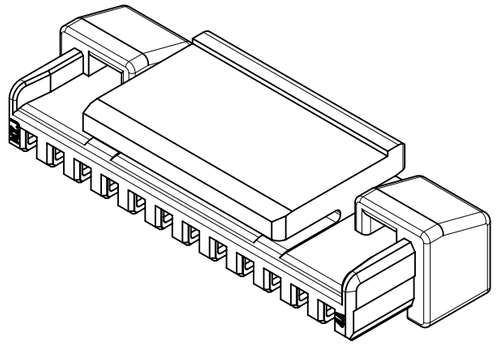

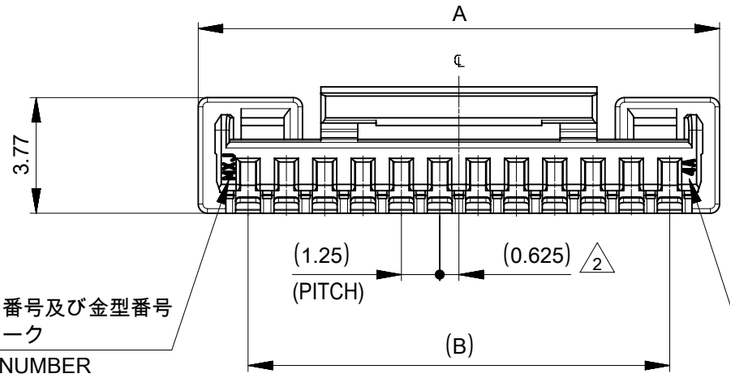

奇数キャビティ：キャビティ番号及び金型番号
偶数キャビティ：トレードマーク
ODD CAV:CAVITY & MOLD NUMBER
EVEN CAV:TRADE MARK

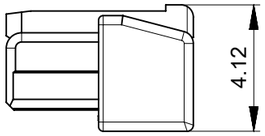

奇数キャビティ：トレードマーク
偶数キャビティ：キャビティ番号及び金型番号
ODD CAV:TRADE MARK
EVEN CAV:CAVITY & MOLD NUMBER

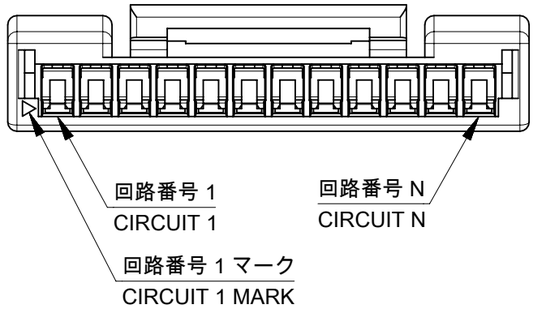

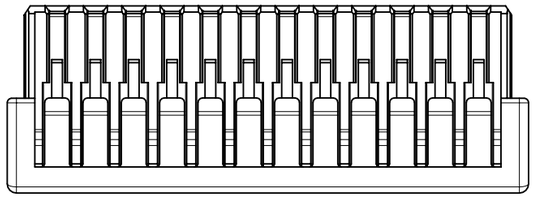

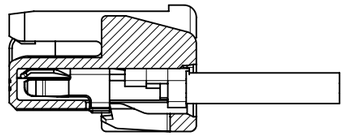

ターミナル装着図
TERMINAL ASSEMBLY DRAWING

注記：
NOTES :

1. 材質：TABLE 1参照
   MATERIAL : SEE TABLE 1.
2. 偶数極に適用。
   APPLY FOR EVEN CIRCUIT.
3. 製品仕様書、コネクタ取扱説明書、適合嵌合相手、適合ターミナルはSHEET 3をご参照ください。
   PLEASE REFER TO SHEET 3 FOR PRODUCT SPECIFICATION, APPLICATION SPECIFICATION, MATE WITH AND APPLICABLE TERMINAL.
4. 発注番号：SHEET 3 参照
   ORDER NUMBER : PLEASE REFER TO SHEET 3

505565**0*

極数
CIRCUIT SIZE

番号 NO.	ハウジングカラー HOUSING COLOR
0	ナチュラル (白) NATURAL (WHITE)
1	黒 BLACK
2	赤 RED
3	黄 YELLOW
4	青 BLUE
6	緑 GREEN
8	橙 ORANGE

1 TABLE 1

部品 PART	材質 MATERIAL
ハウジング HOUSING	ポリエステル(PBT), UL94 V-0, 色：SHEET 3参照 POLYESTER(PBT), UL94 V-0, COLOR : SEE SHEET 3.

DOCUMENT STATUS	P1	RELEASE DATE	2025/02/25 06:03:52

18.75	22	16
17.50	20.75	15
16.25	19.5	14
15	18.25	13
13.75	17	12
12.5	15.75	11
11.25	14.5	10
10	13.25	9
8.75	12	8
7.5	10.75	7
6.25	9.5	6
5	8.25	5
3.75	7	4
2.5	5.75	3
1.25	4.5	2
B	A	極数 CIRCUIT SIZE

THIS DRAWING CONTAINS INFORMATION THAT IS PROPRIETARY TO MOLEX ELECTRONIC TECHNOLOGIES, LLC AND SHOULD NOT BE USED WITHOUT WRITTEN PERMISSION

DIMENSION UNITS	SCALE
mm	NTS

GENERAL TOLERANCES (UNLESS SPECIFIED)

ANGULAR TOL	±	3.0 °
4 PLACES	±	0.2
3 PLACES	±	0.2
2 PLACES	±	0.2
1 PLACE	±	0.2
0 PLACES	±	0.2

DRAFT WHERE APPLICABLE MUST REMAIN WITHIN DIMENSIONS

CURRENT REV DESC: REMOVED OBSOLETED PART NUMBERS AS PER PCN#515932.

EC NO:	812554	
DRWN:	RAVINR1	2025/01/27
CHK'D:	GGA	2025/02/25
APPR:	GGA	2025/02/25
INITIAL REVISION:		
DRWN:	RWATANABE01	2017/09/14
APPR:	TKANEKO	2017/09/26

THIRD ANGLE PROJECTION | DRAWING: A3-SIZE | SERIES: 505565

molex

MICRO-LOCK PLUS 1.25 W/B
SINGLE ROW RECEPTACLE HOUSING

PRODUCT CUSTOMER DRAWING

DOCUMENT NUMBER	DOC TYPE	DOC PART	REVISION
5055650002-SD	PSD	000	H1

MATERIAL NUMBER	CUSTOMER	SHEET NUMBER
SEE TABLE	GENERAL	1 OF 3

FORMAT: master-tb-prod-A3
REVISION: J1
DATE: 2021/05/01

製品形状
PRODUCT SHAPE

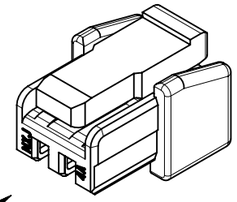

VIEW Z

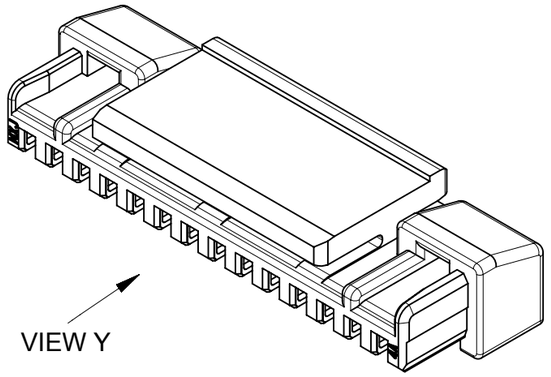

VIEW Y

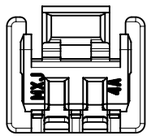

VIEW Z

2-13極
2-13 CIRCUIT

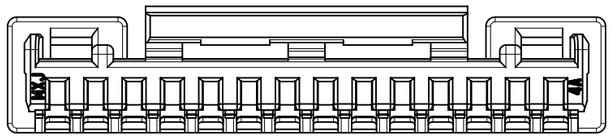

VIEW Y

14-16極
14-16 CIRCUIT

THIS DRAWING CONTAINS INFORMATION THAT IS PROPRIETARY TO MOLEX ELECTRONIC TECHNOLOGIES, LLC AND SHOULD NOT BE USED WITHOUT WRITTEN PERMISSION

DIMENSION UNITS	SCALE
mm	NTS

GENERAL TOLERANCES (UNLESS SPECIFIED)		
ANGULAR TOL	±	3.0 °
4 PLACES	±	0.2
3 PLACES	±	0.2
2 PLACES	±	0.2
1 PLACE	±	0.2
0 PLACES	±	0.2

DRAFT WHERE APPLICABLE MUST REMAIN WITHIN DIMENSIONS

CURRENT REV DESC: REMOVED OBSOLETED PART NUMBERS AS PER PCN#515932.

EC NO:	812554	
DRWN:	RAVINR1	2025/01/27
CHK'D:	GGA	2025/02/25
APPR:	GGA	2025/02/25
INITIAL REVISION:		
DRWN:	RWATANABE01	2017/09/14
APPR:	TKANEKO	2017/09/26

THIRD ANGLE PROJECTION | DRAWING: A3-SIZE | SERIES: 505565

molex

MICRO-LOCK PLUS 1.25 W/B
SINGLE ROW RECEPTACLE HOUSING

PRODUCT CUSTOMER DRAWING

DOCUMENT NUMBER	DOC TYPE	DOC PART	REVISION
5055650002-SD	PSD	000	H1

MATERIAL NUMBER	CUSTOMER	SHEET NUMBER
SEE TABLE	GENERAL	2 OF 3

DOCUMENT STATUS	P1	RELEASE DATE	2025/02/25 06:03:52

FORMAT: master-lb-prod-A3
REVISION: J1
DATE: 2021/05/01

△3 適合製品及び各種仕様書 APPLICABLE PRODUCTS AND VARIOUS SPECIFICATIONS

梱包仕様書 PACKAGING SPECIFICATION	PART NUMBER	SPECIFICATION NUMBER
	505565**0*	5055659200 PS 200

適合ターミナル APPLICABLE TERMINAL	PART NUMBER	PLATING TYPE	WIRE SIZE(AWG)
	5054311000	TIN	#26-30
	5054311*00 1,2,3	GOLD	

適合嵌合相手 MATE WITH	WIRE TO BOARD				WIRE TO WIRE
	TIN PLATING		GOLD PLATING		TIN PLATING
	VERTICAL	RIGHT ANGLE	VERTICAL	RIGHT ANGLE	---
	2-16CKT				2-9CKT
シリーズ番号 SERIES NUMBER	505568**7*	505567**7*	505568**** 3,5,8	505567**** 3,5,8	2145252***
製品仕様書 PRODUCT SPECIFICATION	5055650000 PS 000		5055650002 PS 000		5055650003-PS PS 000
コネクタ取扱説明書 APPLICATION SPECIFICATION	5055650000-AS PS 000				

製品嵌合図は各嵌合相手図面を参照のこと
MATING VIEW : REFER TO EACH "MATE WITH" PART DRAWING.

△4 505565**0* 発注番号一覧 ORDER NUMBER LIST

ORANGE	GREEN	BLUE	YELLOW	RED	BLACK	NATURAL (WHITE)	HOUSING COLOR
------	------	5055651604	------	5055651602	5055651601	5055651600	16
------	------	5055651504	------	5055651502	5055651501	5055651500	15
------	------	5055651404	------	5055651402	5055651401	5055651400	14
------	------	5055651304	------	5055651302	5055651301	5055651300	13
------	------	5055651204	------	5055651202	5055651201	5055651200	12
------	------	5055651104	------	5055651102	5055651101	5055651100	11
------	------	5055651004	------	5055651002	5055651001	5055651000	10
------	5055650906	5055650904	------	5055650902	5055650901	5055650900	9
------	------	5055650804	5055650803	5055650802	5055650801	5055650800	8
------	------	5055650704	------	5055650702	5055650701	5055650700	7
------	------	5055650604	------	5055650602	5055650601	5055650600	6
------	------	5055650504	------	5055650502	5055650501	5055650500	5
5055650408	5055650406	5055650404	5055650403	5055650402	5055650401	5055650400	4
------	------	5055650304	------	5055650302	5055650301	5055650300	3
5055650208	5055650206	5055650204	5055650203	5055650202	5055650201	5055650200	2
発注番号　ORDER NUMBER							極数 CIRCUIT SIZE
梱包形態：ポリ袋 PACKAGING : POLYBAG PACKAGE							

THIS DRAWING CONTAINS INFORMATION THAT IS PROPRIETARY TO MOLEX ELECTRONIC TECHNOLOGIES, LLC AND SHOULD NOT BE USED WITHOUT WRITTEN PERMISSION

DIMENSION UNITS	mm
SCALE	NTS
GENERAL TOLERANCES (UNLESS SPECIFIED)	
ANGULAR TOL	± 3.0 °
4 PLACES	± 0.2
3 PLACES	± 0.2
2 PLACES	± 0.2
1 PLACE	± 0.2
0 PLACES	± 0.2
DRAFT WHERE APPLICABLE MUST REMAIN WITHIN DIMENSIONS	

CURRENT REV DESC: REMOVED OBSOLETED PART NUMBERS AS PER PCN#515932.

EC NO: 812554
DRWN: RAVINR1 2025/01/27
CHK'D: GGA 2025/02/25
APPR: GGA 2025/02/25

INITIAL REVISION:
DRWN: RWATANABE01 2017/09/14
APPR: TKANEKO 2017/09/26

molex

MICRO-LOCK PLUS 1.25 W/B
SINGLE ROW RECEPTACLE HOUSING

PRODUCT CUSTOMER DRAWING

DOCUMENT NUMBER	DOC TYPE	DOC PART	REVISION
5055650002-SD	PSD	000	H1

THIRD ANGLE PROJECTION	DRAWING	SERIES	MATERIAL NUMBER	CUSTOMER	SHEET NUMBER
	A3-SIZE	505565	SEE TABLE	GENERAL	3 OF 3

DOCUMENT STATUS	P1	RELEASE DATE	2025/02/25 06:03:52

FORMAT: master-ib-prod-A3
REVISION: J1
DATE: 2021/05/01