NOTES:
1. MATERIALS:
   HOUSING:
   "BLANK"=NYLON 6/6, UNFILLED UL94 V-2, COLOR: NATURAL
   "210"=NYLON 6/6, UNFILLED UL94 V-0, COLOR: NATURAL
   "BL"=NYLON 6/6, UNFILLED UL94 V-2, COLOR: BLACK
   "400"=NYLON 6/6, UNFILLED UL94 V-0, COLOR: BLACK
   TERMINALS:
   BRASS
2. TERMINAL PLATING:
   "BLANK"=.000035/(0.00090) MIN. REFLOWED MATTE TIN OVER
   .000020/(0.00050) MIN. COPPER (PREPLATE)
   (FINISH IS BRIGHT IN APPEARANCE, THICKNESS AS
   APPLIED PRIOR TO REFLOW)
   GS2=.000015/(0.00038) MIN. SELECT GOLD AND
   .000100/(0.00254) MIN. SELECT MATTE TIN
   OVER .000050/(0.00127) MIN. NICKEL OVERALL
   GS=.000030/(0.00076) MIN. SELECT GOLD AND
   .000100/(0.00254) MIN. SELECT MATTE TIN
   OVER .000050/(0.00127) MIN. NICKEL OVERALL
   S=.000100/(0.00254) MIN. BRIGHT TIN OVER
   .000050/(0.00127) MIN. NICKEL
   MS=.000100/(0.00254) MIN. MATTE TIN OVER
   .000050/(0.00127) MIN. NICKEL
3. PRODUCT SPECIFICATION: PS-5556-001
4. PACKAGING: TRAY PACKED PER PK-5566-002
5. PART MATES WITH MINI-FIT JR. RECEPTACLE NO. 5557
   46994, MINI FIT SIGMA/TPA2 NO.200453.
6. PART IS NOT DESIGNED FOR CURRENT SHARING.
7. PARTS ARE NOT TO BE MATED OR UN-MATED WHILE
   CIRCUITS ARE LIVE.
8. PART CONFORMS TO CLASS "B" REQUIREMENTS OF
   COSMETIC SPECIFICATION PS-45499-002.
9. 5 CIRCUIT PARTS HAVE PEG DESIGN B. ALL OTHER CIRCUIT
   SIZES HAVE PEG DESIGN A.
10. TEXT SHOWN IS FOR REFERENCE ONLY. TEXT AND
    TEXT LOCATION MAY VARY DEPENDING ON
    PART NUMBER AND/OR TOOL

CKT SIZE	DIM A	DIM B
2	.378 (9.60)	.165 (4.20)
4	.709 (18.00)	.496 (12.60)
5	.874 (22.20)	.661 (16.80)
6	1.039 (26.40)	.827 (21.00)
7	1.205 (30.60)	.992 (25.20)
8	1.370 (34.80)	1.157 (29.40)
9	1.535 (39.00)	1.323 (33.60)
10	1.701 (43.20)	1.488 (37.80)
11	1.866 (47.40)	1.654 (42.00)
12	2.031 (51.60)	1.819 (46.20)

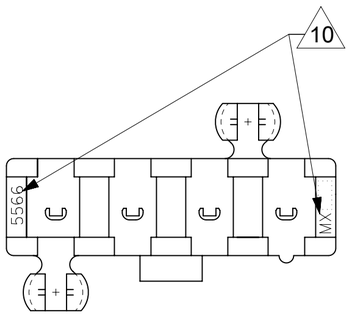

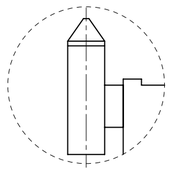
PEG DESIGN B
SEE NOTE 9

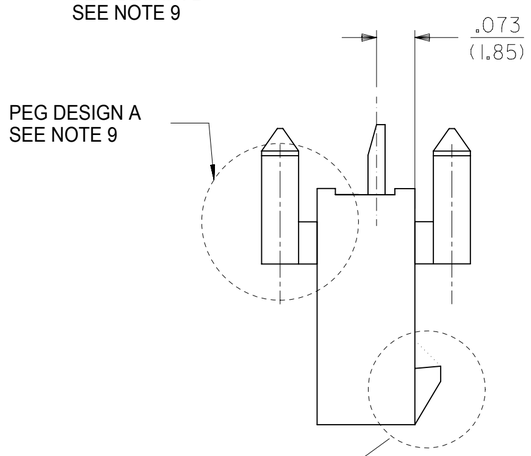

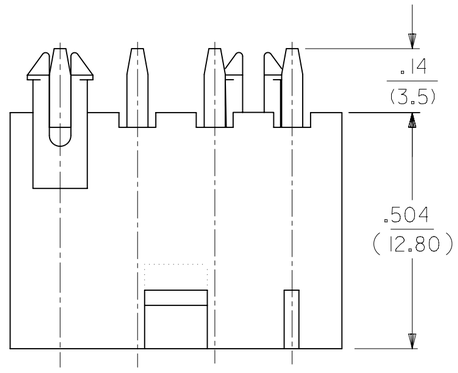

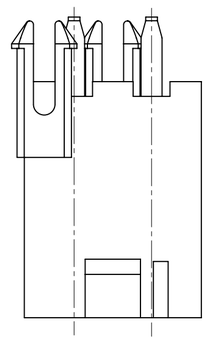
2 CIRCUIT

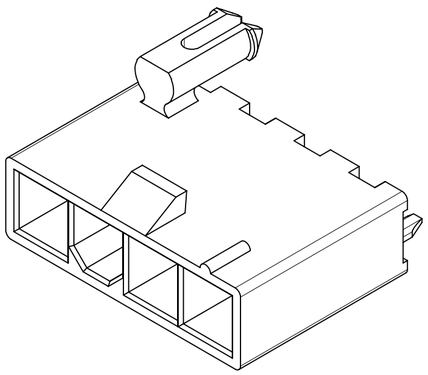

LOCK OPTION

POSITIVE LOCK



PASSIVE LOCK

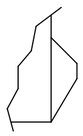

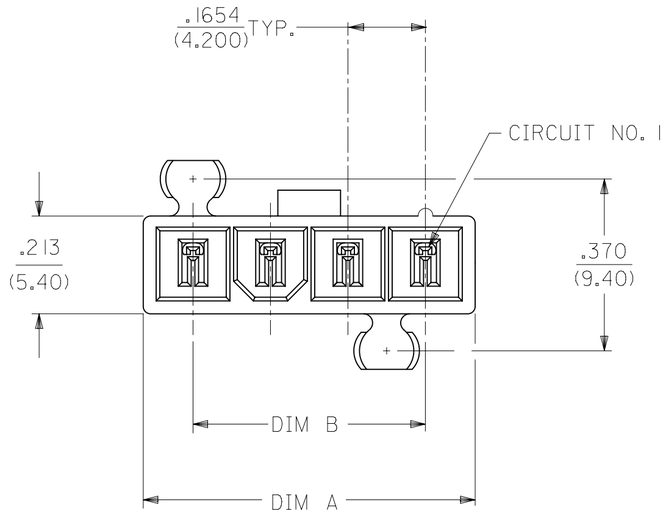

LEGEND:

5566 - N A * * - *

CIRCUIT SIZE
(04-12)

PEG AND LOCK OPTION
3=MTG. PEGS,POSITIVE LOCK
4=MTG. PEGS,PASSIVE LOCK

PLATING
(SEE NOTE 2)

HOUSING MAT'L
(SEE NOTE 1)

SYMBOLS	
A = 0	
C = 0	
F = 0	
S = 0	
▼ = 0	
C = 0	
☒ = 0	
■ = 0	
V = 0	

THIS DRAWING CONTAINS INFORMATION THAT IS PROPRIETARY TO MOLEX ELECTRONIC TECHNOLOGIES, LLC AND SHOULD NOT BE USED WITHOUT WRITTEN PERMISSION

DIMENSION UNITS: IN/MM
SCALE: 4:1

GENERAL TOLERANCES (UNLESS SPECIFIED)

	MM	INCH
4 PLACES	±	±
3 PLACES	±	± 0.015
2 PLACES	± 0.38	± 0.02
1 PLACE	± 0.5	±
0 PLACES	±	±
ANGULAR TOL	± 0.5 °	

DRAFT WHERE APPLICABLE MUST REMAIN WITHIN DIMENSIONS

CURRENT REV DESC:

EC NO: 806008
DRWN: JERRYW8 2024/11/27
CHK'D: XQZHANG 2024/12/09
APPR: XQZHANG 2024/12/09

INITIAL REVISION:
DRWN: KSS 1989/02/19
APPR: FSMITH 2012/05/06

THIRD ANGLE PROJECTION | DRAWING: C-SIZE | SERIES: 5566

molex

VERT HDR ASSY W/ PEGS MINIFIT JR SR

PRODUCT CUSTOMER DRAWING

DOCUMENT NUMBER	DOC TYPE	DOC PART	REVISION
55660001-SD	PSD	000	B1

MATERIAL NUMBER	CUSTOMER	SHEET NUMBER
SEE TABLE	GENERAL MARKET	1 OF 3

DOCUMENT STATUS	P1	RELEASE DATE	2024/12/09 01:53:09

FORMAT: Eng-lega-master-tb-prod-C
REVISION: P
DATE: 2018/01/18

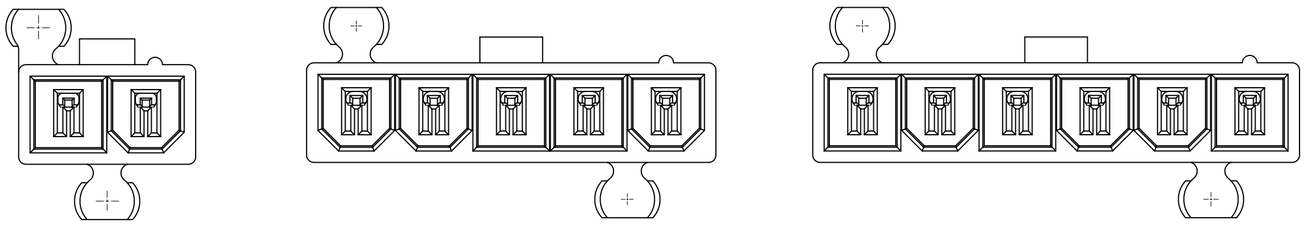

2 CIRCUIT

5 CIRCUIT

6 CIRCUIT

POLARIZATION

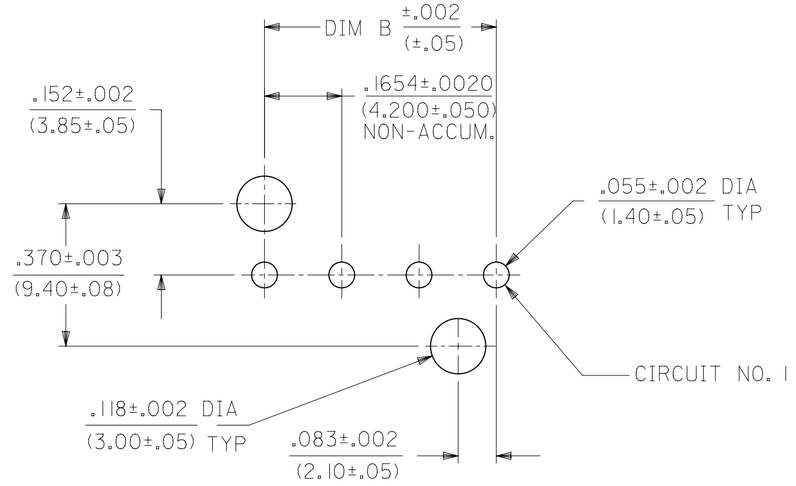

RECOMMENDED HOLE LAYOUT FOR
.070/(1.78) MAX. THICK P.C. BOARD
VIEWED FROM COMPONENT SIDE
4-12 CIRCUIT PART

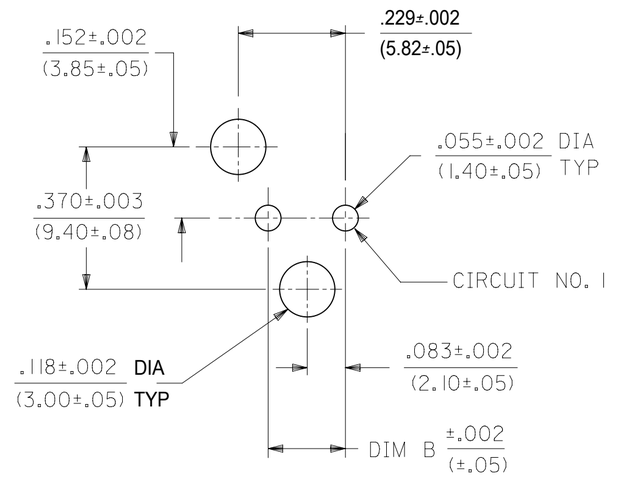

RECOMMENDED HOLE LAYOUT FOR
.070/(1.78) MAX. THICK P.C. BOARD
VIEWED FROM COMPONENT SIDE
2 CIRCUIT PART

SYMBOLS	
FA = 0	
FC = 0	
FD = 0	
S = 0	
▼ = 0	
C = 0	
☒ = 0	
■ = 0	
G = 0	

THIS DRAWING CONTAINS INFORMATION THAT IS PROPRIETARY TO MOLEX ELECTRONIC TECHNOLOGIES, LLC AND SHOULD NOT BE USED WITHOUT WRITTEN PERMISSION

DIMENSION UNITS	SCALE
IN/MM	4:1

GENERAL TOLERANCES (UNLESS SPECIFIED)

	MM	INCH
4 PLACES	±	±
3 PLACES	±	± 0.015
2 PLACES	± 0.38	± 0.02
1 PLACE	± 0.5	±
0 PLACES	±	±
ANGULAR TOL	± 0.5 °	

DRAFT WHERE APPLICABLE MUST REMAIN WITHIN DIMENSIONS

CURRENT REV DESC:

EC NO: 806008
DRWN: JERRYW8 2024/11/27
CHK'D: XQZHANG 2024/12/09
APPR: XQZHANG 2024/12/09

INITIAL REVISION:
DRWN: KSS 1989/02/19
APPR: FSMITH 2012/05/06

molex

VERT HDR ASSY W/ PEGS MINIFIT JR SR

PRODUCT CUSTOMER DRAWING

DOCUMENT NUMBER	DOC TYPE	DOC PART	REVISION
55660001-SD	PSD	000	B1

THIRD ANGLE PROJECTION	DRAWING	SERIES	MATERIAL NUMBER	CUSTOMER	SHEET NUMBER
	C-SIZE	5566	SEE TABLE	GENERAL MARKET	2 OF 3

DOCUMENT STATUS	P1	RELEASE DATE	2024/12/09 01:53:09

FORMAT: Eng-lega-master-tb-prod-C
REVISION: D
DATE: 2018/01/18

POSITIVE LOCK WITH MTG. PEGS, 94V-2 HOUSING MATERIAL			
PART NO	ENG NO	CKT SIZE	PLATING OPTION
39-30-1049	5566-04A3	4	TIN OVER COPPER
39-30-1059	5566-05A3	5	TIN OVER COPPER
46999-0669	5566-02A3GS	2	30 M.I. SELECT GOLD
39-30-2041	5566-04A3GS	4	30 M.I. SELECT GOLD
39-30-2051	5566-05A3GS	5	30 M.I. SELECT GOLD
39-30-2061	5566-06A3GS	6	30 M.I. SELECT GOLD
50-36-2453	5566-04A3S	4	BRIGHT TIN OVER NICKEL
50-36-2454	5566-05A3S	5	BRIGHT TIN OVER NICKEL
46999-0673	5566-02A3MS	2	MATTE TIN OVER NICKEL
46999-0610	5566-04A3MS	4	MATTE TIN OVER NICKEL
46999-0611	5566-05A3MS	5	MATTE TIN OVER NICKEL
46999-0674	5566-06A3MS	6	MATTE TIN OVER NICKEL

POSITIVE LOCK WITH MTG. PEGS, 94V-2 BLACK HOUSING			
PART NO	ENG NO	CKT SIZE	PLATING OPTION
50-29-1528	5566-04A3-BL	4	TIN OVER COPPER
50-29-1529	5566-05A3-BL	5	TIN OVER COPPER
26-01-3162	5566-04A3S-BL	4	BRIGHT TIN OVER NICKEL
26-01-3163	5566-05A3S-BL	5	BRIGHT TIN OVER NICKEL

POSITIVE LOCK WITH MTG. PEGS, 94V-0 HOUSING MATERIAL			
PART NO	ENG NO	CKT SIZE	PLATING OPTION
39-30-2040	5566-04A3-210	4	TIN OVER COPPER
39-30-2050	5566-05A3-210	5	TIN OVER COPPER
46999-0670	5566-02A3GS-210	2	30 M.I. SELECT GOLD
39-30-2042	5566-04A3GS-210	4	30 M.I. SELECT GOLD
39-30-2052	5566-05A3GS-210	5	30 M.I. SELECT GOLD
39-30-2062	5566-06A3GS-210	6	30 M.I. SELECT GOLD
50-36-2356	5566-04A3S-210	4	BRIGHT TIN OVER NICKEL
50-36-2452	5566-05A3S-210	5	BRIGHT TIN OVER NICKEL
46999-0675	5566-02A3MS-210	2	MATTE TIN OVER NICKEL
46999-0627	5566-04A3MS-210	4	MATTE TIN OVER NICKEL
46999-0628	5566-05A3MS-210	5	MATTE TIN OVER NICKEL
46999-0676	5566-06A3MS-210	6	MATTE TIN OVER NICKEL

POSITIVE LOCK WITH MTG. PEGS, 94V-0 BLACK HOUSING			
PART NO	ENG NO	CKT SIZE	PLATING OPTION
46999-0671	5566-02A3GS-400	2	30 M.I. SELECT GOLD
46999-0506	5566-04A3GS-400	4	30 M.I. SELECT GOLD
46999-0507	5566-05A3GS-400	5	30 M.I. SELECT GOLD
46999-0672	5566-06A3GS-400	6	30 M.I. SELECT GOLD
46999-0677	5566-02A3MS-400	2	MATTE TIN OVER NICKEL
46999-0577	5566-04A3MS-400	4	MATTE TIN OVER NICKEL
46999-0578	5566-05A3MS-400	5	MATTE TIN OVER NICKEL
46999-0678	5566-06A3MS-400	6	MATTE TIN OVER NICKEL

PASSIVE LOCK WITH MTG. PEGS, 94V-2 HOUSING MATERIAL			
PART NO	ENG NO	CKT SIZE	PLATING OPTION
NO E.D.P.	5566-04A4GS	4	30 M.I. SELECT GOLD
NO E.D.P.	5566-05A4GS	5	30 M.I. SELECT GOLD

PASSIVE LOCK WITH MTG. PEGS, 94V-0 HOUSING MATERIAL			
PART NO	ENG NO	CKT SIZE	PLATING OPTION
NO E.D.P.	5566-04A4GS-210	4	30 M.I. SELECT GOLD
NO E.D.P.	5566-05A4GS-210	5	30 M.I. SELECT GOLD

DOCUMENT STATUS	P1	RELEASE DATE	2024/12/09 01:53:09

THIS DRAWING CONTAINS INFORMATION THAT IS PROPRIETARY TO MOLEX ELECTRONIC TECHNOLOGIES, LLC AND SHOULD NOT BE USED WITHOUT WRITTEN PERMISSION

SYMBOLS
▽A = 0
▽C = 0
▽F = 0
▽S = 0
▼ = 0
▽C = 0
☒ = 0
■ = 0
▽V = 0

DIMENSION UNITS: IN/MM
SCALE: 1:1

GENERAL TOLERANCES (UNLESS SPECIFIED)

	MM	INCH
4 PLACES	±	±
3 PLACES	±	± 0.015
2 PLACES	± 0.38	± 0.02
1 PLACE	± 0.5	±
0 PLACES	±	±
ANGULAR TOL	± 0.5 °	

DRAFT WHERE APPLICABLE MUST REMAIN WITHIN DIMENSIONS

CURRENT REV DESC:

EC NO: 806008
DRWN: JERRYW8 2024/11/27
CHK'D: XQZHANG 2024/12/09
APPR: XQZHANG 2024/12/09

INITIAL REVISION:
DRWN: KSS 1989/02/19
APPR: FSMITH 2012/05/06

THIRD ANGLE PROJECTION | DRAWING: C-SIZE | SERIES: 5566

molex

VERT HDR ASSY W/ PEGS MINIFIT JR SR

PRODUCT CUSTOMER DRAWING

DOCUMENT NUMBER	DOC TYPE	DOC PART	REVISION
55660001-SD	PSD	000	B1

MATERIAL NUMBER	CUSTOMER	SHEET NUMBER
SEE TABLE	GENERAL MARKET	3 OF 3

FORMAT: Eng-lega-master-tb-prod-C
REVISION: D
DATE: 2019/01/18