| CKT SIZE | DIM "A" | DIM "B" |
|---|---|---|
| 4 | .709 [18.00] | .496 [12.60] |
| 5 | .874 [22.20] | .661 [16.80] |
| 6 | 1.039 [26.40] | .827 [21.00] |
| 7 | 1.205 [30.60] | .992 [25.20] |
| 8 | 1.370 [34.80] | 1.157 [29.40] |
| 9 | 1.535 [39.00] | 1.323 [33.60] |
| 10 | 1.701 [43.20] | 1.488 [37.80] |
| 11 | 1.866 [47.40] | 1.654 [42.00] |
| 12 | 2.031 [51.60] | 1.819 [46.20] |

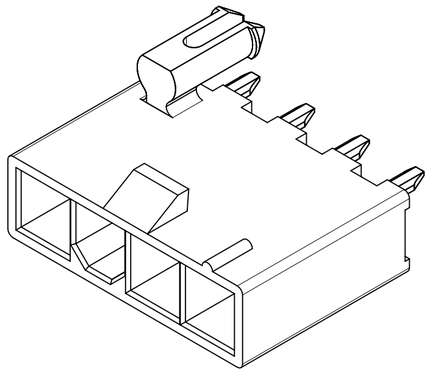

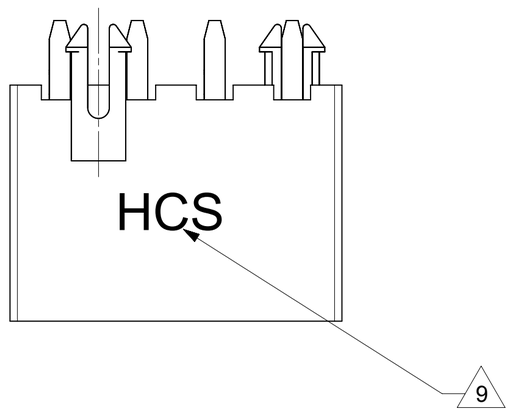


NOTES:
1. MATERIALS:
   HOUSING:
   "1"=NYLON 6/6, UL94 V-2, COLOR: NATURAL
   "2"=NYLON 6/6, UL94 V-0, COLOR: NATURAL
   "3"=NYLON 6/6, UL94 V-2, COLOR: BLACK
   TERMINALS:
   COPPER ALLOY
2. TERMINAL PLATING:
   "1"=.000100/(0.00254) MIN. MATTE TIN OVER .000050/(0.00127) MIN. NICKEL
   "2"=.000030/(0.00076) MIN. SELECT GOLD AND .000100/(0.00254) MIN. SELECT MATTE TIN OVER .000050/(0.00127) MIN. NICKEL OVERALL
3. PRODUCT SPECIFICATION: PS-44476-001
4. PACKAGING: SEE CHARTS
5. PART MATES WITH MINI-FIT JR. RECEPTACLE NO. 5557.
6. PART IS NOT DESIGNED FOR CURRENT SHARING.
7. PARTS ARE NOT TO BE MATED OR UN-MATED WHILE CIRCUITS ARE LIVE.
8. 44472-2470 ONLY FOR WIDER LOCKING RAMP.
9. PARTS WILL HAVE "HCS" MARKING.
10. SEE CHART FOR PARTS WITH PEGS REMOVED.
11. PART CONFORMS TO CLASS "B" REQUIREMENTS OF COSMETIC SPECIFICATION PS-45499-002.
12. 5 CIRCUIT PARTS HAVE PEG DESIGN B. ALL OTHER CIRCUIT SIZES HAVE PEG DESIGN A.

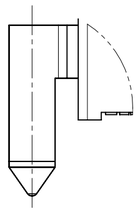

PEG DETAIL B
SEE NOTE 12

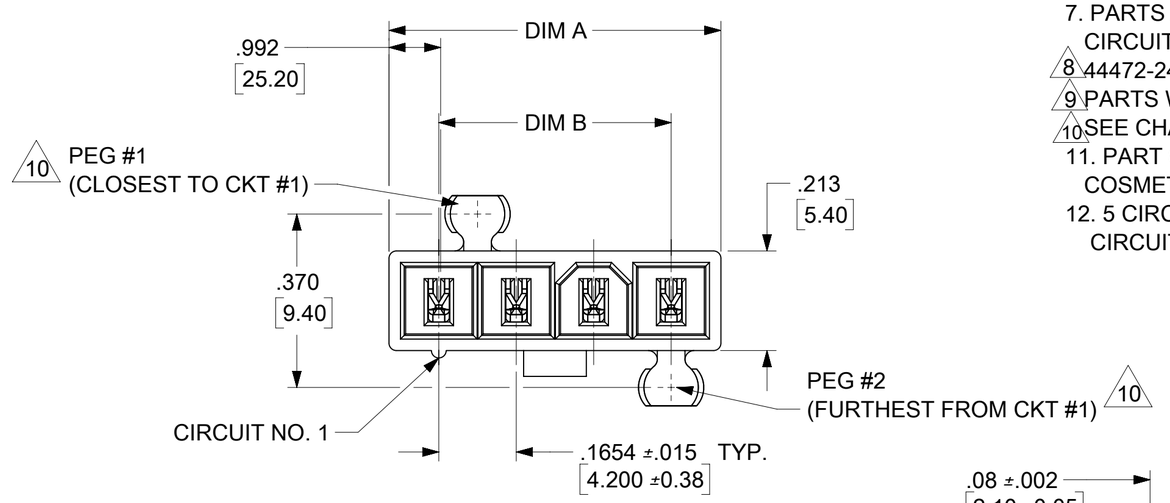


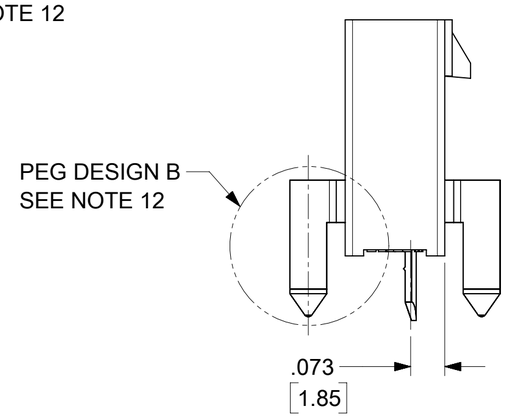


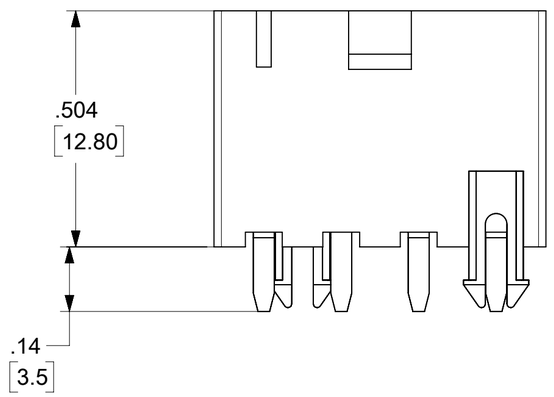


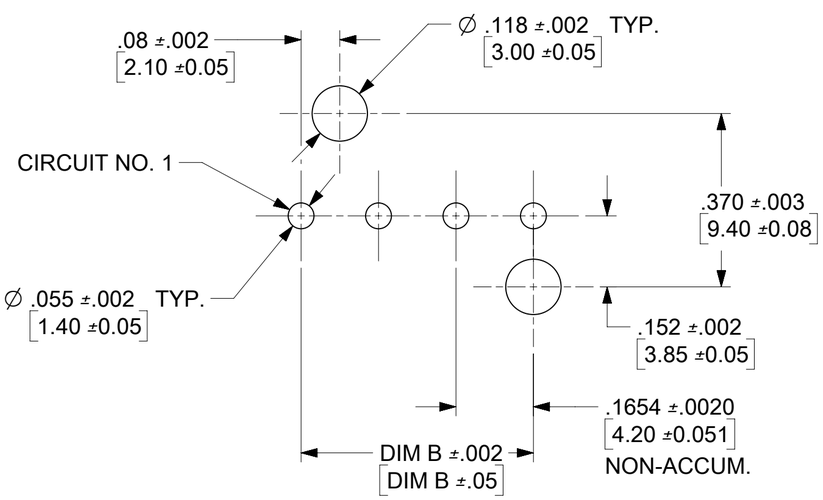


RECOMMENDED HOLE LAYOUT FOR
.070/(1.78) MAX. THICK P.C. BOARD
VIEWED FROM COMPONENT SIDE

LEGEND:

44472 - ** **

CIRCUIT SIZE
(04-12 FOR SINGLE ROW)
(02-24 FOR DUAL ROW)

ASSEMBLY VERSION
(01 THRU 49 FOR SINGLE ROW)
(50 THRU 99 FOR DUAL ROW)

SEE SHT. 2 FOR DUAL ROW
* THE CHART FOR SINGLE ROW PRODUCT IS ON PAGE 6.

| DOCUMENT STATUS | P1 | RELEASE DATE | 2025/04/22 05:23:44 |
|---|---|---|---|

FUNCTIONAL SYMBOLS
FA = 0
FC = 0
FP = 0
DIVISIONAL SYMBOLS

THIS DRAWING CONTAINS INFORMATION THAT IS PROPRIETARY TO MOLEX ELECTRONIC TECHNOLOGIES, LLC AND SHOULD NOT BE USED WITHOUT WRITTEN PERMISSION

DIMENSION UNITS: INCH/MM
SCALE: NTS

GENERAL TOLERANCES (UNLESS SPECIFIED)

| | | |
|---|---|---|
| ANGULAR TOL | ± | 0.5 ° |
| 4 PLACES | ± | |
| 3 PLACES | ± | |
| 2 PLACES | ± | 0.4 |
| 1 PLACE | ± | 0.5 |
| 0 PLACES | ± | |

DRAFT WHERE APPLICABLE MUST REMAIN WITHIN DIMENSIONS

CURRENT REV DESC: REMOVED OBSOLETED PART NUMBERS AS PER PCN#516558

EC NO: 818232
DRWN: VISHAH2 2025/02/21
CHK'D: GGA 2025/04/22
APPR: GGA 2025/04/22

INITIAL REVISION:
DRWN: NNGUYEN 2013/05/08
APPR: FSMITH 2013/06/03

THIRD ANGLE PROJECTION | DRAWING: C-SIZE | SERIES: 44472

molex

MINI-FIT VERT HDR ASSY
W & W/O PEGS SINGLE AND DUAL ROW

PRODUCT CUSTOMER DRAWING

| DOCUMENT NUMBER | DOC TYPE | DOC PART | REVISION |
|---|---|---|---|
| RSD-44472-XXXX | PSD | 001 | M8 |

| MATERIAL NUMBER | CUSTOMER | SHEET NUMBER |
|---|---|---|
| SEE TABLE | GENERAL MARKET | 1 OF 8 |

FORMAT: master-tb-prod-C
REVISION: J1
DATE: 2021/05/01

| CKT SIZE | DIM "A" | DIM "B" | DIM "C" |
|---|---|---|---|
| 2 | .21 [5.4] | --- | .370 [9.40] |
| 4 | .38 [9.6] | .17 [4.2] | .535 [13.60] |
| 6 | .54 [13.8] | .33 [8.4] | .701 [17.80] |
| 8 | .71 [18.0] | .50 [12.6] | .866 [22.00] |
| 10 | .87 [22.2] | .66 [16.8] | 1.031 [26.20] |
| 12 | 1.04 [26.4] | .83 [21.0] | 1.197 [30.40] |
| 14 | 1.20 [30.6] | .99 [25.2] | 1.362 [34.60] |
| 16 | 1.37 [34.8] | 1.16 [29.4] | 1.528 [38.80] |
| 18 | 1.54 [39.0] | 1.32 [33.6] | 1.693 [43.00] |
| 20 | 1.70 [43.2] | 1.49 [37.8] | 1.858 [47.20] |
| 22 | 1.87 [47.4] | 1.65 [42.0] | 2.024 [51.40] |
| 24 | 2.03 [51.6] | 1.82 [46.2] | 2.189 [55.60] |

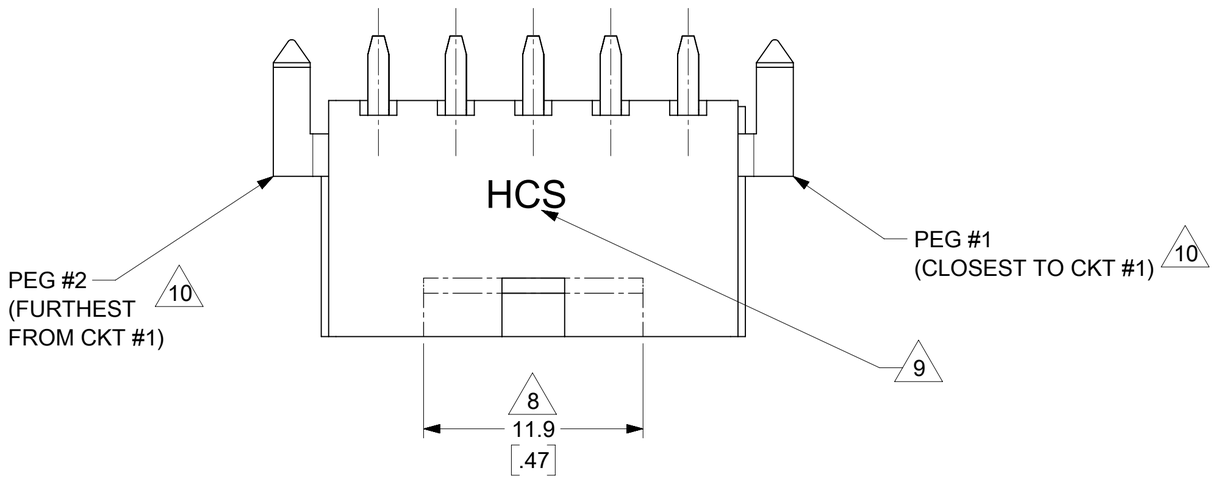


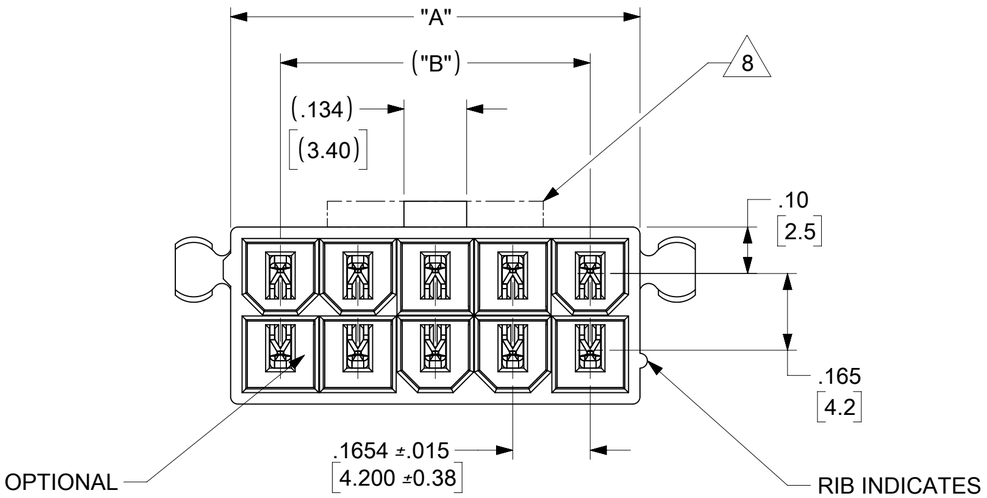


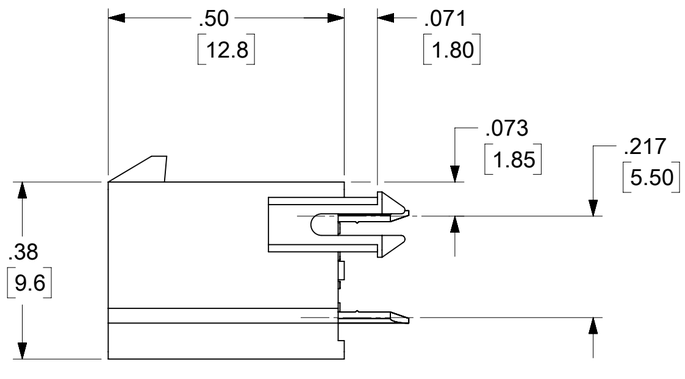


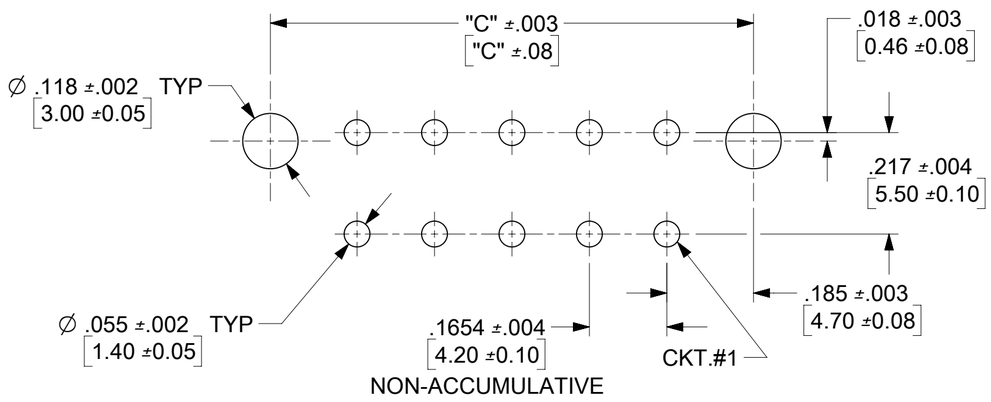


RECOMMENDED HOLE LAYOUT FOR .070/(1.78) MAX. THICK P.C. BOARD
VIEWED FROM COMPONENT SIDE

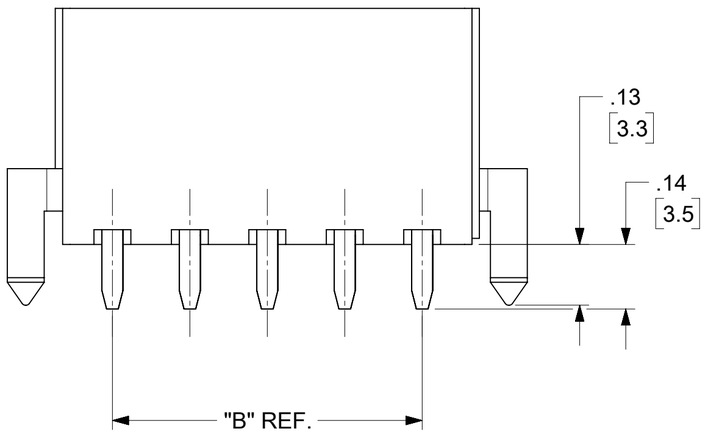


SEE SHT. 1 FOR SINGLE ROW

FUNCTIONAL SYMBOLS
FA = 0
FC = 0
FD = 0
DIVISIONAL SYMBOLS

THIS DRAWING CONTAINS INFORMATION THAT IS PROPRIETARY TO MOLEX ELECTRONIC TECHNOLOGIES, LLC AND SHOULD NOT BE USED WITHOUT WRITTEN PERMISSION

DIMENSION UNITS: INCH/MM
SCALE: NTS

GENERAL TOLERANCES (UNLESS SPECIFIED)

| | |
|---|---|
| ANGULAR TOL | ± 0.5 ° |
| 4 PLACES | ± |
| 3 PLACES | ± |
| 2 PLACES | ± 0.4 |
| 1 PLACE | ± 0.5 |
| 0 PLACES | ± |

DRAFT WHERE APPLICABLE MUST REMAIN WITHIN DIMENSIONS

CURRENT REV DESC: REMOVED OBSOLETED PART NUMBERS AS PER PCN#516558

EC NO: 818232
DRWN: VISHAH2 2025/02/21
CHK'D: GGA 2025/04/22
APPR: GGA 2025/04/22

INITIAL REVISION:
DRWN: NNGUYEN 2013/05/08
APPR: FSMITH 2013/06/03

THIRD ANGLE PROJECTION | DRAWING: C-SIZE | SERIES: 44472

molex

MINI-FIT VERT HDR ASSY
W & W/O PEGS SINGLE AND DUAL ROW

PRODUCT CUSTOMER DRAWING

| DOCUMENT NUMBER | DOC TYPE | DOC PART | REVISION |
|---|---|---|---|
| RSD-44472-XXXX | PSD | 001 | M8 |

| MATERIAL NUMBER | CUSTOMER | SHEET NUMBER |
|---|---|---|
| SEE TABLE | GENERAL MARKET | 2 OF 8 |

| DOCUMENT STATUS | P1 | RELEASE DATE | 2025/04/22 05:23:44 |
|---|---|---|---|

FORMAT: master-tb-prod-C
REVISION: J1
DATE: 2021/05/01

# DUAL ROW PART NUMBERS WITH MATTE TIN PLATING

| WITH PEGS | | | | | | | | | | | | | | | | | |
|---|---|---|---|---|---|---|---|---|---|---|---|---|---|---|---|---|---|
| PLATING: | 1 (SEE NOTE 2) | | | PLATING: | 1 (SEE NOTE 2) | | | PLATING: | 1 (SEE NOTE 2) | | | PLATING: | 1 (SEE NOTE 2) | | |
| DRAINS: | WITHOUT DRAIN HOLES | | | DRAINS: | WITHOUT DRAIN HOLES | | | DRAINS: | WITHOUT DRAIN HOLES | | | DRAINS: | WITHOUT DRAIN HOLES | | |
| PEGS: | WITH PEGS | | | PEGS: | WITH PEGS | | | PEGS: | WITH PEGS | | | PEGS: | WITH PEGS | | |
| MAT'L: | 94V-2 [NATURAL] | | | MAT'L: | 94V-0 [NATURAL] | | | MAT'L: | 94V-2 [NATURAL] | | | MAT'L: | 94V-0 [NATURAL] | | |
| PACKAGING: | PK-5566-001 | | | PACKAGING: | PK-5566-001 | | | PACKAGING: | PK-5566-001 | | | PACKAGING: | PK-5566-001 | | |
| ITEM NO. | | | CKTS | ITEM NO. | | | CKTS | ITEM NO. | | | CKTS | ITEM NO. | | | CKTS |
| 44472-0250 | | | 2 | 44472-0251 | | | 2 | | | | 2 | | | | 2 |
| 44472-0450 | | | 4 | 44472-0451 | | | 4 | 44472-0452 | | | 4 | 44472-0453 | | | 4 |
| 44472-0650 | | | 6 | 44472-0651 | | | 6 | 44472-0652 | | | 6 | 44472-0653 | | | 6 |
| 44472-0850 | | | 8 | 44472-0851 | | | 8 | 44472-0852 | | | 8 | 44472-0853 | | | 8 |
| 44472-1050 | | | 10 | 44472-1051 | | | 10 | --- | | | 10 | 44472-1053 | | | 10 |
| 44472-1250 | | | 12 | 44472-1251 | | | 12 | 44472-1252 | | | 12 | 44472-1253 | | | 12 |
| 44472-1450 | | | 14 | 44472-1451 | | | 14 | 44472-1452 | | | 14 | 44472-1453 | | | 14 |
| 44472-1650 | | | 16 | 44472-1651 | | | 16 | 44472-1652 | | | 16 | 44472-1653 | | | 16 |
| 44472-1850 | | | 18 | 44472-1851 | | | 18 | 44472-1852 | | | 18 | 44472-1853 | | | 18 |
| 44472-2050 | | | 20 | 44472-2051 | | | 20 | --- | | | 20 | 44472-2053 | | | 20 |
| 44472-2250 | | | 22 | 44472-2251 | | | 22 | 44472-2252 | | | 22 | 44472-2253 | | | 22 |
| 44472-2450 | | | 24 | 44472-2451 | | | 24 | 44472-2452 | | | 24 | 44472-2453 | | | 24 |
| | | | | | | | | | | | | | | | |
| | | | | | | | | | | | | | | | |

| WITHOUT PEGS | | | | | | | | | | | | | | | | | |
|---|---|---|---|---|---|---|---|---|---|---|---|---|---|---|---|---|---|
| PLATING: | 1 (SEE NOTE 2) | | | PLATING: | 1 (SEE NOTE 2) | | | PLATING: | 1 (SEE NOTE 2) | | | PLATING: | 1 (SEE NOTE 2) | | |
| DRAINS: | WITHOUT DRAIN HOLES | | | DRAINS: | WITHOUT DRAIN HOLES | | | DRAINS: | WITHOUT DRAIN HOLES | | | DRAINS: | WITHOUT DRAIN HOLES | | |
| PEGS: | WITHOUT PEGS | | | PEGS: | WITHOUT PEGS | | | PEGS: | WITHOUT PEGS | | | PEGS: | WITHOUT PEGS | | |
| MAT'L: | 94V-2 [NATURAL] | | | MAT'L: | 94V-0 [NATURAL] | | | MAT'L: | 94V-2 [NATURAL] | | | MAT'L: | 94V-0 [NATURAL] | | |
| PACKAGING: | PK-5566-001 | | | PACKAGING: | PK-5566-001 | | | PACKAGING: | PK-5566-001 | | | PACKAGING: | PK-5566-001 | | |
| ITEM NO. | HOUSING NO. | | CKTS | ITEM NO. | | | CKTS | ITEM NO. | | | CKTS | ITEM NO. | | | CKTS |
| 44472-0254 | | | 2 | 44472-0255 | | | 2 | --- | | | 2 | --- | | | 2 |
| 44472-0454 | | | 4 | 44472-0455 | | | 4 | --- | | | 4 | --- | | | 4 |
| 44472-0654 | | | 6 | 44472-0655 | | | 6 | --- | | | 6 | 44472-0657 | | | 6 |
| 44472-0854 | | | 8 | 44472-0855 | | | 8 | --- | | | 8 | --- | | | 8 |
| 44472-1054 | | | 10 | 44472-1055 | | | 10 | --- | | | 10 | --- | | | 10 |
| 44472-1254 | | | 12 | 44472-1255 | | | 12 | --- | | | 12 | 44472-1257 | | | 12 |
| 44472-1454 | | | 14 | 44472-1455 | | | 14 | --- | | | 14 | --- | | | 14 |
| 44472-1654 | | | 16 | 44472-1655 | | | 16 | --- | | | 16 | --- | | | 16 |
| 44472-1854 | | | 18 | 44472-1855 | | | 18 | 44472-1856 | | | 18 | 44472-1857 | | | 18 |
| 44472-2054 | | | 20 | 44472-2055 | | | 20 | --- | | | 20 | 44472-2057 | | | 20 |
| 44472-2254 | | | 22 | 44472-2255 | | | 22 | 44472-2256 | | | 22 | 44472-2257 | | | 22 |
| 44472-2454 | | | 24 | 44472-2455 | | | 24 | 44472-2456 | | | 24 | 44472-2457 | | | 24 |
| | | | | | | | | | | | | | | | |
| | | | | | | | | | | | | | | | |

-ITEMS PRECEDED BY AN "X" ARE NOT AVAILABLE.

FUNCTIONAL SYMBOLS
FA = 0
FC = 0
FP = 0
DIVISIONAL SYMBOLS

THIS DRAWING CONTAINS INFORMATION THAT IS PROPRIETARY TO MOLEX ELECTRONIC TECHNOLOGIES, LLC AND SHOULD NOT BE USED WITHOUT WRITTEN PERMISSION

DIMENSION UNITS: INCH/MM | SCALE: NTS

GENERAL TOLERANCES (UNLESS SPECIFIED)

| | |
|---|---|
| ANGULAR TOL | ± 0.5 ° |
| 4 PLACES | ± |
| 3 PLACES | ± |
| 2 PLACES | ± 0.4 |
| 1 PLACE | ± 0.5 |
| 0 PLACES | ± |

DRAFT WHERE APPLICABLE MUST REMAIN WITHIN DIMENSIONS

CURRENT REV DESC: REMOVED OBSOLETED PART NUMBERS AS PER PCN#516558

EC NO: 818232
DRWN: VISHAH2 2025/02/21
CHK'D: GGA 2025/04/22
APPR: GGA 2025/04/22

INITIAL REVISION:
DRWN: NNGUYEN 2013/05/08
APPR: FSMITH 2013/06/03

molex

MINI-FIT VERT HDR ASSY
W & W/O PEGS SINGLE AND DUAL ROW

PRODUCT CUSTOMER DRAWING

| DOCUMENT NUMBER | DOC TYPE | DOC PART | REVISION |
|---|---|---|---|
| RSD-44472-XXXX | PSD | 001 | M8 |

| THIRD ANGLE PROJECTION | DRAWING | SERIES | MATERIAL NUMBER | CUSTOMER | SHEET NUMBER |
|---|---|---|---|---|---|
| | C-SIZE | 44472 | SEE TABLE | GENERAL MARKET | 3 OF 8 |

| DOCUMENT STATUS | P1 | RELEASE DATE | 2025/04/22 05:23:44 |
|---|---|---|---|

FORMAT: master-tb-prod-C
REVISION: J1
DATE: 2021/05/01

# DUAL ROW PART NUMBERS WITH SELECT GOLD PLATING

| WITH PEGS | | | | | | | |
|---|---|---|---|---|---|---|---|
| PLATING: | 2 (SEE NOTE 2) | | | PLATING: | 2 (SEE NOTE 2) | | |
| DRAINS: | WITHOUT DRAIN HOLES | | | DRAINS: | WITHOUT DRAIN HOLES | | |
| PEGS: | WITH PEGS | | | PEGS: | WITH PEGS | | |
| MAT'L: | 94V-2 [NATURAL] | | | MAT'L: | 94V-0 [NATURAL] | | |
| PACKAGING: | PK-5566-001 | | | PACKAGING: | PK-5566-001 | | |
| | ITEM NO. | | CKTS | | ITEM NO. | | CKTS |
| X | 44472-0260 | | 2 | X | 44472-0261 | | 2 |
| X | 44472-0460 | | 4 | X | 44472-0461 | | 4 |
| X | 44472-0660 | | 6 | X | 44472-0661 | | 6 |
| X | 44472-0860 | | 8 | X | 44472-0861 | | 8 |
| X | 44472-1060 | | 10 | X | 44472-1061 | | 10 |
| X | 44472-1260 | | 12 | X | 44472-1261 | | 12 |
| X | 44472-1460 | | 14 | X | 44472-1461 | | 14 |
| X | 44472-1660 | | 16 | X | 44472-1661 | | 16 |
| X | 44472-1860 | | 18 | X | 44472-1861 | | 18 |
| X | 44472-2060 | | 20 | X | 44472-2061 | | 20 |
| X | 44472-2260 | | 22 | X | 44472-2261 | | 22 |
| X | 44472-2460 | | 24 | | 44472-2461 | | 24 |
| | | | | | | | |
| | | | | | | | |

| WITHOUT PEGS | | | | | | | |
|---|---|---|---|---|---|---|---|
| PLATING: | 2 (SEE NOTE 2) | | | PLATING: | 2 (SEE NOTE 2) | | |
| DRAINS: | WITHOUT DRAIN HOLES | | | DRAINS: | WITHOUT DRAIN HOLES | | |
| PEGS: | WITHOUT PEGS | | | PEGS: | WITHOUT PEGS | | |
| MAT'L: | 94V-2 [NATURAL] | | | MAT'L: | 94V-0 [NATURAL] | | |
| PACKAGING: | PK-5566-001 | | | PACKAGING: | PK-5566-001 | | |
| | ITEM NO. | | CKTS | | ITEM NO. | | CKTS |
| X | 44472-0264 | | 2 | X | 44472-0265 | | 2 |
| X | 44472-0464 | | 4 | X | 44472-0465 | | 4 |
| X | 44472-0664 | | 6 | X | 44472-0665 | | 6 |
| X | 44472-0864 | | 8 | X | 44472-0865 | | 8 |
| X | 44472-1064 | | 10 | X | 44472-1065 | | 10 |
| X | 44472-1264 | | 12 | X | 44472-1265 | | 12 |
| X | 44472-1464 | | 14 | X | 44472-1465 | | 14 |
| X | 44472-1664 | | 16 | X | 44472-1665 | | 16 |
| X | 44472-1864 | | 18 | X | 44472-1865 | | 18 |
| X | 44472-2064 | | 20 | X | 44472-2065 | | 20 |
| X | 44472-2264 | | 22 | | 44472-2265 | | 22 |
| X | 44472-2464 | | 24 | X | 44472-2465 | | 24 |
| | | | | | | | |
| | | | | | | | |

-ITEMS PRECEDED BY AN "X" ARE NOT AVAILABLE.

THIS DRAWING CONTAINS INFORMATION THAT IS PROPRIETARY TO MOLEX ELECTRONIC TECHNOLOGIES, LLC AND SHOULD NOT BE USED WITHOUT WRITTEN PERMISSION

FUNCTIONAL SYMBOLS
FA = 0
FC = 0
FP = 0
DIVISIONAL SYMBOLS

| DIMENSION UNITS | SCALE |
|---|---|
| INCH/MM | NTS |

GENERAL TOLERANCES (UNLESS SPECIFIED)

| | | |
|---|---|---|
| ANGULAR TOL | ± | 0.5 ° |
| 4 PLACES | ± | |
| 3 PLACES | ± | |
| 2 PLACES | ± | 0.4 |
| 1 PLACE | ± | 0.5 |
| 0 PLACES | ± | |

DRAFT WHERE APPLICABLE MUST REMAIN WITHIN DIMENSIONS

CURRENT REV DESC: REMOVED OBSOLETED PART NUMBERS AS PER PCN#516558

EC NO: 818232
DRWN: VISHAH2 2025/02/21
CHK'D: GGA 2025/04/22
APPR: GGA 2025/04/22

INITIAL REVISION:
DRWN: NNGUYEN 2013/05/08
APPR: FSMITH 2013/06/03

molex

MINI-FIT VERT HDR ASSY
W & W/O PEGS SINGLE AND DUAL ROW

PRODUCT CUSTOMER DRAWING

| DOCUMENT NUMBER | DOC TYPE | DOC PART | REVISION |
|---|---|---|---|
| RSD-44472-XXXX | PSD | 001 | M8 |

| THIRD ANGLE PROJECTION | DRAWING | SERIES | MATERIAL NUMBER | CUSTOMER | SHEET NUMBER |
|---|---|---|---|---|---|
| | C-SIZE | 44472 | SEE TABLE | GENERAL MARKET | 4 OF 8 |

| DOCUMENT STATUS | P1 | RELEASE DATE | 2025/04/22 05:23:44 |
|---|---|---|---|

FORMAT: master-tb-prod-C
REVISION: J1
DATE: 2021/05/01

# DUAL ROW PART NUMBERS WITH WIDE LATCH OPTION

| WITH PEGS | | | |
|---|---|---|---|
| PLATING: | 1 (SEE NOTE 2) | | |
| DRAINS: | WITHOUT DRAIN HOLES | | |
| PEGS: | WITH PEGS | | |
| MAT'L: | 94V-2 [NATURAL] | | |
| PACKAGING: | PK-5566-001 | | |
| | ITEM NO. | | CKTS |
| | | | 2 |
| X | 44472-0470 | | 4 |
| X | 44472-0670 | | 6 |
| X | 44472-0870 | | 8 |
| X | 44472-1070 | | 10 |
| X | 44472-1270 | | 12 |
| X | 44472-1470 | | 14 |
| X | 44472-1670 | | 16 |
| X | 44472-1870 | | 18 |
| X | 44472-2070 | | 20 |
| X | 44472-2270 | | 22 |
| | 44472-2470 | 8 | 24 |
| | | | |
| | | | |

-ITEMS PRECEDED BY AN "X" ARE NOT AVAILABLE.

| DOCUMENT STATUS | P1 | RELEASE DATE | 2025/04/22 05:23:44 |
|---|---|---|---|

FORMAT: master-tb-prod-C
REVISION: J1
DATE: 2021/05/01

FUNCTIONAL SYMBOLS
FA = 0
FC = 0
FD = 0
DIVISIONAL SYMBOLS

THIS DRAWING CONTAINS INFORMATION THAT IS PROPRIETARY TO MOLEX ELECTRONIC TECHNOLOGIES, LLC AND SHOULD NOT BE USED WITHOUT WRITTEN PERMISSION

| DIMENSION UNITS | SCALE |
|---|---|
| INCH/MM | NTS |

GENERAL TOLERANCES (UNLESS SPECIFIED)

| | |
|---|---|
| ANGULAR TOL | ± 0.5 ° |
| 4 PLACES | ± |
| 3 PLACES | ± |
| 2 PLACES | ± 0.4 |
| 1 PLACE | ± 0.5 |
| 0 PLACES | ± |

DRAFT WHERE APPLICABLE MUST REMAIN WITHIN DIMENSIONS

CURRENT REV DESC: REMOVED OBSOLETED PART NUMBERS AS PER PCN#516558

EC NO: 818232

| | | |
|---|---|---|
| DRWN: | VISHAH2 | 2025/02/21 |
| CHK'D: | GGA | 2025/04/22 |
| APPR: | GGA | 2025/04/22 |

INITIAL REVISION:

| | | |
|---|---|---|
| DRWN: | NNGUYEN | 2013/05/08 |
| APPR: | FSMITH | 2013/06/03 |

molex

MINI-FIT VERT HDR ASSY
W & W/O PEGS SINGLE AND DUAL ROW

PRODUCT CUSTOMER DRAWING

| DOCUMENT NUMBER | DOC TYPE | DOC PART | REVISION |
|---|---|---|---|
| RSD-44472-XXXX | PSD | 001 | M8 |

| THIRD ANGLE PROJECTION | DRAWING | SERIES | MATERIAL NUMBER | CUSTOMER | SHEET NUMBER |
|---|---|---|---|---|---|
| | C-SIZE | 44472 | SEE TABLE | GENERAL MARKET | 5 OF 8 |

# SINGLE ROW PART NUMBERS WITH PEGS

| MATTE TIN PLATING | | | | | | | | | | | | | | | | | | | | | |
|---|---|---|---|---|---|---|---|---|---|---|---|---|---|---|---|---|---|---|---|---|---|
| PLATING: | | | | PLATING: | | | | PLATING: | 1 (SEE NOTE 2) | | | | PLATING: | 1 (SEE NOTE 2) | | | | | | | |
| DRAINS: | | | | DRAINS: | | | | DRAINS: | WITHOUT DRAIN HOLES | | | | DRAINS: | WITHOUT DRAIN HOLES | | | | | | | |
| PEGS: | | | | PEGS: | | | | PEGS: | WITH PEGS | | | | PEGS: | WITH PEGS | | | | | | | |
| MAT'L: | | | | MAT'L: | | | | MAT'L: | 94V-2 [NATURAL] | | | | MAT'L: | 94V-0 [NATURAL] | | | | | | | |
| PACKAGING: | | | | PACKAGING: | | | | PACKAGING: | PK-5566-002 | | | | PACKAGING: | PK-5566-002 | | | | | | | |
| | ITEM NO. | | CKTS | | ITEM NO. | | CKTS | | ITEM NO. | | CKTS | | ITEM NO. | | CKTS | | | | | | |
| | | | | | | | | | 44472-0403 | | 4 | X | 44472-0404 | | 4 | | | | | | |
| | | | | | | | | X | 44472-0503 | | 5 | | 44472-0504 | | 5 | | | | | | |
| | | | | | | | | X | 44472-0603 | | 6 | X | 44472-0604 | | 6 | | | | | | |
| | | | | | | | | X | 44472-0703 | | 7 | X | 44472-0704 | | 7 | | | | | | |
| | | | | | | | | X | 44472-0803 | | 8 | X | 44472-0804 | | 8 | | | | | | |
| | | | | | | | | X | 44472-0903 | | 9 | X | 44472-0904 | | 9 | | | | | | |
| | | | | | | | | X | 44472-1003 | | 10 | X | 44472-1004 | | 10 | | | | | | |
| | | | | | | | | X | 44472-1103 | | 11 | X | 44472-1104 | | 11 | | | | | | |
| | | | | | | | | X | 44472-1203 | | 12 | X | 44472-1204 | | 12 | | | | | | |
| | | | | | | | | | | | | | | | | | | | | | |
| | | | | | | | | | | | | | | | | | | | | | |

| GOLD PLATING | | | | | | | | | | | | | | | | | | | | | |
|---|---|---|---|---|---|---|---|---|---|---|---|---|---|---|---|---|---|---|---|---|---|
| PLATING: | | | | PLATING: | | | | PLATING: | 2 (SEE NOTE 2) | | | | PLATING: | 2 (SEE NOTE 2) | | | | | | | |
| DRAINS: | | | | DRAINS: | | | | DRAINS: | WITHOUT DRAIN HOLES | | | | DRAINS: | WITHOUT DRAIN HOLES | | | | | | | |
| PEGS: | | | | PEGS: | | | | PEGS: | WITH PEGS | | | | PEGS: | WITH PEGS | | | | | | | |
| MAT'L: | | | | MAT'L: | | | | MAT'L: | 94V-2 [NATURAL] | | | | MAT'L: | 94V-0 [NATURAL] | | | | | | | |
| PACKAGING: | | | | PACKAGING: | | | | PACKAGING: | PK-5566-002 | | | | PACKAGING: | PK-5566-002 | | | | | | | |
| | ITEM NO. | | CKTS | | ITEM NO. | | CKTS | | ITEM NO. | | CKTS | | ITEM NO. | | CKTS | | | | | | |
| | | | | | | | | X | 44472-0407 | | 4 | X | 44472-0408 | | 4 | | | | | | |
| | | | | | | | | X | 44472-0507 | | 5 | X | 44472-0508 | | 5 | | | | | | |
| | | | | | | | | X | 44472-0607 | | 6 | X | 44472-0608 | | 6 | | | | | | |
| | | | | | | | | X | 44472-0707 | | 7 | X | 44472-0708 | | 7 | | | | | | |
| | | | | | | | | X | 44472-0807 | | 8 | X | 44472-0808 | | 8 | | | | | | |
| | | | | | | | | X | 44472-0907 | | 9 | X | 44472-0908 | | 9 | | | | | | |
| | | | | | | | | X | 44472-1007 | | 10 | X | 44472-1008 | | 10 | | | | | | |
| | | | | | | | | X | 44472-1107 | | 11 | X | 44472-1108 | | 11 | | | | | | |
| | | | | | | | | X | 44472-1207 | | 12 | X | 44472-1208 | | 12 | | | | | | |
| | | | | | | | | | | | | | | | | | | | | | |
| | | | | | | | | | | | | | | | | | | | | | |

-ITEMS PRECEDED BY AN "X" ARE NOT AVAILABLE.

| DOCUMENT STATUS | P1 | RELEASE DATE | 2025/04/22 05:23:44 |
|---|---|---|---|

FORMAT: master-tb-prod-C
REVISION: J1
DATE: 2021/05/01

FUNCTIONAL SYMBOLS
FA = 0
FC = 0
FP = 0
DIVISIONAL SYMBOLS

THIS DRAWING CONTAINS INFORMATION THAT IS PROPRIETARY TO MOLEX ELECTRONIC TECHNOLOGIES, LLC AND SHOULD NOT BE USED WITHOUT WRITTEN PERMISSION

| DIMENSION UNITS | SCALE |
|---|---|
| INCH/MM | NTS |

GENERAL TOLERANCES (UNLESS SPECIFIED)

| | | |
|---|---|---|
| ANGULAR TOL | ± | 0.5 ° |
| 4 PLACES | ± | |
| 3 PLACES | ± | |
| 2 PLACES | ± | 0.4 |
| 1 PLACE | ± | 0.5 |
| 0 PLACES | ± | |

DRAFT WHERE APPLICABLE MUST REMAIN WITHIN DIMENSIONS

CURRENT REV DESC: REMOVED OBSOLETED PART NUMBERS AS PER PCN#516558

EC NO: 818232
DRWN: VISHAH2 2025/02/21
CHK'D: GGA 2025/04/22
APPR: GGA 2025/04/22

INITIAL REVISION:
DRWN: NNGUYEN 2013/05/08
APPR: FSMITH 2013/06/03

molex

MINI-FIT VERT HDR ASSY
W & W/O PEGS SINGLE AND DUAL ROW

PRODUCT CUSTOMER DRAWING

| DOCUMENT NUMBER | DOC TYPE | DOC PART | REVISION |
|---|---|---|---|
| RSD-44472-XXXX | PSD | 001 | M8 |

| THIRD ANGLE PROJECTION | DRAWING | SERIES | MATERIAL NUMBER | CUSTOMER | SHEET NUMBER |
|---|---|---|---|---|---|
| | C-SIZE | 44472 | SEE TABLE | GENERAL MARKET | 6 OF 8 |

# DUAL ROW PART NUMBERS 1 PEG REMOVED

| PLATING: | 1 (SEE NOTE 2) | PLATING: | 1 (SEE NOTE 2) | PLATING: | | PLATING: | |
|---|---|---|---|---|---|---|---|
| DRAINS: | WITHOUT DRAIN HOLES | DRAINS: | WITHOUT DRAIN HOLES | DRAINS: | | DRAINS: | |
| PEGS: | PEG #1 REMOVED | PEGS: | PEG #1 REMOVED | PEGS: | PEG #1 REMOVED | PEGS: | PEG #1 REMOVED |
| MAT'L: | 94V-2 [NATURAL] | MAT'L: | 94V-2 [NATURAL] | MAT'L: | | MAT'L: | |
| PACKAGING: | PK-5566-001 | PACKAGING: | PK-5566-001 | PACKAGING: | | PACKAGING: | |

| | ITEM NO. | | CKTS | | ITEM NO. | | CKTS | | ITEM NO. | | CKTS | | ITEM NO. | | CKTS |
|---|---|---|---|---|---|---|---|---|---|---|---|---|---|---|---|
| X | 44472-0273 | | 2 | X | 44472-0274 | | 2 | | | | 2 | | | | 2 |
| X | 44472-0473 | | 4 | X | 44472-0474 | | 4 | | | | 4 | | | | 4 |
| X | 44472-0673 | | 6 | X | 44472-0674 | | 6 | | | | 6 | | | | 6 |
| X | 44472-0873 | | 8 | X | 44472-0874 | | 8 | | | | 8 | | | | 8 |
| X | 44472-1073 | | 10 | X | 44472-1074 | | 10 | | | | 10 | | | | 10 |
| X | 44472-1273 | | 12 | X | 44472-1274 | | 12 | | | | 12 | | | | 12 |
| X | 44472-1473 | | 14 | X | 44472-1474 | | 14 | | | | 14 | | | | 14 |
| X | 44472-1673 | | 16 | X | 44472-1674 | | 16 | | | | 16 | | | | 16 |
| X | 44472-1873 | | 18 | X | 44472-1874 | | 18 | | | | 18 | | | | 18 |
| | 44472-2073 | | 20 | | 44472-2074 | | 20 | | | | 20 | | | | 20 |
| X | 44472-2273 | | 22 | X | 44472-2274 | | 22 | | | | 22 | | | | 22 |
| X | 44472-2473 | | 24 | X | 44472-2474 | | 24 | | | | 24 | | | | 24 |
| | | | | | | | | | | | | | | | |
| | | | | | | | | | | | | | | | |

| PLATING: | 1 (SEE NOTE 2) | PLATING: | 1 (SEE NOTE 2) | PLATING: | | PLATING: | |
|---|---|---|---|---|---|---|---|
| DRAINS: | WITHOUT DRAIN HOLES | DRAINS: | WITHOUT DRAIN HOLES | DRAINS: | | DRAINS: | |
| PEGS: | PEG #2 REMOVED | PEGS: | PEG #2 REMOVED | PEGS: | PEG #2 REMOVED | PEGS: | PEG #2 REMOVED |
| MAT'L: | 94V-2 [NATURAL] | MAT'L: | 94V-2 [NATURAL] | MAT'L: | | MAT'L: | |
| PACKAGING: | PK-5566-001 | PACKAGING: | PK-5566-001 | PACKAGING: | | PACKAGING: | |

| | ITEM NO. | | CKTS | | ITEM NO. | | CKTS | | ITEM NO. | | CKTS | | ITEM NO. | | CKTS |
|---|---|---|---|---|---|---|---|---|---|---|---|---|---|---|---|
| X | 44472-0277 | | 2 | X | 44472-0278 | | 2 | | | | 2 | | | | 2 |
| X | 44472-0477 | | 4 | X | 44472-0478 | | 4 | | | | 4 | | | | 4 |
| X | 44472-0677 | | 6 | X | 44472-0678 | | 6 | | | | 6 | | | | 6 |
| X | 44472-0877 | | 8 | X | 44472-0878 | | 8 | | | | 8 | | | | 8 |
| X | 44472-1077 | | 10 | X | 44472-1078 | | 10 | | | | 10 | | | | 10 |
| X | 44472-1277 | | 12 | X | 44472-1278 | | 12 | | | | 12 | | | | 12 |
| X | 44472-1477 | | 14 | X | 44472-1478 | | 14 | | | | 14 | | | | 14 |
| X | 44472-1677 | | 16 | X | 44472-1678 | | 16 | | | | 16 | | | | 16 |
| X | 44472-1877 | | 18 | X | 44472-1878 | | 18 | | | | 18 | | | | 18 |
| | 44472-2077 | | 20 | | 44472-2078 | | 20 | | | | 20 | | | | 20 |
| X | 44472-2277 | | 22 | X | 44472-2278 | | 22 | | | | 22 | | | | 22 |
| X | 44472-2477 | | 24 | X | 44472-2478 | | 24 | | | | 24 | | | | 24 |
| | | | | | | | | | | | | | | | |
| | | | | | | | | | | | | | | | |

-ITEMS PRECEDED BY AN "X" ARE NOT AVAILABLE.

| DOCUMENT STATUS | P1 | RELEASE DATE | 2025/04/22 05:23:44 |
|---|---|---|---|

FORMAT: master-tb-prod-C
REVISION: J1
DATE: 2021/05/01

FUNCTIONAL SYMBOLS
FA = 0
FC = 0
FD = 0
DIVISIONAL SYMBOLS

THIS DRAWING CONTAINS INFORMATION THAT IS PROPRIETARY TO MOLEX ELECTRONIC TECHNOLOGIES, LLC AND SHOULD NOT BE USED WITHOUT WRITTEN PERMISSION

| DIMENSION UNITS | SCALE |
|---|---|
| INCH/MM | NTS |

GENERAL TOLERANCES (UNLESS SPECIFIED)

| | |
|---|---|
| ANGULAR TOL | ± 0.5 ° |
| 4 PLACES | ± |
| 3 PLACES | ± |
| 2 PLACES | ± 0.4 |
| 1 PLACE | ± 0.5 |
| 0 PLACES | ± |

DRAFT WHERE APPLICABLE MUST REMAIN WITHIN DIMENSIONS

CURRENT REV DESC: REMOVED OBSOLETED PART NUMBERS AS PER PCN#516558

EC NO: 818232
DRWN: VISHAH2 2025/02/21
CHK'D: GGA 2025/04/22
APPR: GGA 2025/04/22

INITIAL REVISION:
DRWN: NNGUYEN 2013/05/08
APPR: FSMITH 2013/06/03

molex

MINI-FIT VERT HDR ASSY
W & W/O PEGS SINGLE AND DUAL ROW

PRODUCT CUSTOMER DRAWING

| DOCUMENT NUMBER | DOC TYPE | DOC PART | REVISION |
|---|---|---|---|
| RSD-44472-XXXX | PSD | 001 | M8 |

| THIRD ANGLE PROJECTION | DRAWING | SERIES | MATERIAL NUMBER | CUSTOMER | SHEET NUMBER |
|---|---|---|---|---|---|
| | C-SIZE | 44472 | SEE TABLE | GENERAL MARKET | 7 OF 8 |

# DUAL ROW PART NUMBERS WITH MATTE TIN PLATING
# (DO NOT USE FOR NEW APPLICATION)

| WITH PEGS | |
|---|---|
| PLATING: | 1 (SEE NOTE 2) |
| DRAINS: | WITHOUT DRAIN HOLES |
| PEGS: | WITH PEGS |
| MAT'L: | 94V-0 [NATURAL] |
| PACKAGING: | |

| | ITEM NO. | | | CKTS |
|---|---|---|---|---|
| | 44472-0283 | O | | 2 |
| | 44472-0483 | O | | 4 |
| | 44472-0683 | O | | 6 |
| | --- | O | | 8 |
| | 44472-1083 | O | | 10 |
| | 44472-1283 | O | | 12 |
| | 44472-1483 | O | | 14 |
| | 44472-1683 | O | | 16 |
| | 44472-1883 | O | | 18 |
| | 44472-2083 | | | 20 |
| | 44472-2283 | | | 22 |
| | 44472-2483 | O | | 24 |
| | | | | |
| | | | | |

"O" OBSOLETE

THIS DRAWING CONTAINS INFORMATION THAT IS PROPRIETARY TO MOLEX ELECTRONIC TECHNOLOGIES, LLC AND SHOULD NOT BE USED WITHOUT WRITTEN PERMISSION

FUNCTIONAL SYMBOLS
FA = 0
FC = 0
FP = 0

DIVISIONAL SYMBOLS

| DIMENSION UNITS | SCALE |
|---|---|
| INCH/MM | NTS |

GENERAL TOLERANCES (UNLESS SPECIFIED)

| | |
|---|---|
| ANGULAR TOL | ± 0.5 ° |
| 4 PLACES | ± |
| 3 PLACES | ± |
| 2 PLACES | ± 0.4 |
| 1 PLACE | ± 0.5 |
| 0 PLACES | ± |

DRAFT WHERE APPLICABLE MUST REMAIN WITHIN DIMENSIONS

CURRENT REV DESC: REMOVED OBSOLETED PART NUMBERS AS PER PCN#516558

EC NO: 818232
DRWN: VISHAH2 2025/02/21
CHK'D: GGA 2025/04/22
APPR: GGA 2025/04/22

INITIAL REVISION:
DRWN: NNGUYEN 2013/05/08
APPR: FSMITH 2013/06/03

molex

MINI-FIT VERT HDR ASSY
W & W/O PEGS SINGLE AND DUAL ROW

PRODUCT CUSTOMER DRAWING

| DOCUMENT NUMBER | DOC TYPE | DOC PART | REVISION |
|---|---|---|---|
| RSD-44472-XXXX | PSD | 001 | M8 |

| THIRD ANGLE PROJECTION | DRAWING | SERIES | MATERIAL NUMBER | CUSTOMER | SHEET NUMBER |
|---|---|---|---|---|---|
| | C-SIZE | 44472 | SEE TABLE | GENERAL MARKET | 8 OF 8 |

| DOCUMENT STATUS | P1 | RELEASE DATE | 2025/04/22 05:23:44 |
|---|---|---|---|

FORMAT: master-tb-prod-C
REVISION: J1
DATE: 2021/05/01