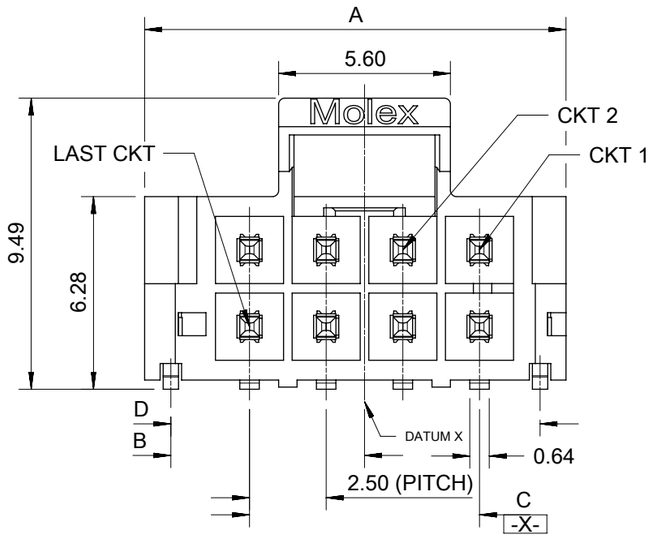

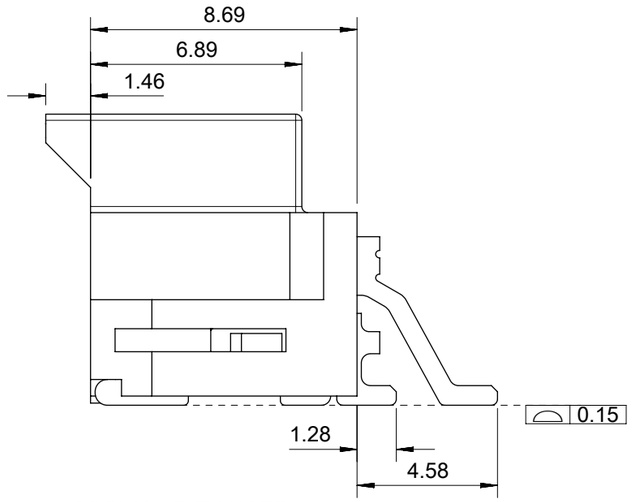

COPLANARITY NOTE:
THE COPLANARITY DIMENSION IS ESTABLISHED
BY PLACING THE ASSEBLY ON A FLAT SURFACE.
THE DISTANCE FROM THAT SURFACE TO THE
BOTTOM OF ANY TERMINAL MUST NOT EXCEED 0.15MM.

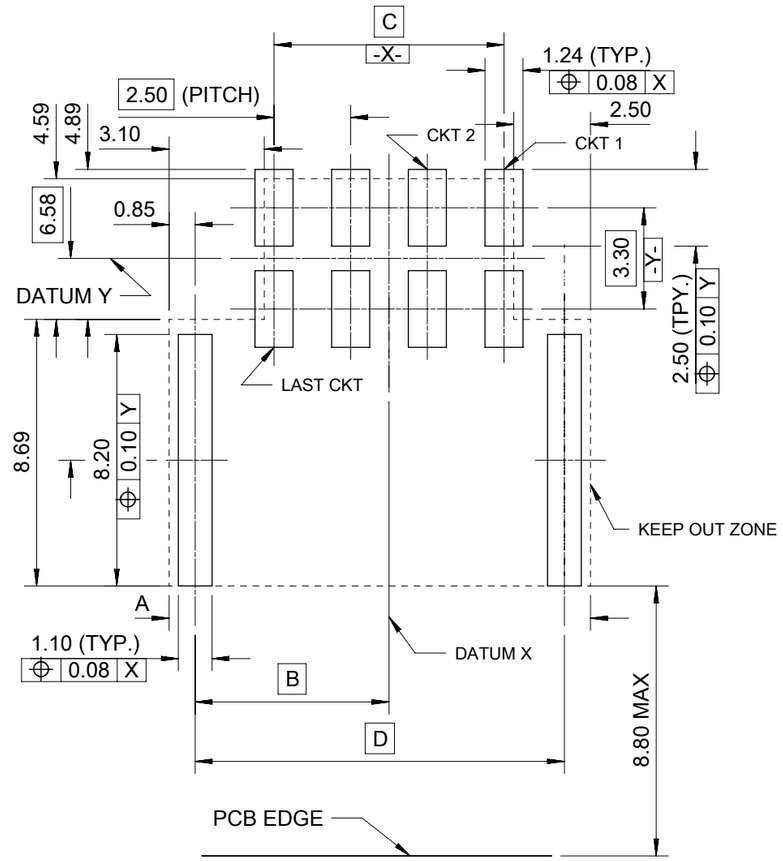

RECOMMENDED PCB LAYOUT (CONNECTOR SIDE VIEW)
THICKNESS=1.6mm MIN. TOLERANCE: ±0.05
RECOMMENDED STENCIL THICKNESS=0.2MM.

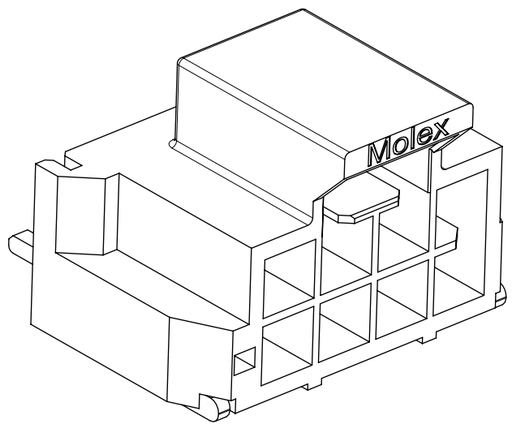

THIS DRAWING CONTAINS INFORMATION THAT IS PROPRIETARY TO MOLEX ELECTRONIC TECHNOLOGIES, LLC AND SHOULD NOT BE USED WITHOUT WRITTEN PERMISSION

DIMENSION UNITS	SCALE
mm	NTS

GENERAL TOLERANCES (UNLESS SPECIFIED)

ANGULAR TOL	± 3.0 °
4 PLACES	±
3 PLACES	±
2 PLACES	± 0.2
1 PLACE	± 0.3
0 PLACES	±

DRAFT WHERE APPLICABLE MUST REMAIN WITHIN DIMENSIONS

CURRENT REV DESC:

EC NO: 826596
DRWN: GLLI 2025/05/23
CHK'D: XQZHANG 2025/06/26
APPR: XQZHANG 2025/06/26

INITIAL REVISION:
DRWN: WJHUO 2014/12/19
APPR: AYIN 2015/03/12

THIRD ANGLE PROJECTION | DRAWING: A3-SIZE | SERIES: 105405

molex

SD DRAWING FOR
SMT HEADER OF NANO-FIT RA DUAL

PRODUCT CUSTOMER DRAWING

DOCUMENT NUMBER	DOC TYPE	DOC PART	REVISION
SD-105405-001	PSD	000	E1

MATERIAL NUMBER	CUSTOMER	SHEET NUMBER
	GENERAL MARKET	1 OF 4

DOCUMENT STATUS	P1	RELEASE DATE	2025/06/26 09:45:47

FORMAT: master-lb-prod-A3
REVISION: J1
DATE: 2021/05/01

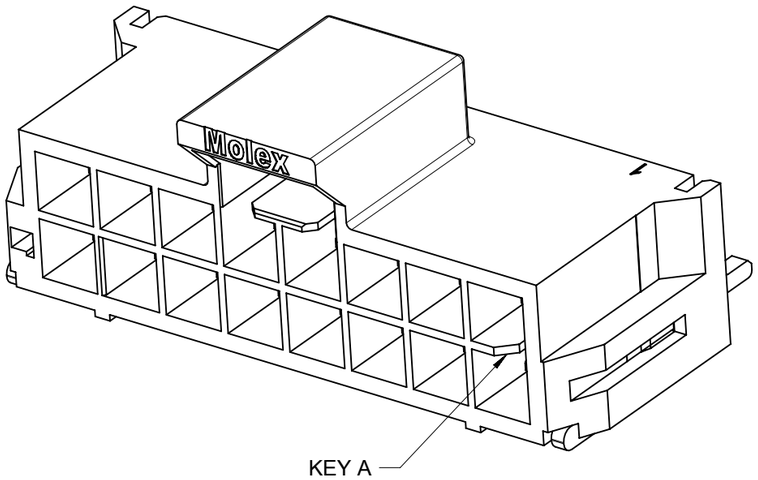

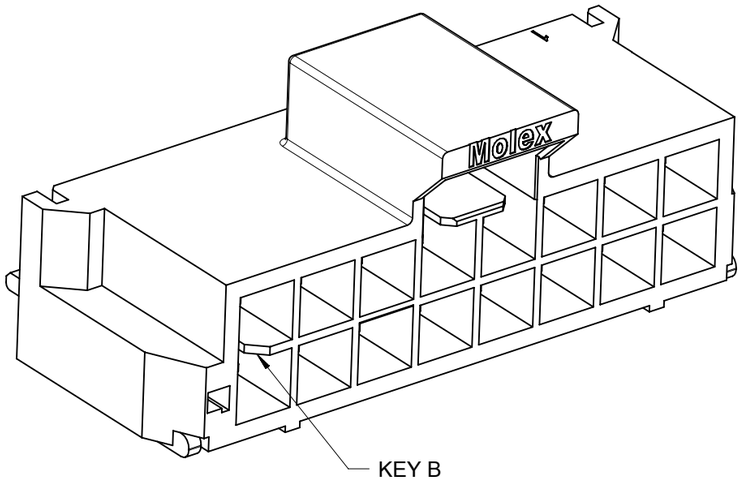

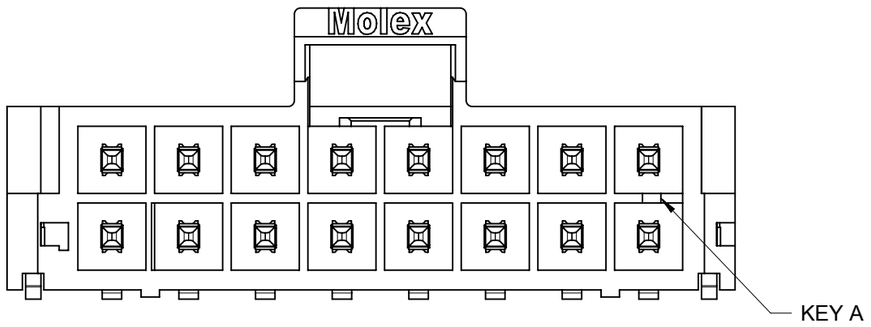

BLACK

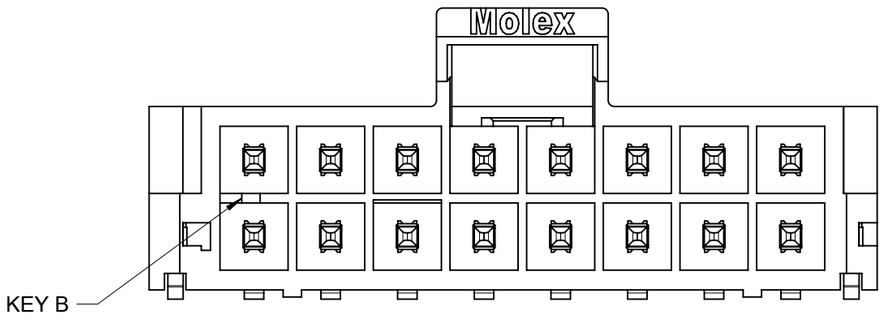

NATURAL

COLOR OPTION

THIS DRAWING CONTAINS INFORMATION THAT IS PROPRIETARY TO MOLEX ELECTRONIC TECHNOLOGIES, LLC AND SHOULD NOT BE USED WITHOUT WRITTEN PERMISSION

DIMENSION UNITS	SCALE
mm	NTS

GENERAL TOLERANCES (UNLESS SPECIFIED)

ANGULAR TOL	± 3.0 °
4 PLACES	±
3 PLACES	±
2 PLACES	± 0.2
1 PLACE	± 0.3
0 PLACES	±

DRAFT WHERE APPLICABLE MUST REMAIN WITHIN DIMENSIONS

CURRENT REV DESC:

EC NO: 826596
DRWN: GLLI 2025/05/23
CHK'D: XQZHANG 2025/06/26
APPR: XQZHANG 2025/06/26

INITIAL REVISION:
DRWN: WJHUO 2014/12/19
APPR: AYIN 2015/03/12

THIRD ANGLE PROJECTION | DRAWING: A3-SIZE | SERIES: 105405

molex

SD DRAWING FOR
SMT HEADER OF NANO-FIT RA DUAL

PRODUCT CUSTOMER DRAWING

DOCUMENT NUMBER	DOC TYPE	DOC PART	REVISION
SD-105405-001	PSD	000	E1

MATERIAL NUMBER	CUSTOMER	SHEET NUMBER
	GENERAL MARKET	2 OF 4

DOCUMENT STATUS	P1	RELEASE DATE	2025/06/26 09:45:47

FORMAT: master-lb-prod-A3
REVISION: J1
DATE: 2021/05/01

PART NUMBER	DIM. A	DIM. B	DIM. C	DIM. D	CKT SIZE	PLATING	LUBE
105405-1104	8.74	3.82	2.50	7.04	4	TIN	NO
105405-1106	11.24	5.07	5.00	9.54	6		
105405-1108	13.74	6.32	7.50	12.04	8		
105405-1110	16.24	7.57	10.00	14.54	10		
105405-1112	18.74	8.82	12.50	17.04	12		
105405-1114	21.24	10.07	15.00	19.54	14		
105405-1116	23.74	11.32	17.50	22.04	16		
105405-1204	8.74	3.82	2.50	7.04	4	GOLD 0.38	
105405-1206	11.24	5.07	5.00	9.54	6		
105405-1208	13.74	6.32	7.50	12.04	8		
105405-1210	16.24	7.57	10.00	14.54	10		
105405-1212	18.74	8.82	12.50	17.04	12		
105405-1214	21.24	10.07	15.00	19.54	14		
105405-1216	23.74	11.32	17.50	22.04	16		
105405-1304	8.74	3.82	2.50	7.04	4	GOLD 0.76	
105405-1306	11.24	5.07	5.00	9.54	6		
105405-1308	13.74	6.32	7.50	12.04	8		
105405-1310	16.24	7.57	10.00	14.54	10		
105405-1312	18.74	8.82	12.50	17.04	12		
105405-1314	21.24	10.07	15.00	19.54	14		
105405-1316	23.74	11.32	17.50	22.04	16		
105405-1404	8.74	3.82	2.50	7.04	4	GOLD 0.76	YES
105405-1406	11.24	5.07	5.00	9.54	6		
105405-1408	13.74	6.32	7.50	12.04	8		
105405-1410	16.24	7.57	10.00	14.54	10		
105405-1412	18.74	8.82	12.50	17.04	12		
105405-1414	21.24	10.07	15.00	19.54	14		
105405-1416	23.74	11.32	17.50	22.04	16		

COLOR: BLACK

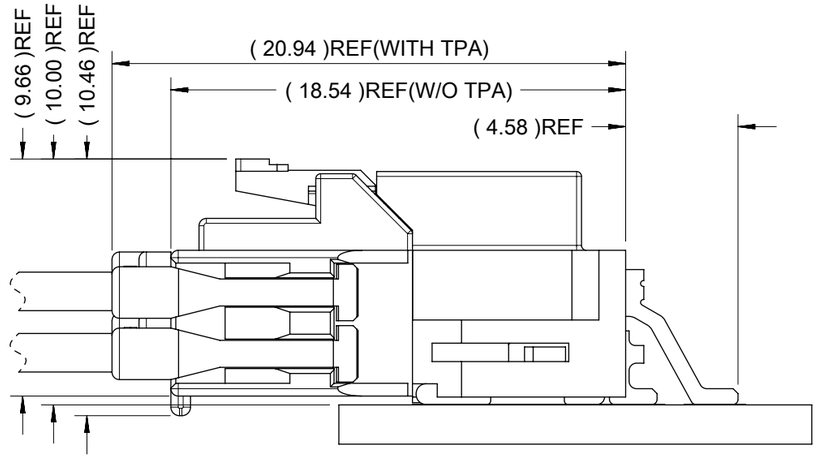

PART NUMBER	PACKING DRAWING
105405-XX04	PK-105405-001
105405-XX06	PK-105405-002
105405-XX08	PK-105405-003
105405-XX10	
105405-XX12	PK-105405-004
105405-XX14	
105405-XX16	

PART NUMBER	DIM. A	DIM. B	DIM. C	DIM. D	CKT SIZE	PLATING	LUBE
105405-2104	8.74	3.82	2.50	7.04	4	TIN	NO
105405-2106	11.24	5.07	5.00	9.54	6		
105405-2108	13.74	6.32	7.50	12.04	8		
105405-2110	16.24	7.57	10.00	14.54	10		
105405-2112	18.74	8.82	12.50	17.04	12		
105405-2114	21.24	10.07	15.00	19.54	14		
105405-2116	23.74	11.32	17.50	22.04	16		
105405-2204	8.74	3.82	2.50	7.04	4	GOLD 0.38	
105405-2206	11.24	5.07	5.00	9.54	6		
105405-2208	13.74	6.32	7.50	12.04	8		
105405-2210	16.24	7.57	10.00	14.54	10		
105405-2212	18.74	8.82	12.50	17.04	12		
105405-2214	21.24	10.07	15.00	19.54	14		
105405-2216	23.74	11.32	17.50	22.04	16		
105405-2304	8.74	3.82	2.50	7.04	4	GOLD 0.76	
105405-2306	11.24	5.07	5.00	9.54	6		
105405-2308	13.74	6.32	7.50	12.04	8		
105405-2310	16.24	7.57	10.00	14.54	10		
105405-2312	18.74	8.82	12.50	17.04	12		
105405-2314	21.24	10.07	15.00	19.54	14		
105405-2316	23.74	11.32	17.50	22.04	16		
105405-2404	8.74	3.82	2.50	7.04	4	GOLD 0.76	YES
105405-2406	11.24	5.07	5.00	9.54	6		
105405-2408	13.74	6.32	7.50	12.04	8		
105405-2410	16.24	7.57	10.00	14.54	10		
105405-2412	18.74	8.82	12.50	17.04	12		
105405-2414	21.24	10.07	15.00	19.54	14		
105405-2416	23.74	11.32	17.50	22.04	16		

COLOR: NATURAL

NOTES FOR ALL PARTS	
1> MATERIAL: HOUSING: LCP, UL 94V-0. TERMINAL: BRASS. SOLDER CLIP: BRASS. 2> PLATING FINISHED: TERMINAL: CONTACT AREA: a. REFLOWED MATTE TIN 0.76 MICRONS MIN; b. GOLD 0.38 MICRONS MIN; c. GOLD 0.76 MICRONS MIN. SOLDER AREA: TIN 0.76 MICRONS MINIMUM. UNDER PALTING NICKEL 1.25 MICRONS MINIMUM. SOLDER CLIP: TIN 2.5 MICRONS MINIMUM; UNDER PLATING NICKEL 1.25 MICRONS MINIMUM.	3> PRODUCT SPECIFICATION: PS-105405-001. 4> PACKAGE: REEL, OTHER INFORMATION REFER TO CHAT. 5> PRODUCT MATE WITH SERIES OF 105308 AND 226362(RECEPTACLE). 6> PARTS CONFORM TO CLASS 'B' REQUIREMENTS OF COSMETIC SPECIFICATION PS-45499-002.

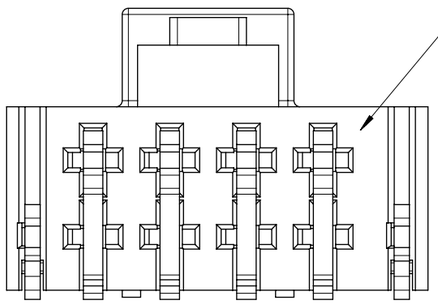

IF ANY NUMBER MARK APPEARS ON THIS SURFACE, PLEASE DISREGARD IT, IT IS NO ANY FUCTION AND NO ANY RELATION TO PIN NUMBER, IT IS JUST FOR MOLDING IDENDIFICATION.

THIS DRAWING CONTAINS INFORMATION THAT IS PROPRIETARY TO MOLEX ELECTRONIC TECHNOLOGIES, LLC AND SHOULD NOT BE USED WITHOUT WRITTEN PERMISSION

DIMENSION UNITS	SCALE
mm	NTS

GENERAL TOLERANCES (UNLESS SPECIFIED)

ANGULAR TOL	± 3.0 °
4 PLACES	±
3 PLACES	±
2 PLACES	± 0.2
1 PLACE	± 0.3
0 PLACES	±

DRAFT WHERE APPLICABLE MUST REMAIN WITHIN DIMENSIONS

CURRENT REV DESC:

EC NO: 826596
DRWN: GLLI 2025/05/23
CHK'D: XQZHANG 2025/06/26
APPR: XQZHANG 2025/06/26

INITIAL REVISION:
DRWN: WJHUO 2014/12/19
APPR: AYIN 2015/03/12

molex

SD DRAWING FOR
SMT HEADER OF NANO-FIT RA DUAL

PRODUCT CUSTOMER DRAWING

DOCUMENT NUMBER	DOC TYPE	DOC PART	REVISION
SD-105405-001	PSD	000	E1

THIRD ANGLE PROJECTION	DRAWING	SERIES	MATERIAL NUMBER	CUSTOMER	SHEET NUMBER
	A3-SIZE	105405		GENERAL MARKET	3 OF 4

DOCUMENT STATUS	P1	RELEASE DATE	2025/06/26 09:45:47

FORMAT: master-tb-prod-A3
REVISION: J1
DATE: 2021/05/01

	4 CKT	6 CKT	8 CKT	10 CKT
BLACK	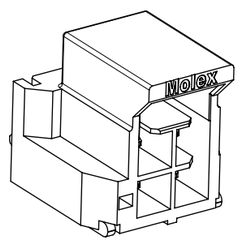	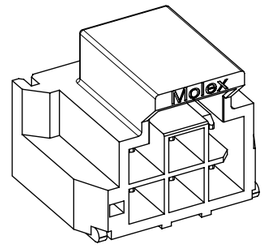	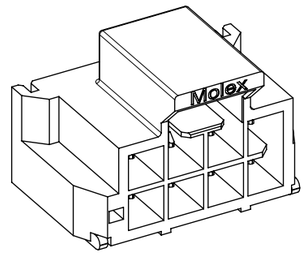	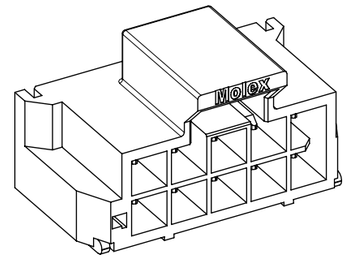
NATURAL	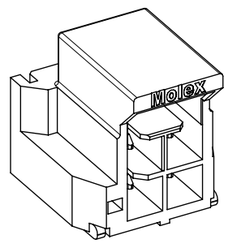	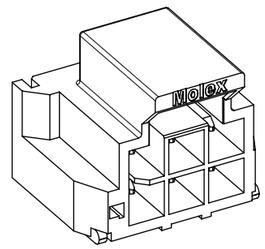	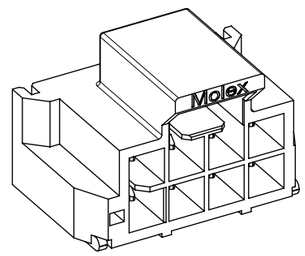	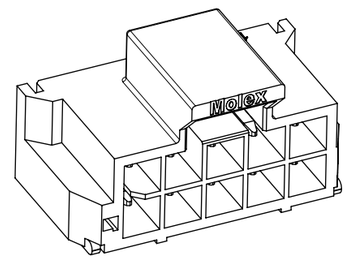

	12 CKT	14 CKT	16 CKT
BLACK	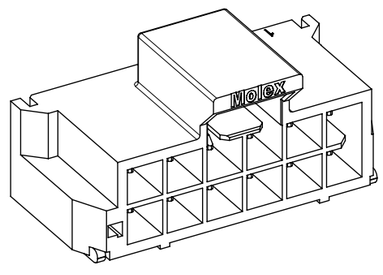	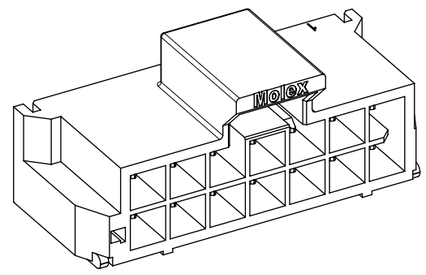	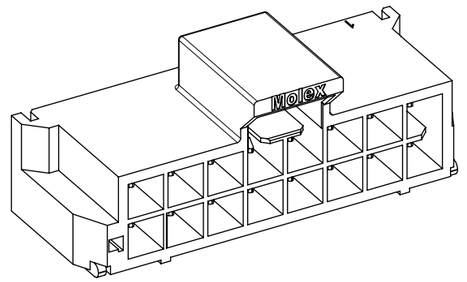
NATURAL	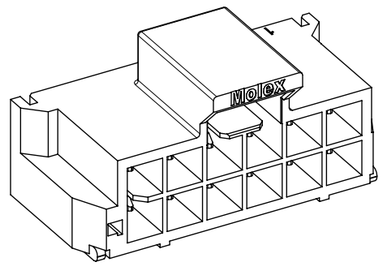	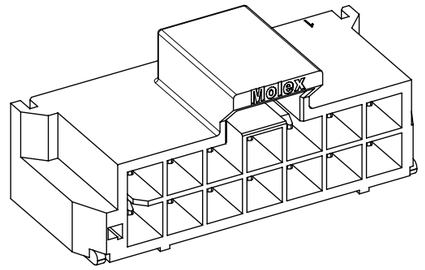	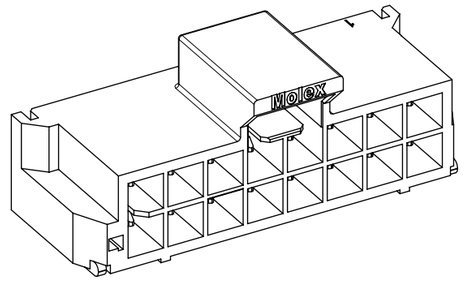

THIS DRAWING CONTAINS INFORMATION THAT IS PROPRIETARY TO MOLEX ELECTRONIC TECHNOLOGIES, LLC AND SHOULD NOT BE USED WITHOUT WRITTEN PERMISSION

DIMENSION UNITS	SCALE
mm	NTS

GENERAL TOLERANCES (UNLESS SPECIFIED)

ANGULAR TOL	± 3.0 °
4 PLACES	±
3 PLACES	±
2 PLACES	± 0.2
1 PLACE	± 0.3
0 PLACES	±

DRAFT WHERE APPLICABLE MUST REMAIN WITHIN DIMENSIONS

CURRENT REV DESC:

EC NO: 826596
DRWN: GLLI 2025/05/23
CHK'D: XQZHANG 2025/06/26
APPR: XQZHANG 2025/06/26

INITIAL REVISION:
DRWN: WJHUO 2014/12/19
APPR: AYIN 2015/03/12

molex

SD DRAWING FOR
SMT HEADER OF NANO-FIT RA DUAL

PRODUCT CUSTOMER DRAWING

DOCUMENT NUMBER	DOC TYPE	DOC PART	REVISION
SD-105405-001	PSD	000	E1

THIRD ANGLE PROJECTION	DRAWING	SERIES	MATERIAL NUMBER	CUSTOMER	SHEET NUMBER
	A3-SIZE	105405		GENERAL MARKET	4 OF 4

DOCUMENT STATUS	P1	RELEASE DATE	2025/06/26 09:45:47

FORMAT: master-tb-prod-A3
REVISION: J1
DATE: 2021/05/01