


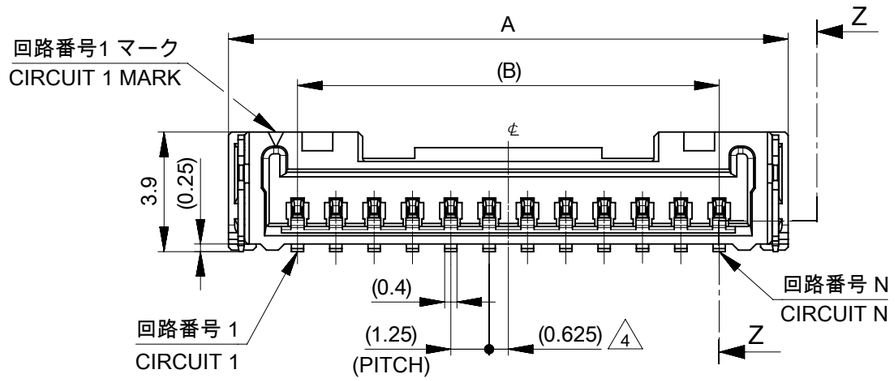


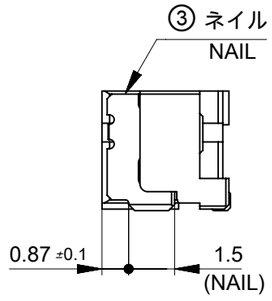


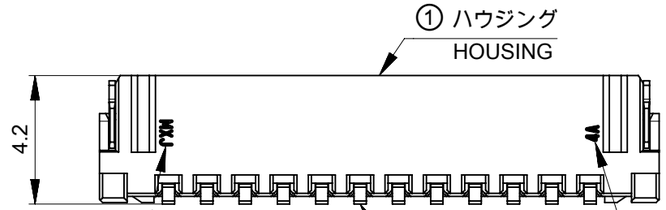





SECTION Z-Z

奇数キャビティ：キャビティ番号及び金型番号
偶数キャビティ：トレードマーク
ODD CAVITY:CAVITY AND MOLD NO.
EVEN CAVITY:TRADE MARK

奇数キャビティ：トレードマーク
偶数キャビティ：キャビティ番号及び金型番号
ODD CAVITY:TRADE MARK
EVEN CAVITY:CAVITY AND MOLD NO.

△1 TABLE 1

| 番号 NO. | 部品 PART | 材質 MATERIAL |
|---|---|---|
| ① | ハウジング HOUSING | ポリアミド(PA), ガラス充填, UL94 V-0, 色：SHEET 5参照<br>POLYAMIDE (PA), GLASS FILLED, UL94 V-0, COLOR : SEE SHEET 5 |
| ② | ターミナル TERMINAL | 黄銅<br>BRASS |
| | | 錫ビスマスめっき：1.0 MICROMETER MINIMUM<br>TIN-BISMUTH PLATING |
| | | ニッケルめっき(下地全面) : 1.0 MICROMETER MINIMUM<br>NICKEL (UNDER-PLATING OVERALL) |
| ③ | ネイル NAIL | 黄銅<br>BRASS |
| | | 錫めっき：1.0 MICROMETER MINIMUM<br>MATTE TIN PLATING |
| | | ニッケルめっき(下地全面) : 1.0 MICROMETER MINIMUM<br>NICKEL (UNDER-PLATING OVERALL) |

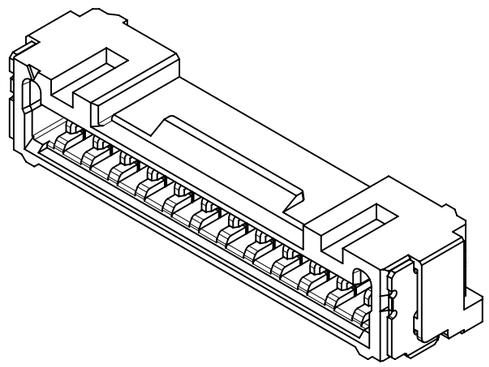

注記：
NOTES :

△1 材料及び仕上げ(めっき仕様)：TABLE 1, TABLE2 参照
MATERIAL AND FINISHES (PLATING SPECIFICATION) : SEE TABLE 1, TABLE2.

△2 製品仕様書、コネクタ取扱説明書、適合嵌合相手、適合リテーナーはSHEET 5をご参照下さい。
PLEASE REFER TO SHEET 5 FOR PRODUCT SPECIFICATION, APPLICATION SPECIFICATION, MATE WITH AND APPLICABLE RETAINER.

3. 端子テール部 及び ネイルの平坦度：0.1 MAXIMUM
TAIL AND NAIL COPLANARITY TO BE 0.1 MAXIMUM

△4 偶数極に適合
APPLY TO EVEN CIRCUIT

△5 発注番号：SHEET 5 参照
ORDER NUMBER : PLEASE REFER TO SHEET 5

505567**7*

極数 CIRCUIT SIZE

| 番号 NO. | ハウジングカラー HOUSING COLOR |
|---|---|
| 0 | ナチュラル (ベージュ) NATURAL(BEIGE) |
| 1 | 黒 BLACK |
| 2 | 赤 RED |
| 3 | 黄 YELLOW |
| 4 | 青 BLUE |
| 6 | 緑 GREEN |
| 8 | 橙 ORANGE |

| | | | |
|---|---|---|---|
| 22.2 | 18.75 | 23.25 | 16 |
| 20.95 | 17.5 | 22 | 15 |
| 19.7 | 16.25 | 20.75 | 14 |
| 18.45 | 15 | 19.5 | 13 |
| 17.2 | 13.75 | 18.25 | 12 |
| 15.95 | 12.5 | 17 | 11 |
| 14.7 | 11.25 | 15.75 | 10 |
| 13.45 | 10 | 14.5 | 9 |
| 12.2 | 8.75 | 13.25 | 8 |
| 10.95 | 7.5 | 12 | 7 |
| 9.7 | 6.25 | 10.75 | 6 |
| 8.45 | 5 | 9.5 | 5 |
| 7.2 | 3.75 | 8.25 | 4 |
| 5.95 | 2.5 | 7 | 3 |
| 4.7 | 1.25 | 5.75 | 2 |
| C | B | A | 極数 CIRCUIT SIZE |

THIS DRAWING CONTAINS INFORMATION THAT IS PROPRIETARY TO MOLEX ELECTRONIC TECHNOLOGIES, LLC AND SHOULD NOT BE USED WITHOUT WRITTEN PERMISSION

DIMENSION UNITS: mm | SCALE: NTS

GENERAL TOLERANCES (UNLESS SPECIFIED)

| | | |
|---|---|---|
| ANGULAR TOL | ± | 3.0 ° |
| 4 PLACES | ± | 0.2 |
| 3 PLACES | ± | 0.2 |
| 2 PLACES | ± | 0.2 |
| 1 PLACE | ± | 0.2 |
| 0 PLACES | ± | 0.2 |

DRAFT WHERE APPLICABLE MUST REMAIN WITHIN DIMENSIONS

CURRENT REV DESC: REMOVED OBSOLETED PART NUMBERS AS PER PCN#515932.

EC NO: 812554
DRWN: RAVINR1 2025/01/28
CHK'D: GGA 2025/02/25
APPR: GGA 2025/02/25

INITIAL REVISION:
DRWN: RWATANABE01 2017/11/24
APPR: TKANEKO 2017/12/06

THIRD ANGLE PROJECTION | DRAWING: A3-SIZE | SERIES: 505567

molex

MICRO-LOCK PLUS 1.25 W/B
SINGLE ROW RIGHT ANGLE SMT PLUG ASSEMBLY
TIN-BISMUTH PLATING

PRODUCT CUSTOMER DRAWING

| DOCUMENT NUMBER | DOC TYPE | DOC PART | REVISION |
|---|---|---|---|
| 5055670000-SD | PSD | 000 | D1 |

| MATERIAL NUMBER | CUSTOMER | SHEET NUMBER |
|---|---|---|
| SEE TABLE | GENERAL | 1 OF 5 |

| DOCUMENT STATUS | P1 | RELEASE DATE | 2025/02/25 06:03:53 |
|---|---|---|---|

FORMAT: master-tb-prod-A3
REVISION: J1
DATE: 2021/05/01

## 製品形状
## PRODUCT SHAPE

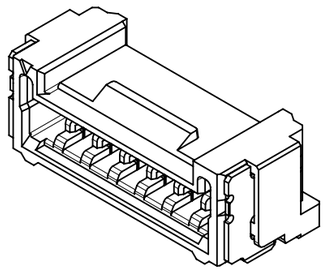

2-11極
2-11 CIRCUIT

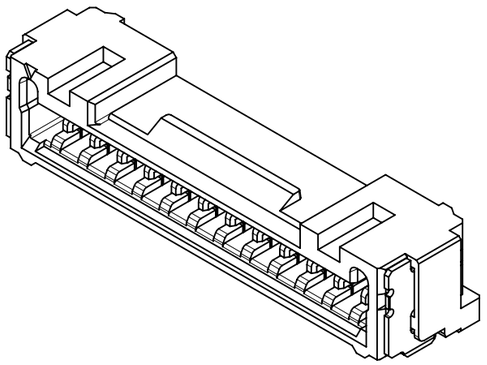

12-13極
12-13 CIRCUIT

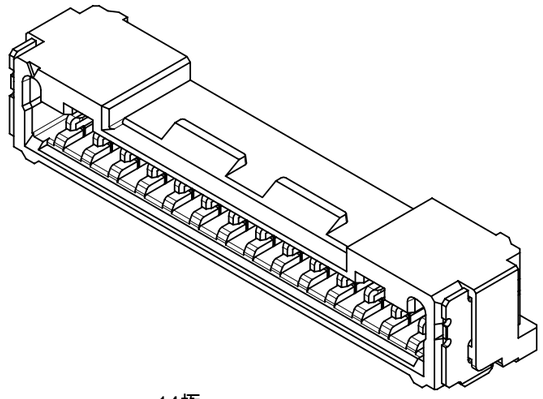

14極
14 CIRCUIT

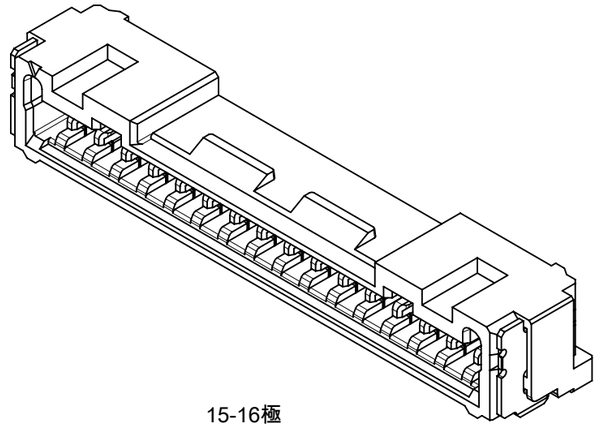

15-16極
15-16 CIRCUIT

## 基板パターンレイアウト
## PCB PATTERN LAYOUT

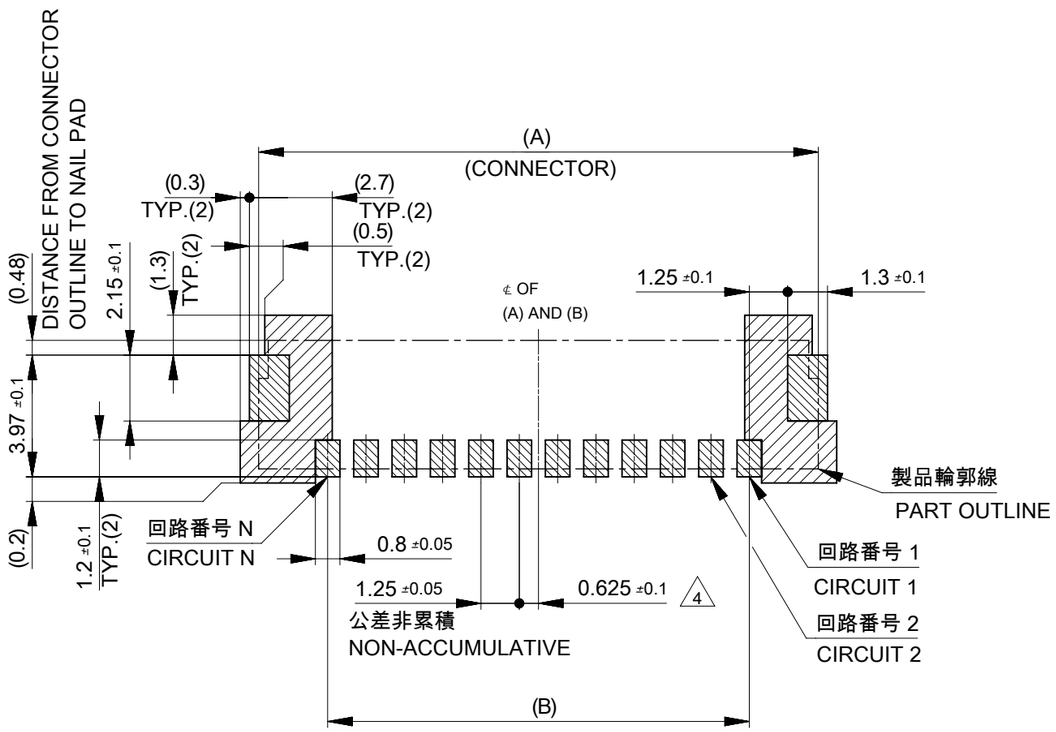


基板パターンレイアウト ( 参考 )
(参考：基板厚 1.6mm, メタルマスク厚さ 0.15mm, マスク開口率 100%)
RECOMMEND PCB LAYOUT : COMPONENT SIDE
(REFERENCE : PCB THICKNESS 1.6mm, STENCIL THICKNESS 0.15mm, APERTURE RATIO 100%)

パターン非推奨エリア
パターンを引き回す際は、製品機能に影響がないことをご確認ください。
PATTERN IS NOT RECOMMENDED ON THE HATCHING AREA
PLEASE CHECK NOT TO HAVE PROBLEM FOR PRODUCT FUNCTION
WHEN SETTING PATTERN ON THE HATCHING AREA.

THIS DRAWING CONTAINS INFORMATION THAT IS PROPRIETARY TO MOLEX ELECTRONIC TECHNOLOGIES, LLC AND SHOULD NOT BE USED WITHOUT WRITTEN PERMISSION

| DIMENSION UNITS | SCALE |
|---|---|
| mm | NTS |

GENERAL TOLERANCES (UNLESS SPECIFIED)

| | | |
|---|---|---|
| ANGULAR TOL | ± | 3.0 ° |
| 4 PLACES | ± | 0.2 |
| 3 PLACES | ± | 0.2 |
| 2 PLACES | ± | 0.2 |
| 1 PLACE | ± | 0.2 |
| 0 PLACES | ± | 0.2 |

DRAFT WHERE APPLICABLE MUST REMAIN WITHIN DIMENSIONS

CURRENT REV DESC: REMOVED OBSOLETED PART NUMBERS AS PER PCN#515932.

EC NO: 812554
DRWN: RAVINR1 2025/01/28
CHK'D: GGA 2025/02/25
APPR: GGA 2025/02/25

INITIAL REVISION:
DRWN: RWATANABE01 2017/11/24
APPR: TKANEKO 2017/12/06

THIRD ANGLE PROJECTION | DRAWING: A3-SIZE | SERIES: 505567

molex

MICRO-LOCK PLUS 1.25 W/B
SINGLE ROW RIGHT ANGLE SMT PLUG ASSEMBLY
TIN-BISMUTH PLATING

PRODUCT CUSTOMER DRAWING

| DOCUMENT NUMBER | DOC TYPE | DOC PART | REVISION |
|---|---|---|---|
| 5055670000-SD | PSD | 000 | D1 |

| MATERIAL NUMBER | CUSTOMER | SHEET NUMBER |
|---|---|---|
| SEE TABLE | GENERAL | 2 OF 5 |

| DOCUMENT STATUS | P1 | RELEASE DATE | 2025/02/25 06:03:53 |
|---|---|---|---|

FORMAT: master-tb-prod-A3
REVISION: J1
DATE: 2021/05/01

吸着エリア
SUCTION AREA

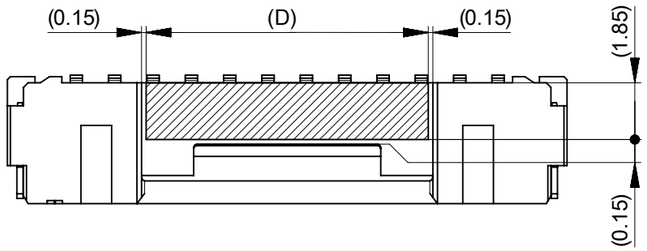


嵌合状態図
MATED CONNECTORS

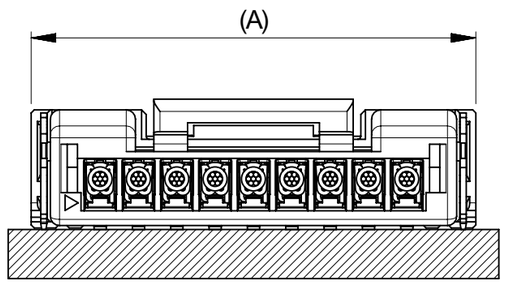


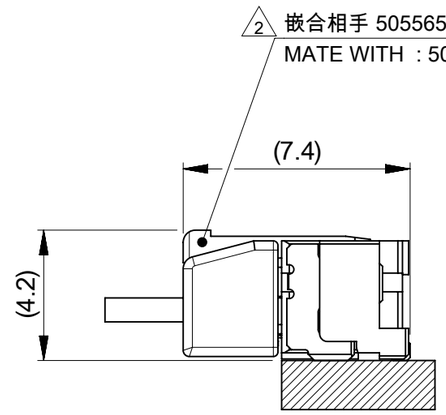


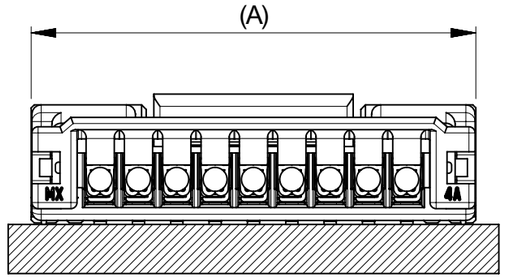


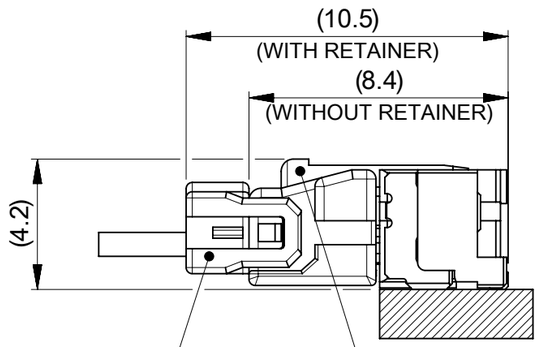


2 リテーナー : 214528 SERIES
RETAINER : 214528 SERIES

2 嵌合相手 214526シリーズ
MATE WITH : 214526 SERIES

| | |
|---|---|
| 10.7 | 16 |
| | 15 |
| | 14 |
| 9.2 | 13 |
| | 12 |
| | 11 |
| | 10 |
| 6.7 | 9 |
| | 8 |
| | 7 |
| 6.6 | 6 |
| 5.35 | 5 |
| 4.1 | 4 |
| 2.85 | 3 |
| 1.9 | 2 |
| D | 極数 CIRCUIT SIZE |

THIS DRAWING CONTAINS INFORMATION THAT IS PROPRIETARY TO MOLEX ELECTRONIC TECHNOLOGIES, LLC AND SHOULD NOT BE USED WITHOUT WRITTEN PERMISSION

| | |
|---|---|
| DIMENSION UNITS | mm |
| SCALE | NTS |
| GENERAL TOLERANCES (UNLESS SPECIFIED) | |
| ANGULAR TOL | ± 3.0 ° |
| 4 PLACES | ± 0.2 |
| 3 PLACES | ± 0.2 |
| 2 PLACES | ± 0.2 |
| 1 PLACE | ± 0.2 |
| 0 PLACES | ± 0.2 |
| DRAFT WHERE APPLICABLE MUST REMAIN WITHIN DIMENSIONS | |

CURRENT REV DESC: REMOVED OBSOLETED PART NUMBERS AS PER PCN#515932.

| | | |
|---|---|---|
| EC NO: | 812554 | |
| DRWN: | RAVINR1 | 2025/01/28 |
| CHK'D: | GGA | 2025/02/25 |
| APPR: | GGA | 2025/02/25 |
| INITIAL REVISION: | | |
| DRWN: | RWATANABE01 | 2017/11/24 |
| APPR: | TKANEKO | 2017/12/06 |

molex

MICRO-LOCK PLUS 1.25 W/B
SINGLE ROW RIGHT ANGLE SMT PLUG ASSEMBLY
TIN-BISMUTH PLATING

PRODUCT CUSTOMER DRAWING

| DOCUMENT NUMBER | DOC TYPE | DOC PART | REVISION |
|---|---|---|---|
| 5055670000-SD | PSD | 000 | D1 |

| THIRD ANGLE PROJECTION | DRAWING | SERIES | MATERIAL NUMBER | CUSTOMER | SHEET NUMBER |
|---|---|---|---|---|---|
| | A3-SIZE | 505567 | SEE TABLE | GENERAL | 3 OF 5 |

| DOCUMENT STATUS | P1 | RELEASE DATE | 2025/02/25 06:03:53 |
|---|---|---|---|

FORMAT: master-tb-prod-A3
REVISION: J1
DATE: 2021/05/01

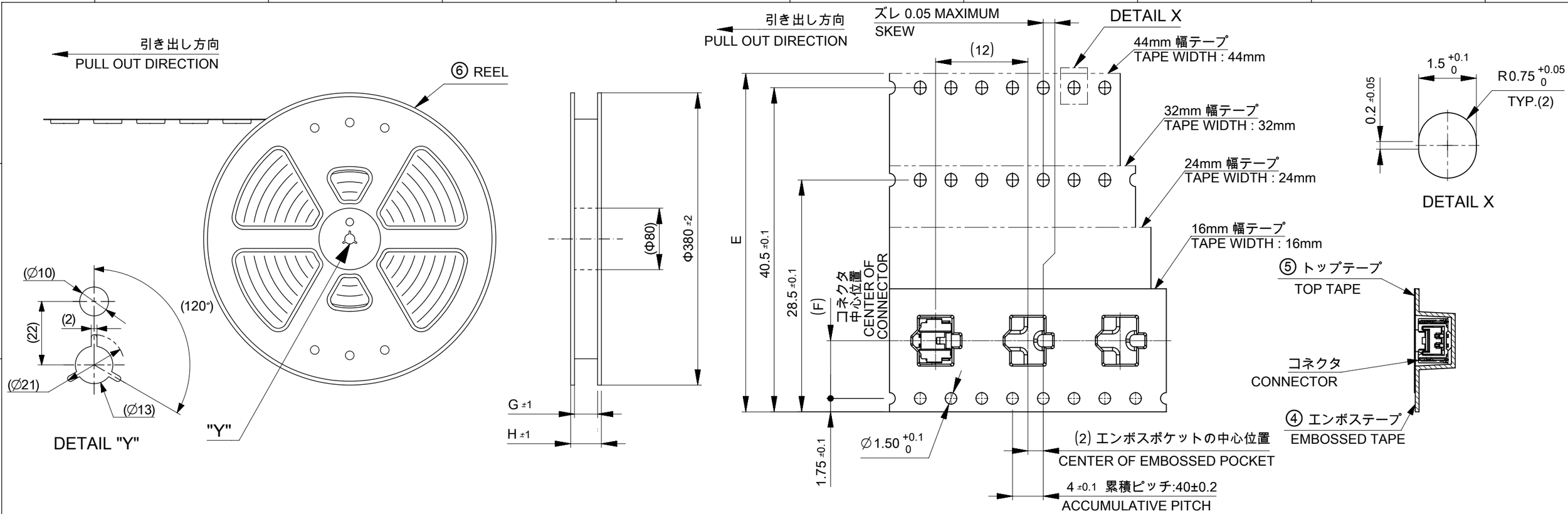


## 注記 NOTE

6. 梱包数量：1200個 / リール
   NUMBER OF CONNECTORS : 1200 PCS/REEL.
7. リードテープ長さ LEAD TAPE LENGTH.

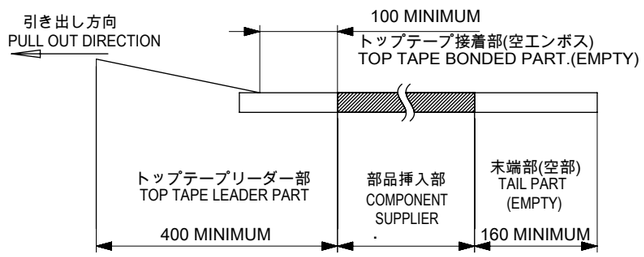


8. トップテープの剥離強度はIEC60286-3に準拠
   TOP TAPE PEELING FORCE IS DEFINED BY IEC60286-3.

| H | G | F | E | 極数 CIRCUIT SIZE |
|---|---|---|---|---|
| 49.4 | 45.4 | 20.2 | 44±0.3 | 16 |
| | | | | 15 |
| | | | | 14 |
| 37.4 | 33.4 | 14.2 | 32±0.3 | 13 |
| | | | | 12 |
| | | | | 11 |
| | | | | 10 |
| 29.4 | 25.4 | 11.5 | $24^{+0.3}_{-0.1}$ | 9 |
| | | | | 8 |
| | | | | 7 |
| | | | | 6 |
| | | | | 5 |
| | | | | 4 |
| 21.4 | 17.4 | 7.5 | $16^{+0.3}_{-0.1}$ | 3 |
| | | | | 2 |

⚠1 TABLE 2

| 番号 NO. | 部品 PART | 材質 MATERIAL |
|---|---|---|
| ④ | エンボステープ EMBOSSED TAPE | ポリスチレン(PS) POLYSTYRENE(PS) |
| ⑤ | トップテープ TOP TAPE | ポリエチレン(PE), その他 POLYETHYLENE(PE), ETC |
| ⑥ | リール REEL | ポリスチレン(PS) < リサイクル材を含む > POLYSTYRENE(PS) < RECYCLE MATERIAL CONTAINED > |

DOCUMENT STATUS | P1 | RELEASE DATE | 2025/02/25 06:03:53

THIS DRAWING CONTAINS INFORMATION THAT IS PROPRIETARY TO MOLEX ELECTRONIC TECHNOLOGIES, LLC AND SHOULD NOT BE USED WITHOUT WRITTEN PERMISSION

DIMENSION UNITS: mm | SCALE: NTS

GENERAL TOLERANCES (UNLESS SPECIFIED)

| | | |
|---|---|---|
| ANGULAR TOL | ± | 3.0 ° |
| 4 PLACES | ± | 0.2 |
| 3 PLACES | ± | 0.2 |
| 2 PLACES | ± | 0.2 |
| 1 PLACE | ± | 0.2 |
| 0 PLACES | ± | 0.2 |

DRAFT WHERE APPLICABLE MUST REMAIN WITHIN DIMENSIONS

CURRENT REV DESC: REMOVED OBSOLETED PART NUMBERS AS PER PCN#515932.

EC NO: 812554
DRWN: RAVINR1 2025/01/28
CHK'D: GGA 2025/02/25
APPR: GGA 2025/02/25

INITIAL REVISION:
DRWN: RWATANABE01 2017/11/24
APPR: TKANEKO 2017/12/06

THIRD ANGLE PROJECTION | DRAWING: A3-SIZE | SERIES: 505567

molex

MICRO-LOCK PLUS 1.25 W/B
SINGLE ROW RIGHT ANGLE SMT PLUG ASSEMBLY
TIN-BISMUTH PLATING

PRODUCT CUSTOMER DRAWING

| DOCUMENT NUMBER | DOC TYPE | DOC PART | REVISION |
|---|---|---|---|
| 5055670000-SD | PSD | 000 | D1 |

| MATERIAL NUMBER | CUSTOMER | SHEET NUMBER |
|---|---|---|
| SEE TABLE | GENERAL | 4 OF 5 |

FORMAT: master-llb-prod-A3
REVISION: J1
DATE: 2021/05/01

## △2 適合製品及び各種仕様書 APPLICABLE PRODUCTS AND VARIOUS SPECIFICATIONS

| | |
|---|---|
| 梱包仕様書<br>PACKAGING SPECIFICATION | 5055679200 PS 200 |

| | | | |
|---|---|---|---|
| 適合嵌合相手<br>MATE WITH | シリーズ番号<br>SERIES NUMBER | 505565 | 214526 |
| | リテーナー対応<br>RETAINER APPLICABLE | NOT COMPLIANT | COMPLIANT<br>(NATURAL, BLACK, RED, YELLOW, BLUE) |
| 適合リテーナーシリーズ番号<br>APPLICABLE RETAINER SERIES NUMBER | | - | 214528 |
| 製品仕様書<br>PRODUCT SPECIFICATION | | 5055650000 PS 000 | 2145260000-PS PS 000 |
| コネクタ取扱説明書<br>APPLICATION SPECIFICATION | | 5055650000-AS PS 000 | |

## △5 505567**7* 発注番号一覧 ORDER NUMBER LIST

| ORANGE | GREEN | BLUE | YELLOW | RED | BLACK | NATURAL (BEIGE) | HOUSING COLOR |
|---|---|---|---|---|---|---|---|
| ------ | ------ | 5055671674 | ------ | 5055671672 | 5055671671 | 5055671670 | 16 |
| ------ | ------ | 5055671574 | ------ | 5055671572 | 5055671571 | 5055671570 | 15 |
| ------ | ------ | 5055671474 | ------ | 5055671472 | 5055671471 | 5055671470 | 14 |
| ------ | ------ | 5055671374 | ------ | 5055671372 | 5055671371 | 5055671370 | 13 |
| ------ | ------ | 5055671274 | ------ | 5055671272 | 5055671271 | 5055671270 | 12 |
| ------ | ------ | 5055671174 | ------ | 5055671172 | 5055671171 | 5055671170 | 11 |
| ------ | ------ | 5055671074 | ------ | 5055671072 | 5055671071 | 5055671070 | 10 |
| 5055670978 | ------ | 5055670974 | ------ | 5055670972 | 5055670971 | 5055670970 | 9 |
| ------ | ------ | 5055670874 | ------ | 5055670872 | 5055670871 | 5055670870 | 8 |
| ------ | ------ | 5055670774 | ------ | 5055670772 | 5055670771 | 5055670770 | 7 |
| ------ | ------ | 5055670674 | ------ | 5055670672 | 5055670671 | 5055670670 | 6 |
| ------ | ------ | 5055670574 | ------ | 5055670572 | 5055670571 | 5055670570 | 5 |
| ------ | ------ | 5055670474 | ------ | 5055670472 | 5055670471 | 5055670470 | 4 |
| ------ | ------ | 5055670374 | ------ | 5055670372 | 5055670371 | 5055670370 | 3 |
| ------ | 5055670276 | 5055670274 | 5055670273 | 5055670272 | 5055670271 | 5055670270 | 2 |
| 発注番号：ORDER NUMBER | | | | | | | 極数<br>CIRCUIT SIZE |
| エンボステープ梱包<br>PACKAGING STYLE: EMBOSSED TAPE AND REEL | | | | | | | |

THIS DRAWING CONTAINS INFORMATION THAT IS PROPRIETARY TO MOLEX ELECTRONIC TECHNOLOGIES, LLC AND SHOULD NOT BE USED WITHOUT WRITTEN PERMISSION

| | |
|---|---|
| DIMENSION UNITS | mm |
| SCALE | NTS |
| GENERAL TOLERANCES (UNLESS SPECIFIED) | |
| ANGULAR TOL | ± 3.0 ° |
| 4 PLACES | ± 0.2 |
| 3 PLACES | ± 0.2 |
| 2 PLACES | ± 0.2 |
| 1 PLACE | ± 0.2 |
| 0 PLACES | ± 0.2 |
| DRAFT WHERE APPLICABLE MUST REMAIN WITHIN DIMENSIONS | |

CURRENT REV DESC: REMOVED OBSOLETED PART NUMBERS AS PER PCN#515932.

EC NO: 812554
DRWN: RAVINR1 2025/01/28
CHK'D: GGA 2025/02/25
APPR: GGA 2025/02/25

INITIAL REVISION:
DRWN: RWATANABE01 2017/11/24
APPR: TKANEKO 2017/12/06

molex

MICRO-LOCK PLUS 1.25 W/B
SINGLE ROW RIGHT ANGLE SMT PLUG ASSEMBLY
TIN-BISMUTH PLATING

PRODUCT CUSTOMER DRAWING

| DOCUMENT NUMBER | DOC TYPE | DOC PART | REVISION |
|---|---|---|---|
| 5055670000-SD | PSD | 000 | D1 |

| THIRD ANGLE PROJECTION | DRAWING | SERIES | MATERIAL NUMBER | CUSTOMER | SHEET NUMBER |
|---|---|---|---|---|---|
| | A3-SIZE | 505567 | SEE TABLE | GENERAL | 5 OF 5 |

| DOCUMENT STATUS | P1 | RELEASE DATE | 2025/02/25 06:03:53 |
|---|---|---|---|

FORMAT: master-lb-prod-A3
REVISION: J1
DATE: 2021/05/01