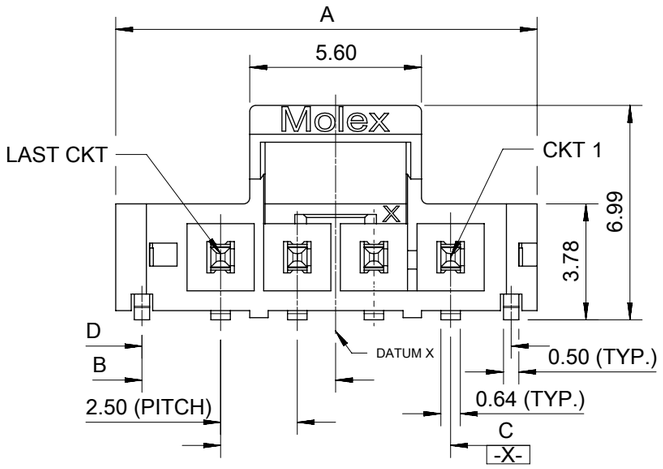

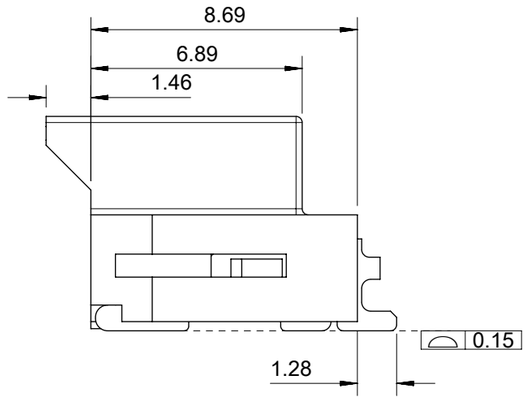

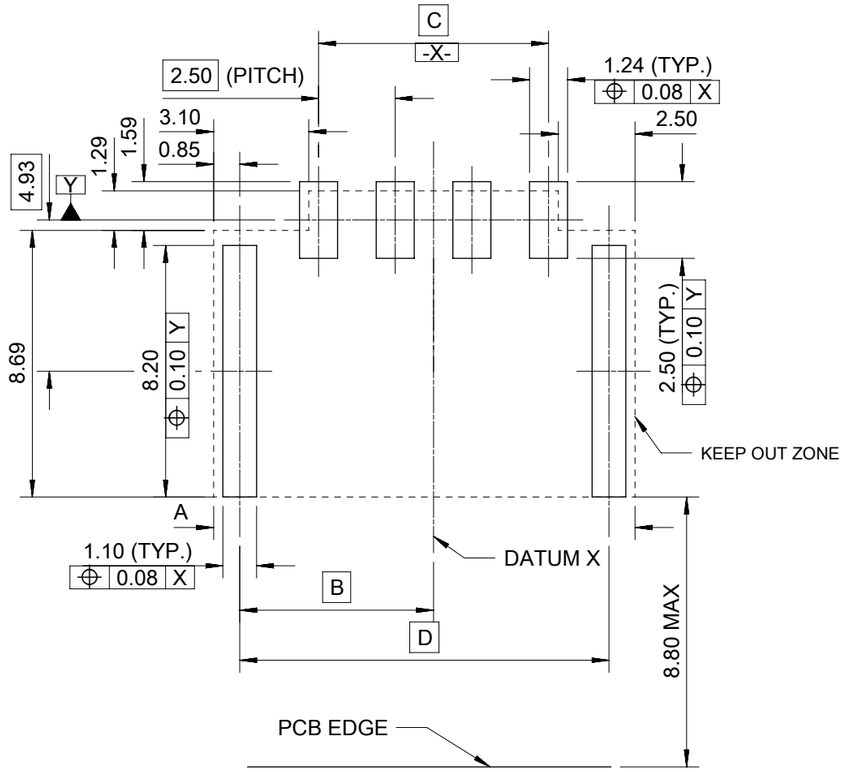

RECOMMENDED PCB LAYOUT(CONNECTOR SIDE VIEW)
THICKNESS=1.60mm MIN. TOLERANCE:±0.05

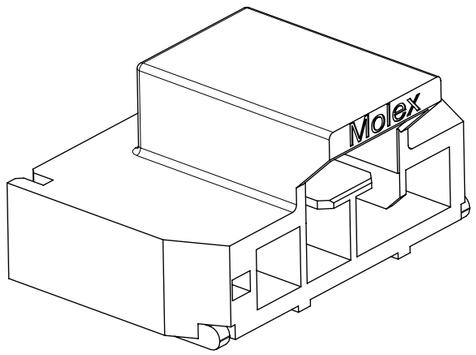

THIS DRAWING CONTAINS INFORMATION THAT IS PROPRIETARY TO MOLEX ELECTRONIC TECHNOLOGIES, LLC AND SHOULD NOT BE USED WITHOUT WRITTEN PERMISSION

DIMENSION UNITS	SCALE
mm	NTS

GENERAL TOLERANCES (UNLESS SPECIFIED)

ANGULAR TOL	±	3.0 °
4 PLACES	±	
3 PLACES	±	
2 PLACES	±	0.2
1 PLACE	±	0.3
0 PLACES	±	

DRAFT WHERE APPLICABLE MUST REMAIN WITHIN DIMENSIONS

CURRENT REV DESC:

EC NO: 826596
DRWN: GLLI 2025/05/23
CHK'D: XQZHANG 2025/06/26
APPR: XQZHANG 2025/06/26

INITIAL REVISION:
DRWN: WJHUO 2014/12/17
APPR: AYIN 2015/03/12

molex

SD DRAWING FOR
NANO-FIT HEADER OF SMT RA SINGLE POWER CONN.

PRODUCT CUSTOMER DRAWING

DOCUMENT NUMBER	DOC TYPE	DOC PART	REVISION
SD-105430-001	PSD	000	E1

THIRD ANGLE PROJECTION	DRAWING	SERIES	MATERIAL NUMBER	CUSTOMER	SHEET NUMBER
	A3-SIZE	105430		GENERAL MARKET	1 OF 4

DOCUMENT STATUS	P1	RELEASE DATE	2025/06/26 09:45:53

FORMAT: master-tb-prod-A3
REVISION: J1
DATE: 2021/05/01

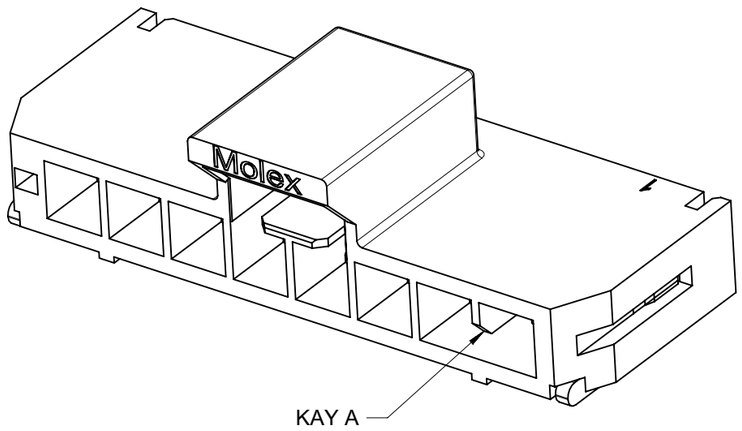

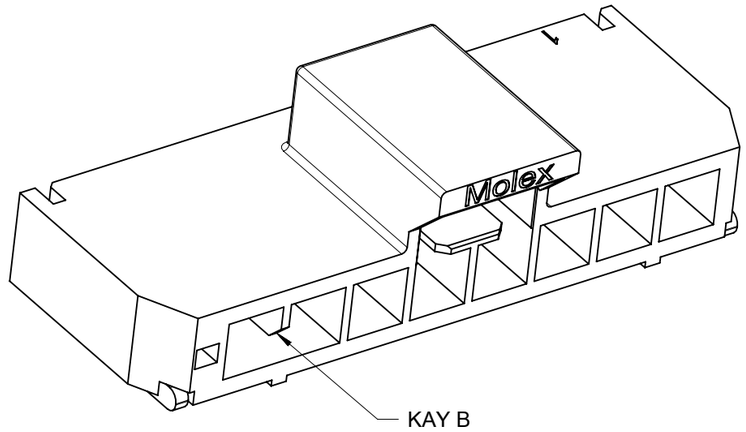

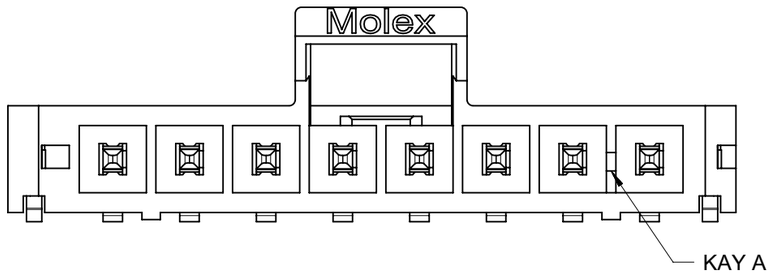

BLACK

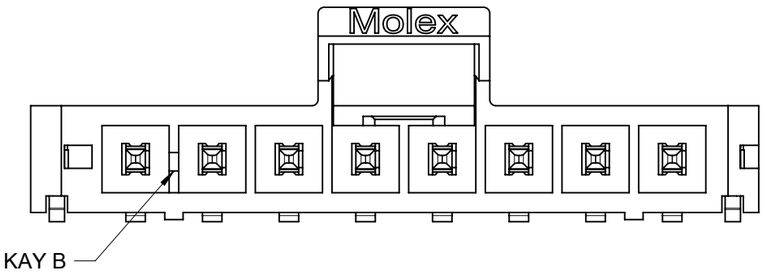

NATURAL

COLOR OPTION

THIS DRAWING CONTAINS INFORMATION THAT IS PROPRIETARY TO MOLEX ELECTRONIC TECHNOLOGIES, LLC AND SHOULD NOT BE USED WITHOUT WRITTEN PERMISSION

DIMENSION UNITS	SCALE
mm	NTS

GENERAL TOLERANCES (UNLESS SPECIFIED)

ANGULAR TOL	±	3.0 °
4 PLACES	±	
3 PLACES	±	
2 PLACES	±	0.2
1 PLACE	±	0.3
0 PLACES	±	

DRAFT WHERE APPLICABLE MUST REMAIN WITHIN DIMENSIONS

CURRENT REV DESC:

EC NO: 826596

DRWN:	GLLI	2025/05/23
CHK'D:	XQZHANG	2025/06/26
APPR:	XQZHANG	2025/06/26

INITIAL REVISION:

DRWN:	WJHUO	2014/12/17
APPR:	AYIN	2015/03/12

THIRD ANGLE PROJECTION | DRAWING: A3-SIZE | SERIES: 105430

molex

SD DRAWING FOR
NANO-FIT HEADER OF SMT RA SINGLE POWER CONN.

PRODUCT CUSTOMER DRAWING

DOCUMENT NUMBER	DOC TYPE	DOC PART	REVISION
SD-105430-001	PSD	000	E1

MATERIAL NUMBER	CUSTOMER	SHEET NUMBER
	GENERAL MARKET	2 OF 4

DOCUMENT STATUS	P1	RELEASE DATE	2025/06/26 09:45:53

FORMAT: master-lb-prod-A3
REVISION: J1
DATE: 2021/05/01

PART NUMBER	DIM. A	DIM. B	DIM. C	DIM. D	CKT SIZE	PLATING	LUBE
105430-1102	8.74	3.82	2.50	7.04	2	TIN	NO
105430-1103	11.24	5.07	5.00	9.54	3		
105430-1104	13.74	6.32	7.50	12.04	4		
105430-1105	16.24	7.57	10.00	14.54	5		
105430-1106	18.74	8.82	12.50	17.04	6		
105430-1107	21.24	10.07	15.00	19.54	7		
105430-1108	23.74	11.32	17.50	22.04	8		
105430-1202	8.74	3.82	2.50	7.04	2	GOLD 0.38	
105430-1203	11.24	5.07	5.00	9.54	3		
105430-1204	13.74	6.32	7.50	12.04	4		
105430-1205	16.24	7.57	10.00	14.54	5		
105430-1206	18.74	8.82	12.50	17.04	6		
105430-1207	21.24	10.07	15.00	19.54	7		
105430-1208	23.74	11.32	17.50	22.04	8		
105430-1302	8.74	3.82	2.50	7.04	2	GOLD 0.76	
105430-1303	11.24	5.07	5.00	9.54	3		
105430-1304	13.74	6.32	7.50	12.04	4		
105430-1305	16.24	7.57	10.00	14.54	5		
105430-1306	18.74	8.82	12.50	17.04	6		
105430-1307	21.24	10.07	15.00	19.54	7		
105430-1308	23.74	11.32	17.50	22.04	8		
105430-1402	8.74	3.82	2.50	7.04	2	GOLD 0.76	YES
105430-1403	11.24	5.07	5.00	9.54	3		
105430-1404	13.74	6.32	7.50	12.04	4		
105430-1405	16.24	7.57	10.00	14.54	5		
105430-1406	18.74	8.82	12.50	17.04	6		
105430-1407	21.24	10.07	15.00	19.54	7		
105430-1408	23.74	11.32	17.50	22.04	8		

COLOR: BLACK

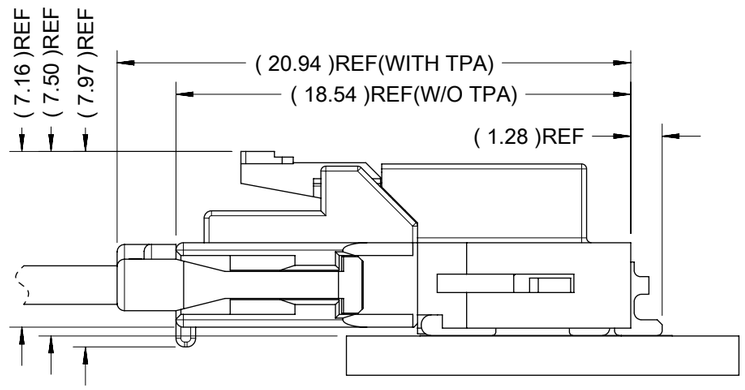

PART NUMBER	DIM. A	DIM. B	DIM. C	DIM. D	CKT SIZE	PLATING	LUBE
105430-2102	8.74	3.82	2.50	7.04	2	TIN	NO
105430-2103	11.24	5.07	5.00	9.54	3		
105430-2104	13.74	6.32	7.50	12.04	4		
105430-2105	16.24	7.57	10.00	14.54	5		
105430-2106	18.74	8.82	12.50	17.04	6		
105430-2107	21.24	10.07	15.00	19.54	7		
105430-2108	23.74	11.32	17.50	22.04	8		
105430-2202	8.74	3.82	2.50	7.04	2	GOLD 0.38	
105430-2203	11.24	5.07	5.00	9.54	3		
105430-2204	13.74	6.32	7.50	12.04	4		
105430-2205	16.24	7.57	10.00	14.54	5		
105430-2206	18.74	8.82	12.50	17.04	6		
105430-2207	21.24	10.07	15.00	19.54	7		
105430-2208	23.74	11.32	17.50	22.04	8		
105430-2302	8.74	3.82	2.50	7.04	2	GOLD 0.76	
105430-2303	11.24	5.07	5.00	9.54	3		
105430-2304	13.74	6.32	7.50	12.04	4		
105430-2305	16.24	7.57	10.00	14.54	5		
105430-2306	18.74	8.82	12.50	17.04	6		
105430-2307	21.24	10.07	15.00	19.54	7		
105430-2308	23.74	11.32	17.50	22.04	8		
105430-2402	8.74	3.82	2.50	7.04	2	GOLD 0.76	YES
105430-2403	11.24	5.07	5.00	9.54	3		
105430-2404	13.74	6.32	7.50	12.04	4		
105430-2405	16.24	7.57	10.00	14.54	5		
105430-2406	18.74	8.82	12.50	17.04	6		
105430-2407	21.24	10.07	15.00	19.54	7		
105430-2408	23.74	11.32	17.50	22.04	8		

COLOR: NATURAL

NOTES FOR ALL PARTS

1> MATERIAL:
HOUSING: LCP, UL 94V-0.
TERMINAL: BRASS.
SOLDER CLIP: BRASS.
2> PLATING FINISHED:
TERMINAL:
CONTACT AREA:
a. REFLOWED MATTE TIN 0.76 MICRONS MIN; b. GOLD 0.38 MICRONS MIN; c. GOLD 0.76 MICRONS MIN.
SOLDER AREA: TIN 0.76 MICRONS MINIMUM.
UNDER PALTING NICKEL 1.25 MICRONS MINIMUM.
SOLDER CLIP: TIN 2.5 MICRONS MINIMUM; UNDER PLATING NICKEL 1.25 MICRONS MINIMUM.

3> PRODUCT SPECIFICATION: PS-105405-001.
4> PACKAGE: TAPE REEL, DETAILS REFER TO DRAWING 1054301000-PK.
5> PRODUCT MATE WITH SERIES OF 105307 AND 226354(RECEPTACLE).
6> PARTS CONFORM TO CLASS 'B' REQUIREMENTS OF COSMETIC SPECIFICATION PS-45499-002.

THIS DRAWING CONTAINS INFORMATION THAT IS PROPRIETARY TO MOLEX ELECTRONIC TECHNOLOGIES, LLC AND SHOULD NOT BE USED WITHOUT WRITTEN PERMISSION

DIMENSION UNITS	SCALE
mm	NTS

GENERAL TOLERANCES (UNLESS SPECIFIED)

ANGULAR TOL	± 3.0 °
4 PLACES	±
3 PLACES	±
2 PLACES	± 0.2
1 PLACE	± 0.3
0 PLACES	±

DRAFT WHERE APPLICABLE MUST REMAIN WITHIN DIMENSIONS

CURRENT REV DESC:

EC NO: 826596
DRWN: GLLI 2025/05/23
CHK'D: XQZHANG 2025/06/26
APPR: XQZHANG 2025/06/26

INITIAL REVISION:
DRWN: WJHUO 2014/12/17
APPR: AYIN 2015/03/12

molex

SD DRAWING FOR NANO-FIT HEADER OF SMT RA SINGLE POWER CONN.

PRODUCT CUSTOMER DRAWING

DOCUMENT NUMBER	DOC TYPE	DOC PART	REVISION
SD-105430-001	PSD	000	E1

THIRD ANGLE PROJECTION	DRAWING	SERIES	MATERIAL NUMBER	CUSTOMER	SHEET NUMBER
	A3-SIZE	105430		GENERAL MARKET	3 OF 4

DOCUMENT STATUS	P1	RELEASE DATE	2025/06/26 09:45:53

FORMAT: master-tb-prod-A3
REVISION: J1
DATE: 2021/05/01

	2 CKT	3 CKT	4 CKT	5 CKT
BLACK	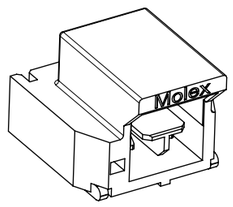	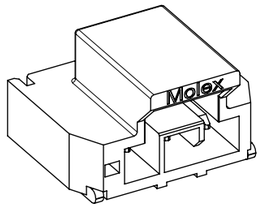	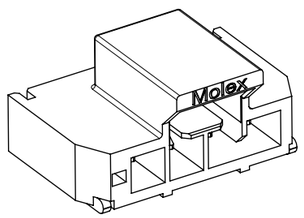	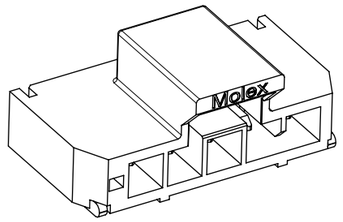
NATURAL	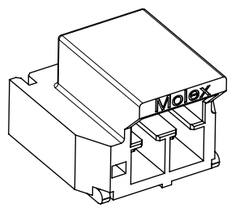	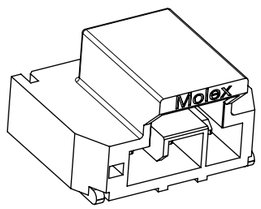	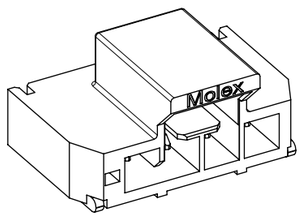	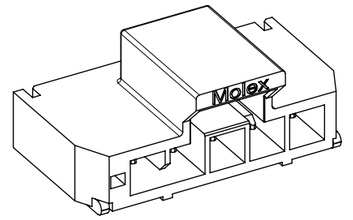

	6 CKT	7 CKT	8 CKT
BLACK	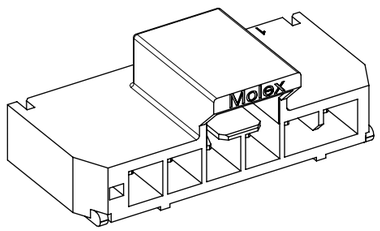	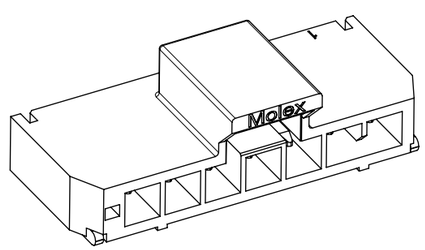	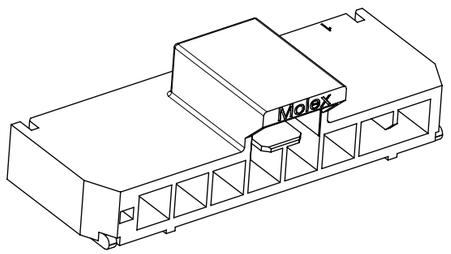
NATURAL	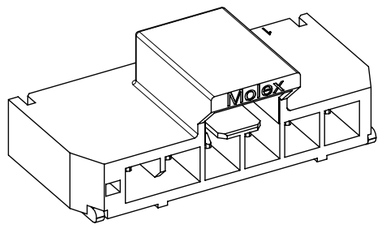	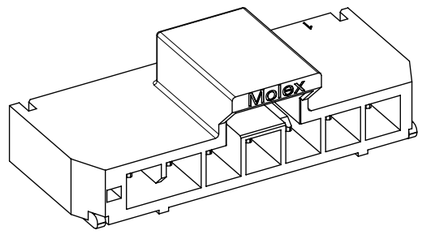	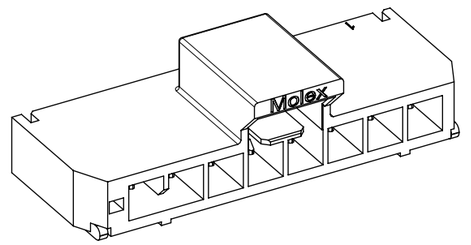

THIS DRAWING CONTAINS INFORMATION THAT IS PROPRIETARY TO MOLEX ELECTRONIC TECHNOLOGIES, LLC AND SHOULD NOT BE USED WITHOUT WRITTEN PERMISSION

DIMENSION UNITS	SCALE
mm	NTS

GENERAL TOLERANCES (UNLESS SPECIFIED)

ANGULAR TOL	±	3.0 °
4 PLACES	±	
3 PLACES	±	
2 PLACES	±	0.2
1 PLACE	±	0.3
0 PLACES	±	

DRAFT WHERE APPLICABLE MUST REMAIN WITHIN DIMENSIONS

CURRENT REV DESC:

EC NO: 826596
DRWN: GLLI 2025/05/23
CHK'D: XQZHANG 2025/06/26
APPR: XQZHANG 2025/06/26

INITIAL REVISION:
DRWN: WJHUO 2014/12/17
APPR: AYIN 2015/03/12

THIRD ANGLE PROJECTION | DRAWING: A3-SIZE | SERIES: 105430

molex

SD DRAWING FOR
NANO-FIT HEADER OF SMT RA SINGLE POWER CONN.

PRODUCT CUSTOMER DRAWING

DOCUMENT NUMBER	DOC TYPE	DOC PART	REVISION
SD-105430-001	PSD	000	E1

MATERIAL NUMBER	CUSTOMER	SHEET NUMBER
	GENERAL MARKET	4 OF 4

DOCUMENT STATUS	P1	RELEASE DATE	2025/06/26 09:45:53

FORMAT: master-lb-prod-A3
REVISION: J1
DATE: 2021/05/01