NO. CKTS	DIM. A	DIM. B
2	5.08 .200	2.54 .100
3	7.62 .300	5.08 .200
4	10.16 .400	7.62 .300
5	12.70 .500	10.16 .400
6	15.24 .600	12.70 .500
7	17.78 .700	15.24 .600
8	20.32 .800	17.78 .700
9	22.86 .900	20.32 .800
10	25.40 1.000	22.86 .900
11	27.94 1.100	25.40 1.000
12	30.48 1.200	27.94 1.100
13	33.02 1.300	30.48 1.200
14	35.56 1.400	33.02 1.300
15	38.10 1.500	35.56 1.400
16	40.64 1.600	38.10 1.500
17	43.18 1.700	40.64 1.600
18	45.72 1.800	43.18 1.700
19	48.26 1.900	45.72 1.800
20	50.80 2.000	48.26 1.900
21	53.34 2.100	50.80 2.000
22	55.88 2.200	53.34 2.100
23	58.42 2.300	55.88 2.200
24	60.96 2.400	58.42 2.300
25	63.50 2.500	60.96 2.400
26	66.04 2.600	63.50 2.500
27	68.58 2.700	66.04 2.600
28	71.12 2.800	68.58 2.700
29	73.66 2.900	71.12 2.800
30	76.20 3.000	73.66 2.900
31	78.74 3.100	76.20 3.000
32	81.28 3.200	78.74 3.100
33	83.82 3.300	81.28 3.200
34	86.36 3.400	83.82 3.300
35	88.90 3.500	86.36 3.400
36	91.44 3.600	88.90 3.500

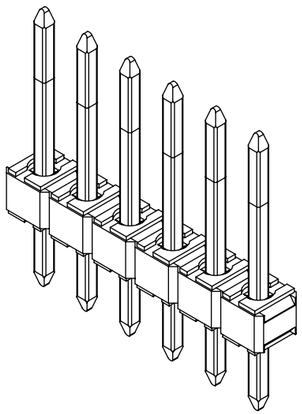

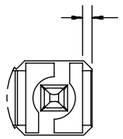

IRREGULARITIES OR BURRS ALLOWED IN THIS AREA, BOTH ENDS.

DETAIL Z

SCALE 5:1

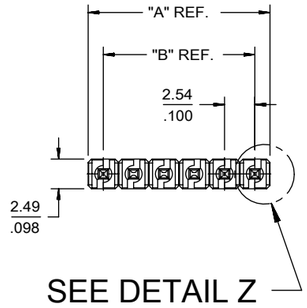

SEE DETAIL Z

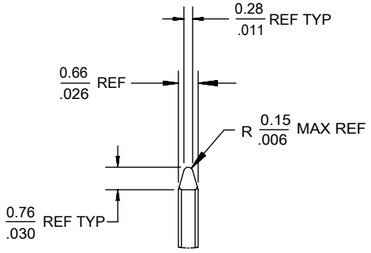

DETAIL Y

SCALE 5:1

SEE NOTE 10

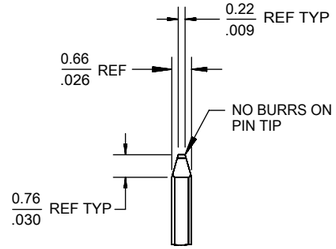

DETAIL X

SCALE 5:1

SEE NOTE 10

1.3 .05 CENTERLINE OF PIN IN AREA SHOWN NOT TO VARY FROM CENTERLINE OF PIN AT DATUM -D- BY MORE THAN
(FOR DIM. X OF 12.70/.500 OR LESS) 0.20/.008 IN ANY DIRECTION.
(FOR DIM. X OF 12.73/.501 OR MORE) 0.30/.012 IN ANY DIRECTION

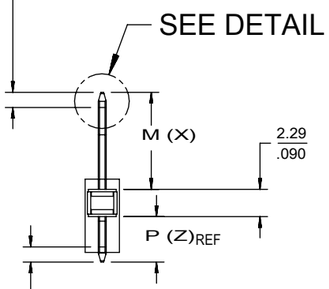

1.3 .05 CENTERLINE OF PIN IN AREA SHOWN NOT TO VARY FROM CENTERLINE OF PIN AT DATUM -E- BY MORE THAN 0.13/.005 IN ANY DIRECTION.

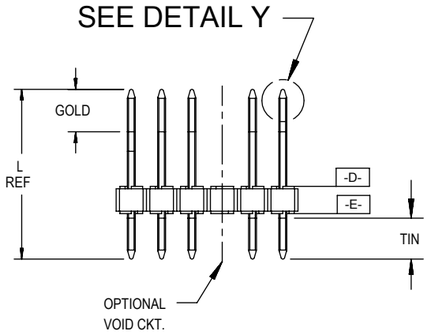



OPTIONAL KINK PIN

SEE NOTE 6

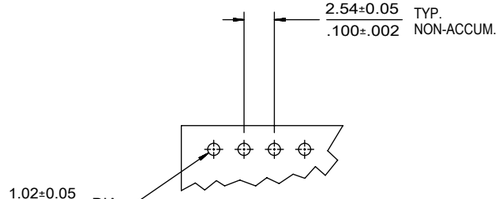

HOLE TYP.
SEE NOTE 6

TYP. HOLE PATTERN FOR 1.57/.062 THK. PCB

NOTES:
1. MATERIAL: GLASS FILLED NYLON
   U.L. 94V-0, COLOR: BLACK
2. FINISH: (SEE LAST 3 DIGITS OF PIN NUMBER)
   (154) OVERALL TIN: 0.00254/.000100 MIN. OVER NICKEL: 0.00127/.000050 MIN.
   (118) OVERALL TIN: 0.00152/.000060 MIN. OVER NICKEL: 0.00127/.000050 MIN.
   (208) SELECT GOLD: 0.00038/.000015 MIN, SELECT TIN: 0.00254/.000100 MIN, WITH OVERALL NICKEL UNDERPLATE: 0.00127/.000050 MIN.
   (228) SELECT GOLD: 0.00076/.000030 MIN, SELECT TIN: 0.00254/.000100 MIN, WITH OVERALL NICKEL UNDERPLATE: 0.00127/.000050 MIN.
3. PRODUCT SPECIFICATION PS-10-07.
4. PACKAGING INFORMATION: SEE TABLES
5. SOLDERABILITY PER SMES-152.
6. KINK PIN OPTION NOT RECOMMENDED FOR 2 CIRCUIT PARTS. HOLE SIZE MAY NEED TO BE ADJUSTED FOR 2 CIRCUIT PARTS WITH KINK OPTION FOR PROPER INSERTION INTO THE PCB. SEE SMES-42003 FOR ADDITIONAL INFORMATION ON KINK PIN DIRECTION AND PLACEMENT.
7. HEADERS ARE NOT STACKABLE ON 2.54/.100 CENTERS.
8. PIN PUSH OUT FORCE: 3 LBS. MIN
9. THIS PART CONFORMS TO CLASS B REQUIREMENTS OF COSMETIC SPECIFICATION PS-45499-002.
10. PIN TIP DIMENSIONS ARE SHOWN FOR REFERENCE ONLY. DIMENSIONS APPLY PRIOR TO PLATING OR ASSEMBLY.
11. TEXT ON PART IS FOR REFERENCE ONLY. TEXT AND TEXT LOCATION MAY VARY DEPENDING ON PART NUMBER AND/OR TOOL.

SYMBOLS
E = 0
F = 0
G = 0
S = 0
▼ = 0
V = 0
☒ = 0
■ = 0
▽ = 0

THIS DRAWING CONTAINS INFORMATION THAT IS PROPRIETARY TO MOLEX ELECTRONIC TECHNOLOGIES, LLC AND SHOULD NOT BE USED WITHOUT WRITTEN PERMISSION

DIMENSION UNITS: MM/IN
SCALE: 2:1

GENERAL TOLERANCES (UNLESS SPECIFIED)

	MM	INCH
4 PLACES	±	±
3 PLACES	±	± 0.01
2 PLACES	± 0.25	±
1 PLACE	± 0.38	±
0 PLACES	±	±
ANGULAR TOL	± 0.5 °	

DRAFT WHERE APPLICABLE MUST REMAIN WITHIN DIMENSIONS

CURRENT REV DESC: GOLD LENGTH SPEC CHANGED AS MIN 2.54- MAX 5.54 FOR A-42375-0037/0071

EC NO: 689596
DRWN: SHRUTJ 2021/09/14
CHK'D: SHRUTJ 2021/12/20
APPR: ISHWARG 2021/12/20

INITIAL REVISION:
DRWN: SCHAFER 2003/02/11
APPR: MARGULIS 2004/02/27

THIRD ANGLE PROJECTION | DRAWING: B-SIZE | SERIES: 42375

molex

KK 100 HEADER ASSY
FLAT VERTICAL BREAKAWAY

PRODUCT CUSTOMER DRAWING

DOCUMENT NUMBER	DOC TYPE	DOC PART	REVISION
SD-42375-001	PSD	001	V

MATERIAL NUMBER	CUSTOMER	SHEET NUMBER
SEE CHART	GENERAL MARKET	1 OF 35

DOCUMENT STATUS	P1	RELEASE DATE	2021/12/20 12:18:33

FORMAT: Eng-lega-master-tb-prod-B
REVISION: D
DATE: 2018/01/18

ENG. NO: A-42375-0002/0036					
HEADER NUMBER:			42312-0036		
PIN NUMBER:			42663-ABA154		
PIN LENGTH: L			.455 / 11.56		
MATING LENGTH: M			.240 / 6.09		
GOLD POINT: G			N/A		
PC TAIL LENGTH: P			.125 / 3.18		
TIN: T			OVERALL		
CKTS:			2-36		
KINKS:			NO		
VOIDED CKTS:			NONE		
PACKAGING:			BULK PK-40873-0041		
CKTS	MATERIAL NUMBER	ENG NUMBER	CKTS	MATERIAL NUMBER	ENG MATERIAL
2	22-28-4020	A-42375-0002	20	22-28-4200	22-28-4200
3	22-28-4030	A-42375-0003	21	22-28-4210	22-28-4210
4	22-28-4040	A-42375-0004	22	22-28-4220	22-28-4220
5	22-28-4050	A-42375-0005	23	22-28-4230	22-28-4230
6	22-28-4060	A-42375-0006	24	22-28-4240	22-28-4240
7	22-28-4070	A-42375-0007	25	22-28-4250	22-28-4250
8	22-28-4080	A-42375-0008	26	22-28-4260	22-28-4260
9	22-28-4090	A-42375-0009	27	22-28-4270	22-28-4270
10	22-28-4100	A-42375-0010	28	22-28-4280	22-28-4280
11	22-28-4110	A-42375-0011	29	22-28-4290	22-28-4290
12	22-28-4120	A-42375-0012	30	22-28-4300	22-28-4300
13	22-28-4130	A-42375-0013	31	22-28-4310	22-28-4310
14	22-28-4140	A-42375-0014	32	22-28-4320	22-28-4320
15	22-28-4150	A-42375-0015	33	22-28-4330	22-28-4330
16	22-28-4160	A-42375-0016	34	22-28-4340	22-28-4340
17	22-28-4170	A-42375-0017	35	22-28-4350	22-28-4350
18	22-28-4180	A-42375-0018	36	22-28-4360	22-28-4360
19	22-28-4190	A-42375-0019			

ENG. NO: A-42375-0037/0071					
HEADER NUMBER:			42312-0036		
PIN NUMBER:			42663-ABB208		
PIN LENGTH: L			.455 / 11.56		
MATING LENGTH: M			.240 / 6.09		
GOLD POINT: G			.100 / 2.54 Min - 0.218/5.54 Max		
PC TAIL LENGTH: P			.125 / 3.18		
TIN: T			.100 / 2.54		
CKTS:			2-36		
KINKS:			NO		
VOIDED CKTS:			NONE		
PACKAGING:			BULK PK-40873-0041		
CKTS	MATERIAL NUMBER	ENG NUMBER	CKTS	MATERIAL NUMBER	ENG MATERIAL
2	22-28-4023	A-42375-0037	20	22-28-4203	A-42375-0055
3	22-28-4033	A-42375-0038	21	22-28-4213	A-42375-0056
4	22-28-4043	A-42375-0039	22	22-28-4223	A-42375-0057
5	22-28-4053	A-42375-0040	23	22-28-4233	A-42375-0058
6	22-28-4063	A-42375-0041	24	22-28-4243	A-42375-0059
7	22-28-4073	A-42375-0042	25	22-28-4253	A-42375-0060
8	22-28-4083	A-42375-0043	26	22-28-4263	A-42375-0061
9	22-28-4093	A-42375-0044	27	22-28-4273	A-42375-0062
10	22-28-4103	A-42375-0045	28	22-28-4283	A-42375-0063
11	22-28-4113	A-42375-0046	29	22-28-4293	A-42375-0064
12	22-28-4123	A-42375-0047	30	22-28-4303	A-42375-0065
13	22-28-4133	A-42375-0048	31	22-28-4313	A-42375-0066
14	22-28-4143	A-42375-0049	32	22-28-4323	A-42375-0067
15	22-28-4153	A-42375-0050	33	22-28-4333	A-42375-0068
16	22-28-4163	A-42375-0051	34	22-28-4343	A-42375-0069
17	22-28-4173	A-42375-0052	35	22-28-4353	A-42375-0070
18	22-28-4183	A-42375-0053	36	22-28-4363	A-42375-0071
19	22-28-4193	A-42375-0054			

SYMBOLS

▽ = 0
▽ = 0
▽ = 0
▽ = 0
▼ = 0
▽ = 0
☒ = 0
■ = 0
▽ = 0

THIS DRAWING CONTAINS INFORMATION THAT IS PROPRIETARY TO MOLEX ELECTRONIC TECHNOLOGIES, LLC AND SHOULD NOT BE USED WITHOUT WRITTEN PERMISSION

DIMENSION UNITS: MM/IN
SCALE: 1:1

GENERAL TOLERANCES (UNLESS SPECIFIED)

	MM	INCH
4 PLACES	±	±
3 PLACES	±	± 0.01
2 PLACES	± 0.25	±
1 PLACE	± 0.38	±
0 PLACES	±	±
ANGULAR TOL	± 0.5 °	

DRAFT WHERE APPLICABLE MUST REMAIN WITHIN DIMENSIONS

CURRENT REV DESC: GOLD LENGTH SPEC CHANGED AS MIN 2.54- MAX 5.54 FOR A-42375-0037/0071

EC NO: 689596
DRWN: SHRUTJ 2021/09/14
CHK'D: SHRUTJ 2021/12/20
APPR: ISHWARG 2021/12/20

INITIAL REVISION:
DRWN: SCHAFER 2003/02/11
APPR: MARGULIS 2004/02/27

THIRD ANGLE PROJECTION | DRAWING: B-SIZE | SERIES: 42375

molex

KK 100 HEADER ASSY
FLAT VERTICAL BREAKAWAY

PRODUCT CUSTOMER DRAWING

DOCUMENT NUMBER	DOC TYPE	DOC PART	REVISION
SD-42375-001	PSD	001	V

MATERIAL NUMBER	CUSTOMER	SHEET NUMBER
SEE CHART	GENERAL MARKET	2 OF 35

DOCUMENT STATUS	P1	RELEASE DATE	2021/12/20 12:18:33

FORMAT: Eng-lega-master-tb-prod-B
REVISION: D
DATE: 2018/01/18

ENG. NO: A-42375-0072/0106					
HEADER NUMBER:			42312-0036		
PIN NUMBER:			42663-ABB228		
PIN LENGTH: L			.455 / 11.56		
MATING LENGTH: M			.240 / 6.09		
GOLD POINT: G			.100 / 2.54		
PC TAIL LENGTH: P			.125 / 3.18		
TIN: T			.100 / 2.54		
CKTS:			2-36		
KINKS:			NO		
VOIDED CKTS:			NONE		
PACKAGING:			BULK PK-40873-0041		
CKTS	MATERIAL NUMBER	ENG NUMBER	CKTS	MATERIAL NUMBER	ENG NUMBER
2	22-28-4026	A-42375-0072	20	22-28-4206	A-42375-0090
3	22-28-4036	A-42375-0073	21	22-28-4216	A-42375-0091
4	22-28-4046	A-42375-0074	22	22-28-4226	A-42375-0092
5	22-28-4056	A-42375-0075	23	22-28-4236	A-42375-0093
6	22-28-4066	A-42375-0076	24	22-28-4246	A-42375-0094
7	22-28-4076	A-42375-0077	25	22-28-4256	A-42375-0095
8	22-28-4086	A-42375-0078	26	22-28-4266	A-42375-0096
9	22-28-4096	A-42375-0079	27	22-28-4276	A-42375-0097
10	22-28-4106	A-42375-0080	28	22-28-4286	A-42375-0098
11	22-28-4116	A-42375-0081	29	22-28-4296	A-42375-0099
12	22-28-4126	A-42375-0082	30	22-28-4306	A-42375-0100
13	22-28-4136	A-42375-0083	31	22-28-4316	A-42375-0101
14	22-28-4146	A-42375-0084	32	22-28-4326	A-42375-0102
15	22-28-4156	A-42375-0085	33	22-28-4336	A-42375-0103
16	22-28-4166	A-42375-0086	34	22-28-4346	A-42375-0104
17	22-28-4176	A-42375-0087	35	22-28-4356	A-42375-0105
18	22-28-4186	A-42375-0088	36	22-28-4366	A-42375-0106
19	22-28-4196	A-42375-0089			

ENG. NO: A-42375-0107/0141					
HEADER NUMBER:			42312-0036		
PIN NUMBER:			42663-ATA154		
PIN LENGTH: L			.530 / 13.46		
MATING LENGTH: M			.320 / 8.13		
GOLD POINT: G			N/A		
PC TAIL LENGTH: P			.120 / 3.05		
TIN: T			.120 / 3.05		
CKTS:			2-36		
KINKS:			NO		
VOIDED CKTS:			NONE		
PACKAGING:			BULK PK-40873-0041		
CKTS	MATERIAL NUMBER	ENG NUMBER	CKTS	MATERIAL NUMBER	ENG NUMBER
2	22-28-4021	A-42375-0107	20	22-28-4201	A-42375-0125
3	22-28-4031	A-42375-0108	21	22-28-4211	A-42375-0126
4	22-28-4041	A-42375-0109	22	22-28-4221	A-42375-0127
5	22-28-4051	A-42375-0110	23	22-28-4231	A-42375-0128
6	22-28-4061	A-42375-0111	24	22-28-4241	A-42375-0129
7	22-28-4071	A-42375-0112	25	22-28-4251	A-42375-0130
8	22-28-4081	A-42375-0113	26	22-28-4261	A-42375-0131
9	22-28-4091	A-42375-0114	27	22-28-4271	A-42375-0132
10	22-28-4101	A-42375-0115	28	22-28-4281	A-42375-0133
11	22-28-4111	A-42375-0116	29	22-28-4291	A-42375-0134
12	22-28-4121	A-42375-0117	30	22-28-4301	A-42375-0135
13	22-28-4131	A-42375-0118	31	22-28-4311	A-42375-0136
14	22-28-4141	A-42375-0119	32	22-28-4321	A-42375-0137
15	22-28-4151	A-42375-0120	33	22-28-4331	A-42375-0138
16	22-28-4161	A-42375-0121	34	22-28-4341	A-42375-0139
17	22-28-4171	A-42375-0122	35	22-28-4351	A-42375-0140
18	22-28-4181	A-42375-0123	36	22-28-4361	A-42375-0141
19	22-28-4191	A-42375-0124			

SYMBOLS
▽ = 0
▽ = 0
▽ = 0
▽ = 0
▼ = 0
▽ = 0
☒ = 0
■ = 0
▽ = 0

THIS DRAWING CONTAINS INFORMATION THAT IS PROPRIETARY TO MOLEX ELECTRONIC TECHNOLOGIES, LLC AND SHOULD NOT BE USED WITHOUT WRITTEN PERMISSION

DIMENSION UNITS: MM/IN
SCALE: 1:1

GENERAL TOLERANCES (UNLESS SPECIFIED)

	MM	INCH
4 PLACES	±	±
3 PLACES	±	± 0.01
2 PLACES	± 0.25	±
1 PLACE	± 0.38	±
0 PLACES	±	±
ANGULAR TOL	± 0.5 °	

DRAFT WHERE APPLICABLE MUST REMAIN WITHIN DIMENSIONS

CURRENT REV DESC: GOLD LENGTH SPEC CHANGED AS MIN 2.54- MAX 5.54 FOR A-42375-0037/0071

EC NO: 689596
DRWN: SHRUTJ 2021/09/14
CHK'D: SHRUTJ 2021/12/20
APPR: ISHWARG 2021/12/20

INITIAL REVISION:
DRWN: SCHAFER 2003/02/11
APPR: MARGULIS 2004/02/27

THIRD ANGLE PROJECTION
DRAWING: B-SIZE
SERIES: 42375

molex

KK 100 HEADER ASSY
FLAT VERTICAL BREAKAWAY

PRODUCT CUSTOMER DRAWING

DOCUMENT NUMBER	DOC TYPE	DOC PART	REVISION
SD-42375-001	PSD	001	V

MATERIAL NUMBER	CUSTOMER	SHEET NUMBER
SEE CHART	GENERAL MARKET	3 OF 35

DOCUMENT STATUS	P1	RELEASE DATE	2021/12/20 12:18:33

FORMAT: Eng-lega-master-tb-prod-B
REVISION: D
DATE: 2018/01/18

ENG. NO: A-42375-0142/0176					
HEADER NUMBER:			42312-0036		
PIN NUMBER:			42663-ATB208		
PIN LENGTH: L			.530 / 13.46		
MATING LENGTH: M			320 / 8.13		
GOLD POINT: G			.140 / 3.56		
PC TAIL LENGTH: P			.120 / 3.05		
TIN: T			.135 / 3.43		
CKTS:			2-36		
KINKS:			NO		
VOIDED CKTS:			NONE		
PACKAGING:			BULK PK-40873-0041		
CKTS	MATERIAL NUMBER	ENG NUMBER	CKTS	MATERIAL NUMBER	ENG NUMBER
2	22-28-4024	A-42375-0142	20	22-28-4204	A-42375-0160
3	22-28-4035	A-42375-0143	21	22-28-4214	A-42375-0161
4	22-28-4044	A-42375-0144	22	22-28-4224	A-42375-0162
5	22-28-4054	A-42375-0145	23	22-28-4234	A-42375-0163
6	22-28-4064	A-42375-0146	24	22-28-4244	A-42375-0164
7	22-28-4074	A-42375-0147	25	22-28-4254	A-42375-0165
8	22-28-4084	A-42375-0148	26	22-28-4264	A-42375-0166
9	22-28-4094	A-42375-0149	27	22-28-4274	A-42375-0167
10	22-28-4104	A-42375-0150	28	22-28-4284	A-42375-0168
11	22-28-4114	A-42375-0151	29	22-28-4294	A-42375-0169
12	22-28-4124	A-42375-0152	30	22-28-4304	A-42375-0170
13	22-28-4134	A-42375-0153	31	22-28-4314	A-42375-0171
14	22-28-4144	A-42375-0154	32	22-28-4324	A-42375-0172
15	22-28-4154	A-42375-0155	33	22-28-4334	A-42375-0173
16	22-28-4164	A-42375-0156	34	22-28-4344	A-42375-0174
17	22-28-4174	A-42375-0157	35	22-28-4354	A-42375-0175
18	22-28-4184	A-42375-0158	36	22-28-4364	A-42375-0176
19	22-28-4194	A-42375-0159			

ENG. NO: A-42375-0177/0211					
HEADER NUMBER:			42312-0036		
PIN NUMBER:			42663-ATB208		
PIN LENGTH: L			.530 / 13.46		
MATING LENGTH: M			320 / 8.13		
GOLD POINT: G			.140 / 3.56		
PC TAIL LENGTH: P			.120 / 3.05		
TIN: T			.135 / 3.43		
CKTS:			2-36		
KINKS:			NO		
VOIDED CKTS:			NONE		
PACKAGING:			BULK PK-40873-0041		
CKTS	MATERIAL NUMBER	ENG NUMBER	CKTS	MATERIAL NUMBER	ENG NUMBER
2	22-28-4027	A-42375-0177	20	22-28-4207	A-42375-0195
3	22-28-4037	A-42375-0178	21	22-28-4217	A-42375-0196
4	22-28-4047	A-42375-0179	22	22-28-4227	A-42375-0197
5	22-28-4057	A-42375-0180	23	22-28-4237	A-42375-0198
6	22-28-4067	A-42375-0181	24	22-28-4247	A-42375-0199
7	22-28-4077	A-42375-0182	25	22-28-4257	A-42375-0200
8	22-28-4087	A-42375-0183	26	22-28-4267	A-42375-0201
9	22-28-4097	A-42375-0184	27	22-28-4277	A-42375-0202
10	22-28-4107	A-42375-0185	28	22-28-4287	A-42375-0203
11	22-28-4117	A-42375-0186	29	22-28-4297	A-42375-0204
12	22-28-4127	A-42375-0187	30	22-28-4307	A-42375-0205
13	22-28-4137	A-42375-0188	31	22-28-4317	A-42375-0206
14	22-28-4147	A-42375-0189	32	22-28-4327	A-42375-0207
15	22-28-4157	A-42375-0190	33	22-28-4337	A-42375-0208
16	22-28-4167	A-42375-0191	34	22-28-4347	A-42375-0209
17	22-28-4177	A-42375-0192	35	22-28-4357	A-42375-0210
18	22-28-4187	A-42375-0193	36	22-28-4367	A-42375-0211
19	22-28-4197	A-42375-0194			

SYMBOLS

▽F = 0
▽E = 0
▽D = 0
▽C = 0
▼ = 0
▽B = 0
☒ = 0
■ = 0
▽A = 0

THIS DRAWING CONTAINS INFORMATION THAT IS PROPRIETARY TO MOLEX ELECTRONIC TECHNOLOGIES, LLC AND SHOULD NOT BE USED WITHOUT WRITTEN PERMISSION

DIMENSION UNITS: MM/IN | SCALE: 1:1

GENERAL TOLERANCES (UNLESS SPECIFIED)

	MM	INCH
4 PLACES	±	±
3 PLACES	±	± 0.01
2 PLACES	± 0.25	±
1 PLACE	± 0.38	±
0 PLACES	±	±
ANGULAR TOL	± 0.5 °	

DRAFT WHERE APPLICABLE MUST REMAIN WITHIN DIMENSIONS

CURRENT REV DESC: GOLD LENGTH SPEC CHANGED AS MIN 2.54- MAX 5.54 FOR A-42375-0037/0071

EC NO: 689596
DRWN: SHRUTJ 2021/09/14
CHK'D: SHRUTJ 2021/12/20
APPR: ISHWARG 2021/12/20

INITIAL REVISION:
DRWN: SCHAFER 2003/02/11
APPR: MARGULIS 2004/02/27

THIRD ANGLE PROJECTION | DRAWING: B-SIZE | SERIES: 42375

molex

KK 100 HEADER ASSY
FLAT VERTICAL BREAKAWAY

PRODUCT CUSTOMER DRAWING

DOCUMENT NUMBER	DOC TYPE	DOC PART	REVISION
SD-42375-001	PSD	001	V

MATERIAL NUMBER	CUSTOMER	SHEET NUMBER
SEE CHART	GENERAL MARKET	4 OF 35

DOCUMENT STATUS	P1	RELEASE DATE	2021/12/20 12:18:33

FORMAT: Eng-lega-master-tb-prod-B
REVISION: D
DATE: 2018/01/18

ENG. NO: A-42375-0212/0246					
HEADER NUMBER:			42312-0036		
PIN NUMBER:			42663-AMA154		
PIN LENGTH: L			.505 / 12.83		
MATING LENGTH: M			.295 / 7.49		
GOLD POINT: G			N/A		
PC TAIL LENGTH: P			.120 / 3.05		
TIN: T			OVERALL		
CKTS:			2-36		
KINKS:			NO		
VOIDED CKTS:			NONE		
PACKAGING:			BULK PK-40873-0041		
CKTS	MATERIAL NUMBER	ENG NUMBER	CKTS	MATERIAL NUMBER	ENG NUMBER
2	22-28-4022	A-42375-0212	20	22-28-4202	A-42375-0230
3	22-28-4032	A-42375-0213	21	22-28-4212	A-42375-0231
4	22-28-4042	A-42375-0214	22	22-28-4222	A-42375-0232
5	22-28-4052	A-42375-0215	23	22-28-4232	A-42375-0233
6	22-28-4062	A-42375-0216	24	22-28-4242	A-42375-0234
7	22-28-4072	A-42375-0217	25	22-28-4252	A-42375-0235
8	22-28-4082	A-42375-0218	26	22-28-4262	A-42375-0236
9	22-28-4092	A-42375-0219	27	22-28-4272	A-42375-0237
10	22-28-4102	A-42375-0220	28	22-28-4282	A-42375-0238
11	22-28-4112	A-42375-0221	29	22-28-4292	A-42375-0239
12	22-28-4122	A-42375-0222	30	22-28-4302	A-42375-0240
13	22-28-4132	A-42375-0223	31	22-28-4312	A-42375-0241
14	22-28-4142	A-42375-0224	32	22-28-4322	A-42375-0242
15	22-28-4152	A-42375-0225	33	22-28-4332	A-42375-0243
16	22-28-4162	A-42375-0226	34	22-28-4342	A-42375-0244
17	22-28-4172	A-42375-0227	35	22-28-4352	A-42375-0245
18	22-28-4182	A-42375-0228	36	22-28-4362	A-42375-0246
19	22-28-4192	A-42375-0229			

ENG. NO: A-42375-0247/0281					
HEADER NUMBER:			42312-0036		
PIN NUMBER:			42663-ATB208		
PIN LENGTH: L			.505 / 12.83		
MATING LENGTH: M			.295 / 7.49		
GOLD POINT: G			.140 / 3.56		
PC TAIL LENGTH: P			.120 / 3.05		
TIN: T			.135 / 3.43		
CKTS:			2-36		
KINKS:			NO		
VOIDED CKTS:			NONE		
PACKAGING:			BULK PK-40873-0041		
CKTS	MATERIAL NUMBER	ENG NUMBER	CKTS	MATERIAL NUMBER	ENG NUMBER
2	22-28-4025	A-42375-0247	20	22-28-4205	A-42375-0265
3	22-28-4035	A-42375-0248	21	22-28-4215	A-42375-0266
4	22-28-4045	A-42375-0249	22	22-28-4225	A-42375-0267
5	22-28-4055	A-42375-0250	23	22-28-4235	A-42375-0268
6	22-28-4065	A-42375-0251	24	22-28-4245	A-42375-0269
7	22-28-4075	A-42375-0252	25	22-28-4255	A-42375-0270
8	22-28-4085	A-42375-0253	26	22-28-4265	A-42375-0271
9	22-28-4095	A-42375-0254	27	22-28-4275	A-42375-0272
10	22-28-4105	A-42375-0255	28	22-28-4285	A-42375-0273
11	22-28-4115	A-42375-0256	29	22-28-4295	A-42375-0274
12	22-28-4125	A-42375-0257	30	22-28-4305	A-42375-0275
13	22-28-4135	A-42375-0258	31	22-28-4315	A-42375-0276
14	22-28-4145	A-42375-0259	32	22-28-4325	A-42375-0277
15	22-28-4155	A-42375-0260	33	22-28-4335	A-42375-0278
16	22-28-4165	A-42375-0261	34	22-28-4345	A-42375-0279
17	22-28-4175	A-42375-0262	35	22-28-4355	A-42375-0280
18	22-28-4185	A-42375-0263	36	22-28-4365	A-42375-0281
19	22-28-4195	A-42375-0264			

SYMBOLS

▽ = 0
▽ = 0
▽ = 0
▽ = 0
▼ = 0
▽ = 0
☒ = 0
■ = 0
▽ = 0

THIS DRAWING CONTAINS INFORMATION THAT IS PROPRIETARY TO MOLEX ELECTRONIC TECHNOLOGIES, LLC AND SHOULD NOT BE USED WITHOUT WRITTEN PERMISSION

DIMENSION UNITS: MM/IN
SCALE: 1:1

GENERAL TOLERANCES (UNLESS SPECIFIED)

	MM	INCH
4 PLACES	±	±
3 PLACES	±	± 0.01
2 PLACES	± 0.25	±
1 PLACE	± 0.38	±
0 PLACES	±	±
ANGULAR TOL	± 0.5 °	

DRAFT WHERE APPLICABLE MUST REMAIN WITHIN DIMENSIONS

CURRENT REV DESC: GOLD LENGTH SPEC CHANGED AS MIN 2.54- MAX 5.54 FOR A-42375-0037/0071

EC NO: 689596
DRWN: SHRUTJ 2021/09/14
CHK'D: SHRUTJ 2021/12/20
APPR: ISHWARG 2021/12/20

INITIAL REVISION:
DRWN: SCHAFER 2003/02/11
APPR: MARGULIS 2004/02/27

THIRD ANGLE PROJECTION
DRAWING: B-SIZE
SERIES: 42375

molex

KK 100 HEADER ASSY
FLAT VERTICAL BREAKAWAY

PRODUCT CUSTOMER DRAWING

DOCUMENT NUMBER	DOC TYPE	DOC PART	REVISION
SD-42375-001	PSD	001	V

MATERIAL NUMBER	CUSTOMER	SHEET NUMBER
SEE CHART	GENERAL MARKET	5 OF 35

DOCUMENT STATUS	P1	RELEASE DATE	2021/12/20 12:18:33

FORMAT: Eng-lega-master-tb-prod-B
REVISION: D
DATE: 2018/01/18

ENG. NO: A-42375-0282/0316					
HEADER NUMBER:			42312-0036		
PIN NUMBER:			42663-AMB228		
PIN LENGTH: L			.505 / 12.83		
MATING LENGTH: M			.295 / 7.49		
GOLD POINT: G			.140 / 3.56		
PC TAIL LENGTH: P			.120 / 3.05		
TIN: T			.135 / 3.43		
CKTS:			2-36		
KINKS:			NO		
VOIDED CKTS:			NONE		
PACKAGING:			BULK PK-40873-0041		
CKTS	MATERIAL NUMBER	ENG NUMBER	CKTS	MATERIAL NUMBER	ENG NUMBER
2	22-28-4028	A-42375-0282	20	22-28-4208	A-42375-0300
3	22-28-4038	A-42375-0283	21	22-28-4218	A-42375-0301
4	22-28-4048	A-42375-0284	22	22-28-4228	A-42375-0302
5	22-28-4058	A-42375-0285	23	22-28-4238	A-42375-0303
6	22-28-4068	A-42375-0286	24	22-28-4248	A-42375-0304
7	22-28-4078	A-42375-0287	25	22-28-4258	A-42375-0305
8	22-28-4088	A-42375-0288	26	22-28-4268	A-42375-0306
9	22-28-4098	A-42375-0289	27	22-28-4278	A-42375-0307
10	22-28-4108	A-42375-0290	28	22-28-4288	A-42375-0308
11	22-28-4118	A-42375-0291	29	22-28-4298	A-42375-0309
12	22-28-4128	A-42375-0292	30	22-28-4308	A-42375-0310
13	22-28-4138	A-42375-0293	31	22-28-4318	A-42375-0311
14	22-28-4148	A-42375-0294	32	22-28-4328	A-42375-0312
15	22-28-4158	A-42375-0295	33	22-28-4338	A-42375-0313
16	22-28-4168	A-42375-0296	34	22-28-4348	A-42375-0314
17	22-28-4178	A-42375-0297	35	22-28-4358	A-42375-0315
18	22-28-4188	A-42375-0298	36	22-28-4368	A-42375-0316
19	22-28-4198	A-42375-0299			

ENG. NO: A-42375-0317/0351					
HEADER NUMBER:			42312-0036		
PIN NUMBER:			42663-ADA154		
PIN LENGTH: L			.465 / 11.81		
MATING LENGTH: M			.240 / 6.09		
GOLD POINT: G			N/A		
PC TAIL LENGTH: P			.135 / 3.43		
TIN: T			OVERALL		
CKTS:			2-36		
KINKS:			SMES-42003		
VOIDED CKTS:			NONE		
PACKAGING:			BULK PK-40873-0041		
CKTS	MATERIAL NUMBER	ENG NUMBER	CKTS	MATERIAL NUMBER	ENG NUMBER
2	22-28-5020	A-42375-0317	20	22-28-5200	A-42375-0335
3	22-28-5030	A-42375-0318	21	22-28-5201	A-42375-0336
4	22-28-5040	A-42375-0319	22	22-28-5202	A-42375-0337
5	22-28-5050	A-42375-0320	23	22-28-5203	A-42375-0338
6	22-28-5060	A-42375-0321	24	22-28-5204	A-42375-0339
7	22-28-5070	A-42375-0322	25	22-28-5205	A-42375-0340
8	22-28-5080	A-42375-0323	26	22-28-5206	A-42375-0341
9	22-28-5090	A-42375-0324	27	22-28-5207	A-42375-0342
10	22-28-5100	A-42375-0325	28	22-28-5208	A-42375-0343
11	22-28-5110	A-42375-0326	29	22-28-5209	A-42375-0344
12	22-28-5120	A-42375-0327	30	22-28-5300	A-42375-0345
13	22-28-5130	A-42375-0328	31	22-28-5310	A-42375-0346
14	22-28-5140	A-42375-0329	32	22-28-5320	A-42375-0347
15	22-28-5150	A-42375-0330	33	22-28-5330	A-42375-0348
16	22-28-5160	A-42375-0331	34	22-28-5340	A-42375-0349
17	22-28-5170	A-42375-0332	35	22-28-5350	A-42375-0350
18	22-28-5180	A-42375-0333	36	22-28-5360	A-42375-0351
19	22-28-5190	A-42375-0334			

SYMBOLS	
= 0	
= 0	
= 0	
= 0	
= 0	
= 0	
= 0	
= 0	
= 0	

THIS DRAWING CONTAINS INFORMATION THAT IS PROPRIETARY TO MOLEX ELECTRONIC TECHNOLOGIES, LLC AND SHOULD NOT BE USED WITHOUT WRITTEN PERMISSION

DIMENSION UNITS	SCALE
MM/IN	1:1

GENERAL TOLERANCES (UNLESS SPECIFIED)

	MM	INCH
4 PLACES	±	±
3 PLACES	±	± 0.01
2 PLACES	± 0.25	±
1 PLACE	± 0.38	±
0 PLACES	±	±
ANGULAR TOL	± 0.5 °	

DRAFT WHERE APPLICABLE MUST REMAIN WITHIN DIMENSIONS

CURRENT REV DESC: GOLD LENGTH SPEC CHANGED AS MIN 2.54- MAX 5.54 FOR A-42375-0037/0071

EC NO: 689596

DRWN:	SHRUTJ	2021/09/14
CHK'D:	SHRUTJ	2021/12/20
APPR:	ISHWARG	2021/12/20

INITIAL REVISION:

DRWN:	SCHAFER	2003/02/11
APPR:	MARGULIS	2004/02/27

THIRD ANGLE PROJECTION

DRAWING	SERIES
B-SIZE	42375

molex

KK 100 HEADER ASSY
FLAT VERTICAL BREAKAWAY

PRODUCT CUSTOMER DRAWING

DOCUMENT NUMBER	DOC TYPE	DOC PART	REVISION
SD-42375-001	PSD	001	V

MATERIAL NUMBER	CUSTOMER	SHEET NUMBER
SEE CHART	GENERAL MARKET	6 OF 35

DOCUMENT STATUS	P1	RELEASE DATE	2021/12/20 12:18:33

FORMAT: Eng-lega-master-tb-prod-B
REVISION: D
DATE: 2018/01/18

ENG. NO: A-42375-0352/0386					
HEADER NUMBER:			42312-0036		
PIN NUMBER:			42663-ADB208		
PIN LENGTH: L			.465 / 11.81		
MATING LENGTH: M			.240 / 6.09		
GOLD POINT: G			.100 / 2.54		
PC TAIL LENGTH: P			.135 / 3.43		
TIN: T			.100 / 2.54		
CKTS:			2-36		
KINKS:			SMES-42003		
VOIDED CKTS:			NONE		
PACKAGING:			BULK PK-40873-0041		
CKTS	MATERIAL NUMBER	ENG NUMBER	CKTS	MATERIAL NUMBER	ENG NUMBER
2	22-28-5023	A-42375-0352	20	22-28-5203	A-42375-0370
3	22-28-5033	A-42375-0353	21	22-28-5213	A-42375-0371
4	22-28-5043	A-42375-0354	22	22-28-5223	A-42375-0372
5	22-28-5053	A-42375-0355	23	22-28-5233	A-42375-0373
6	22-28-5063	A-42375-0356	24	22-28-5243	A-42375-0374
7	22-28-5073	A-42375-0357	25	22-28-5253	A-42375-0375
8	22-28-5083	A-42375-0358	26	22-28-5263	A-42375-0376
9	22-28-5093	A-42375-0359	27	22-28-5273	A-42375-0377
10	22-28-5103	A-42375-0360	28	22-28-5283	A-42375-0378
11	22-28-5113	A-42375-0361	29	22-28-5293	A-42375-0379
12	22-28-5123	A-42375-0362	30	22-28-5303	A-42375-0380
13	22-28-5133	A-42375-0363	31	22-28-5313	A-42375-0381
14	22-28-5143	A-42375-0364	32	22-28-5323	A-42375-0382
15	22-28-5153	A-42375-0365	33	22-28-5333	A-42375-0383
16	22-28-5163	A-42375-0366	34	22-28-5343	A-42375-0384
17	22-28-5173	A-42375-0367	35	22-28-5353	A-42375-0385
18	22-28-5183	A-42375-0368	36	22-28-5363	A-42375-0386
19	22-28-5193	A-42375-0369			

ENG. NO: A-42375-0387/0421					
HEADER NUMBER:			42312-0036		
PIN NUMBER:			42663-ADB228		
PIN LENGTH: L			.465 / 11.81		
MATING LENGTH: M			.240 / 6.09		
GOLD POINT: G			.100 / 2.54		
PC TAIL LENGTH: P			.135 / 3.43		
TIN: T			.100 / 2.54		
CKTS:			2-36		
KINKS:			SMES-42003		
VOIDED CKTS:			NONE		
PACKAGING:			BULK PK-40873-0041		
CKTS	MATERIAL NUMBER	ENG NUMBER	CKTS	MATERIAL NUMBER	ENG NUMBER
2	22-28-5026	A-42375-0387	20	22-28-5206	A-42375-0405
3	22-28-5036	A-42375-0388	21	22-28-5216	A-42375-0406
4	22-28-5046	A-42375-0389	22	22-28-5226	A-42375-0407
5	22-28-5056	A-42375-0390	23	22-28-5236	A-42375-0408
6	22-28-5066	A-42375-0391	24	22-28-5246	A-42375-0409
7	22-28-5076	A-42375-0392	25	22-28-5256	A-42375-0410
8	22-28-5086	A-42375-0393	26	22-28-5266	A-42375-0411
9	22-28-5096	A-42375-0394	27	22-28-5276	A-42375-0412
10	22-28-5106	A-42375-0395	28	22-28-5286	A-42375-0413
11	22-28-5116	A-42375-0396	29	22-28-5296	A-42375-0414
12	22-28-5126	A-42375-0397	30	22-28-5306	A-42375-0415
13	22-28-5136	A-42375-0398	31	22-28-5316	A-42375-0416
14	22-28-5146	A-42375-0399	32	22-28-5326	A-42375-0417
15	22-28-5156	A-42375-0400	33	22-28-5336	A-42375-0418
16	22-28-5166	A-42375-0401	34	22-28-5346	A-42375-0419
17	22-28-5176	A-42375-0402	35	22-28-5356	A-42375-0420
18	22-28-5186	A-42375-0403	36	22-28-5366	A-42375-0421
19	22-28-5196	A-42375-0404			

SYMBOLS

= 0

= 0

= 0

= 0

= 0

= 0

= 0

= 0

= 0

THIS DRAWING CONTAINS INFORMATION THAT IS PROPRIETARY TO MOLEX ELECTRONIC TECHNOLOGIES, LLC AND SHOULD NOT BE USED WITHOUT WRITTEN PERMISSION

DIMENSION UNITS	SCALE
MM/IN	1:1

GENERAL TOLERANCES (UNLESS SPECIFIED)

	MM	INCH
4 PLACES	±	±
3 PLACES	±	± 0.01
2 PLACES	± 0.25	±
1 PLACE	± 0.38	±
0 PLACES	±	±
ANGULAR TOL	± 0.5 °	

DRAFT WHERE APPLICABLE MUST REMAIN WITHIN DIMENSIONS

CURRENT REV DESC: GOLD LENGTH SPEC CHANGED AS MIN 2.54- MAX 5.54 FOR A-42375-0037/0071

EC NO: 689596

DRWN: SHRUTJ 2021/09/14

CHK'D: SHRUTJ 2021/12/20

APPR: ISHWARG 2021/12/20

INITIAL REVISION:

DRWN: SCHAFER 2003/02/11

APPR: MARGULIS 2004/02/27

THIRD ANGLE PROJECTION | DRAWING: B-SIZE | SERIES: 42375

molex

KK 100 HEADER ASSY
FLAT VERTICAL BREAKAWAY

PRODUCT CUSTOMER DRAWING

DOCUMENT NUMBER	DOC TYPE	DOC PART	REVISION
SD-42375-001	PSD	001	V

MATERIAL NUMBER	CUSTOMER	SHEET NUMBER
SEE CHART	GENERAL MARKET	7 OF 35

DOCUMENT STATUS	P1	RELEASE DATE	2021/12/20 12:18:33

FORMAT: Eng-lega-master-tb-prod-B
REVISION: D
DATE: 2018/01/18

ENG. NO: A-42375-0422/0456					
HEADER NUMBER:			42312-0036		
PIN NUMBER:			42663-AYA154		
PIN LENGTH: L			.545 / 13.84		
MATING LENGTH: M			.320 / 8.13		
GOLD POINT: G			N/A		
PC TAIL LENGTH: P			.135 / 3.43		
TIN: T			OVERALL		
CKTS:			2-36		
KINKS:			SMES-42003		
VOIDED CKTS:			NONE		
PACKAGING:			BULK PK-40873-0041		
CKTS	MATERIAL NUMBER	ENG NUMBER	CKTS	MATERIAL NUMBER	ENG NUMBER
2	22-28-5021	A-42375-0422	20	22-28-5201	A-42375-0440
3	22-28-5031	A-42375-0423	21	22-28-5211	A-42375-0441
4	22-28-5041	A-42375-0424	22	22-28-5221	A-42375-0442
5	22-28-5051	A-42375-0425	23	22-28-5231	A-42375-0443
6	22-28-5061	A-42375-0426	24	22-28-5241	A-42375-0444
7	22-28-5071	A-42375-0427	25	22-28-5251	A-42375-0445
8	22-28-5081	A-42375-0428	26	22-28-5261	A-42375-0446
9	22-28-5091	A-42375-0429	27	22-28-5271	A-42375-0447
10	22-28-5101	A-42375-0430	28	22-28-5281	A-42375-0448
11	22-28-5111	A-42375-0431	29	22-28-5291	A-42375-0449
12	22-28-5121	A-42375-0432	30	22-28-5301	A-42375-0450
13	22-28-5131	A-42375-0433	31	22-28-5311	A-42375-0451
14	22-28-5141	A-42375-0434	32	22-28-5321	A-42375-0452
15	22-28-5151	A-42375-0435	33	22-28-5331	A-42375-0453
16	22-28-5161	A-42375-0436	34	22-28-5341	A-42375-0454
17	22-28-5171	A-42375-0437	35	22-28-5351	A-42375-0455
18	22-28-5181	A-42375-0438	36	22-28-5361	A-42375-0456
19	22-28-5191	A-42375-0439			

ENG. NO: A-42375-0457/0491					
HEADER NUMBER:			42312-0036		
PIN NUMBER:			42663-ADB208		
PIN LENGTH: L			.545 / 13.84		
MATING LENGTH: M			.320 / 8.13		
GOLD POINT: G			.140 / 3.56		
PC TAIL LENGTH: P			.135 / 3.43		
TIN: T			.135 / 3.43		
CKTS:			2-36		
KINKS:			SMES-42003		
VOIDED CKTS:			NONE		
PACKAGING:			BULK PK-40873-0041		
CKTS	MATERIAL NUMBER	ENG NUMBER	CKTS	MATERIAL NUMBER	ENG NUMBER
2	22-28-5024	A-42375-0457	20	22-28-5204	A-42375-0475
3	22-28-5034	A-42375-0458	21	22-28-5214	A-42375-0476
4	22-28-5044	A-42375-0459	22	22-28-5224	A-42375-0477
5	22-28-5054	A-42375-0460	23	22-28-5234	A-42375-0478
6	22-28-5064	A-42375-0461	24	22-28-5244	A-42375-0479
7	22-28-5074	A-42375-0462	25	22-28-5254	A-42375-0480
8	22-28-5084	A-42375-0463	26	22-28-5264	A-42375-0481
9	22-28-5094	A-42375-0464	27	22-28-5274	A-42375-0482
10	22-28-5104	A-42375-0365	28	22-28-5284	A-42375-0483
11	22-28-5114	A-42375-0466	29	22-28-5294	A-42375-044
12	22-28-5124	A-42375-0467	30	22-28-5304	A-42375-0485
13	22-28-5134	A-42375-0468	31	22-28-5314	A-42375-0486
14	22-28-5144	A-42375-0469	32	22-28-5324	A-42375-0487
15	22-28-5154	A-42375-0470	33	22-28-5334	A-42375-0488
16	22-28-5164	A-42375-0471	34	22-28-5344	A-42375-0489
17	22-28-5174	A-42375-0472	35	22-28-5354	A-42375-0490
18	22-28-5184	A-42375-0473	36	22-28-5364	A-42375-0491
19	22-28-5194	A-42375-0474			

SYMBOLS

= 0
= 0
= 0
= 0
= 0
= 0
= 0
= 0
= 0

THIS DRAWING CONTAINS INFORMATION THAT IS PROPRIETARY TO MOLEX ELECTRONIC TECHNOLOGIES, LLC AND SHOULD NOT BE USED WITHOUT WRITTEN PERMISSION

DIMENSION UNITS: MM/IN
SCALE: 1:1

GENERAL TOLERANCES (UNLESS SPECIFIED)

	MM	INCH
4 PLACES	±	±
3 PLACES	±	± 0.01
2 PLACES	± 0.25	±
1 PLACE	± 0.38	±
0 PLACES	±	±
ANGULAR TOL	± 0.5 °	

DRAFT WHERE APPLICABLE MUST REMAIN WITHIN DIMENSIONS

CURRENT REV DESC: GOLD LENGTH SPEC CHANGED AS MIN 2.54- MAX 5.54 FOR A-42375-0037/0071

EC NO: 689596
DRWN: SHRUTJ 2021/09/14
CHK'D: SHRUTJ 2021/12/20
APPR: ISHWARG 2021/12/20

INITIAL REVISION:
DRWN: SCHAFER 2003/02/11
APPR: MARGULIS 2004/02/27

THIRD ANGLE PROJECTION
DRAWING: B-SIZE
SERIES: 42375

molex

KK 100 HEADER ASSY
FLAT VERTICAL BREAKAWAY

PRODUCT CUSTOMER DRAWING

DOCUMENT NUMBER	DOC TYPE	DOC PART	REVISION
SD-42375-001	PSD	001	V

MATERIAL NUMBER	CUSTOMER	SHEET NUMBER
SEE CHART	GENERAL MARKET	8 OF 35

DOCUMENT STATUS	P1	RELEASE DATE	2021/12/20 12:18:33

FORMAT: Eng-lega-master-tb-prod-B
REVISION: D
DATE: 2018/01/18

ENG. NO: A-42375-0492/0526					
HEADER NUMBER:			42312-0036		
PIN NUMBER:			42663-AYB228		
PIN LENGTH: L			.545 / 13.84		
MATING LENGTH: M			.320 / 8.13		
GOLD POINT: G			140 / 3.56		
PC TAIL LENGTH: P			.135 / 3.43		
TIN: T			.135 / 3.43		
CKTS:			2-36		
KINKS:			SMES-42003		
VOIDED CKTS:			NONE		
PACKAGING:			BULK PK-40873-0041		
CKTS	MATERIAL NUMBER	ENG NUMBER	CKTS	MATERIAL NUMBER	ENG NUMBER
2	22-28-5027	A-42375-0492	20	22-28-5207	A-42375-0510
3	22-28-5037	A-42375-0493	21	22-28-5217	A-42375-0511
4	22-28-5047	A-42375-0494	22	22-28-5227	A-42375-0512
5	22-28-5057	A-42375-0495	23	22-28-5237	A-42375-0513
6	22-28-5067	A-42375-0496	24	22-28-5247	A-42375-0514
7	22-28-5077	A-42375-0497	25	22-28-5257	A-42375-0515
8	22-28-5087	A-42375-0498	26	22-28-5267	A-42375-0516
9	22-28-5097	A-42375-0499	27	22-28-5277	A-42375-0517
10	22-28-5107	A-42375-0500	28	22-28-5287	A-42375-0518
11	22-28-5117	A-42375-0501	29	22-28-5297	A-42375-0519
12	22-28-5127	A-42375-0502	30	22-28-5307	A-42375-0520
13	22-28-5137	A-42375-0503	31	22-28-5317	A-42375-0521
14	22-28-5147	A-42375-0504	32	22-28-5327	A-42375-0522
15	22-28-5157	A-42375-0505	33	22-28-5337	A-42375-0523
16	22-28-5167	A-42375-0506	34	22-28-5347	A-42375-0524
17	22-28-5177	A-42375-0507	35	22-28-5357	A-42375-0525
18	22-28-5187	A-42375-0508	36	22-28-5367	A-42375-0526
19	22-28-5197	A-42375-0509			

ENG. NO: A-42375-0527/0561					
HEADER NUMBER:			42312-0036		
PIN NUMBER:			42663-ARA154		
PIN LENGTH: L			.520 / 13.21		
MATING LENGTH: M			.295 / 7.49		
GOLD POINT: G			N/A		
PC TAIL LENGTH: P			.135 / 3.43		
TIN: T			OVERALL		
CKTS:			2-36		
KINKS:			SMES-42003		
VOIDED CKTS:			NONE		
PACKAGING:			BULK PK-40873-0041		
CKTS	MATERIAL NUMBER	ENG NUMBER	CKTS	MATERIAL NUMBER	ENG NUMBER
2	22-28-5022	A-42375-0527	20	22-28-5202	A-42375-0545
3	22-28-5032	A-42375-0528	21	22-28-5212	A-42375-0546
4	22-28-5042	A-42375-0529	22	22-28-5222	A-42375-0547
5	22-28-5052	A-42375-0530	23	22-28-5232	A-42375-0548
6	22-28-5062	A-42375-0531	24	22-28-5242	A-42375-0549
7	22-28-5072	A-42375-0532	25	22-28-5252	A-42375-0550
8	22-28-5082	A-42375-0533	26	22-28-5262	A-42375-0551
9	22-28-5092	A-42375-0534	27	22-28-5272	A-42375-0552
10	22-28-5102	A-42375-0435	28	22-28-5282	A-42375-0553
11	22-28-5112	A-42375-0536	29	22-28-5292	A-42375-0554
12	22-28-5122	A-42375-0537	30	22-28-5302	A-42375-0555
13	22-28-5132	A-42375-0538	31	22-28-5312	A-42375-0556
14	22-28-5142	A-42375-0539	32	22-28-5322	A-42375-0557
15	22-28-5152	A-42375-0540	33	22-28-5332	A-42375-0558
16	22-28-5162	A-42375-0541	34	22-28-5342	A-42375-0559
17	22-28-5172	A-42375-0542	35	22-28-5352	A-42375-0560
18	22-28-5182	A-42375-0543	36	22-28-5362	A-42375-0561
19	22-28-5192	A-42375-0544			

SYMBOLS

▽ = 0
▽ = 0
▽ = 0
▽ = 0
▼ = 0
▽ = 0
☒ = 0
■ = 0
▽ = 0

THIS DRAWING CONTAINS INFORMATION THAT IS PROPRIETARY TO MOLEX ELECTRONIC TECHNOLOGIES, LLC AND SHOULD NOT BE USED WITHOUT WRITTEN PERMISSION

DIMENSION UNITS: MM/IN | SCALE: 1:1

GENERAL TOLERANCES (UNLESS SPECIFIED)

	MM	INCH
4 PLACES	±	±
3 PLACES	±	± 0.01
2 PLACES	± 0.25	±
1 PLACE	± 0.38	±
0 PLACES	±	±
ANGULAR TOL	± 0.5 °	

DRAFT WHERE APPLICABLE MUST REMAIN WITHIN DIMENSIONS

CURRENT REV DESC: GOLD LENGTH SPEC CHANGED AS MIN 2.54- MAX 5.54 FOR A-42375-0037/0071

EC NO: 689596
DRWN: SHRUTJ 2021/09/14
CHK'D: SHRUTJ 2021/12/20
APPR: ISHWARG 2021/12/20

INITIAL REVISION:
DRWN: SCHAFER 2003/02/11
APPR: MARGULIS 2004/02/27

THIRD ANGLE PROJECTION | DRAWING: B-SIZE | SERIES: 42375

molex

KK 100 HEADER ASSY
FLAT VERTICAL BREAKAWAY

PRODUCT CUSTOMER DRAWING

DOCUMENT NUMBER	DOC TYPE	DOC PART	REVISION
SD-42375-001	PSD	001	V

MATERIAL NUMBER	CUSTOMER	SHEET NUMBER
SEE CHART	GENERAL MARKET	9 OF 35

DOCUMENT STATUS	P1	RELEASE DATE	2021/12/20 12:18:33

FORMAT: Eng-lega-master-tb-prod-B
REVISION: D
DATE: 2018/01/18

ENG. NO: A-42375-0562/0596					
HEADER NUMBER:			42312-0036		
PIN NUMBER:			42663-ARB208		
PIN LENGTH: L			.520 / 13.21		
MATING LENGTH: M			.295 / 7.49		
GOLD POINT: G			140 / 3.56		
PC TAIL LENGTH: P			.135 / 3.43		
TIN: T			.135 / 3.43		
CKTS:			2-36		
KINKS:			SMES-42003		
VOIDED CKTS:			NONE		
PACKAGING:			BULK PK-40873-0041		
CKTS	MATERIAL NUMBER	ENG NUMBER	CKTS	MATERIAL NUMBER	ENG NUMBER
2	22-28-5025	A-42375-0562	20	22-28-5205	A-42375-0580
3	22-28-5035	A-42375-0563	21	22-28-5215	A-42375-0581
4	22-28-5045	A-42375-0564	22	22-28-5225	A-42375-0582
5	22-28-5055	A-42375-0565	23	22-28-5235	A-42375-0583
6	22-28-5065	A-42375-0566	24	22-28-5245	A-42375-0584
7	22-28-5075	A-42375-0567	25	22-28-5255	A-42375-0585
8	22-28-5085	A-42375-0568	26	22-28-5265	A-42375-0586
9	22-28-5095	A-42375-0569	27	22-28-5275	A-42375-0587
10	22-28-5105	A-42375-0570	28	22-28-5285	A-42375-0588
11	22-28-5115	A-42375-0571	29	22-28-5295	A-42375-0589
12	22-28-5125	A-42375-0572	30	22-28-5305	A-42375-0590
13	22-28-5135	A-42375-0573	31	22-28-5315	A-42375-0591
14	22-28-5145	A-42375-0574	32	22-28-5325	A-42375-0592
15	22-28-5155	A-42375-0575	33	22-28-5335	A-42375-0593
16	22-28-5165	A-42375-0576	34	22-28-5345	A-42375-0594
17	22-28-5175	A-42375-0577	35	22-28-5355	A-42375-0595
18	22-28-5185	A-42375-0578	36	22-28-5365	A-42375-0596
19	22-28-5195	A-42375-0579			

ENG. NO: A-42375-0597/0631					
HEADER NUMBER:			42312-0036		
PIN NUMBER:			42663-ARB208		
PIN LENGTH: L			.520 / 13.21		
MATING LENGTH: M			.295 / 7.49		
GOLD POINT: G			140 / 3.56		
PC TAIL LENGTH: P			.135 / 3.43		
TIN: T			.135 / 3.43		
CKTS:			2-36		
KINKS:			SMES-42003		
VOIDED CKTS:			NONE		
PACKAGING:			BULK PK-40873-0041		
CKTS	MATERIAL NUMBER	ENG NUMBER	CKTS	MATERIAL NUMBER	ENG NUMBER
2	22-28-5028	A-42375-0597	20	22-28-5208	A-42375-0615
3	22-28-5038	A-42375-0598	21	22-28-5218	A-42375-0616
4	22-28-5048	A-42375-0599	22	22-28-5228	A-42375-0617
5	22-28-5058	A-42375-0600	23	22-28-5238	A-42375-0618
6	22-28-5068	A-42375-0601	24	22-28-5248	A-42375-0619
7	22-28-5078	A-42375-0602	25	22-28-5258	A-42375-0620
8	22-28-5088	A-42375-0603	26	22-28-5268	A-42375-0621
9	22-28-5098	A-42375-0604	27	22-28-5278	A-42375-0622
10	22-28-5108	A-42375-0605	28	22-28-5288	A-42375-0623
11	22-28-5118	A-42375-0606	29	22-28-5298	A-42375-0624
12	22-28-5128	A-42375-0607	30	22-28-5308	A-42375-0625
13	22-28-5138	A-42375-0608	31	22-28-5318	A-42375-0626
14	22-28-5148	A-42375-0609	32	22-28-5328	A-42375-0627
15	22-28-5158	A-42375-0610	33	22-28-5338	A-42375-0628
16	22-28-5168	A-42375-0611	34	22-28-5348	A-42375-0629
17	22-28-5178	A-42375-0612	35	22-28-5358	A-42375-0630
18	22-28-5188	A-42375-0613	36	22-28-5368	A-42375-0631
19	22-28-5198	A-42375-0614			

SYMBOLS
▽F = 0
▽E = 0
▽B = 0
▽ = 0
▼ = 0
▽ = 0
☒ = 0
■ = 0
▽ = 0

THIS DRAWING CONTAINS INFORMATION THAT IS PROPRIETARY TO MOLEX ELECTRONIC TECHNOLOGIES, LLC AND SHOULD NOT BE USED WITHOUT WRITTEN PERMISSION

DIMENSION UNITS: MM/IN
SCALE: 1:1

GENERAL TOLERANCES (UNLESS SPECIFIED)

	MM	INCH
4 PLACES	±	±
3 PLACES	±	± 0.01
2 PLACES	± 0.25	±
1 PLACE	± 0.38	±
0 PLACES	±	±
ANGULAR TOL	± 0.5 °	

DRAFT WHERE APPLICABLE MUST REMAIN WITHIN DIMENSIONS

CURRENT REV DESC: GOLD LENGTH SPEC CHANGED AS MIN 2.54- MAX 5.54 FOR A-42375-0037/0071

EC NO: 689596
DRWN: SHRUTJ 2021/09/14
CHK'D: SHRUTJ 2021/12/20
APPR: ISHWARG 2021/12/20

INITIAL REVISION:
DRWN: SCHAFER 2003/02/11
APPR: MARGULIS 2004/02/27

THIRD ANGLE PROJECTION
DRAWING: B-SIZE
SERIES: 42375

molex

KK 100 HEADER ASSY
FLAT VERTICAL BREAKAWAY

PRODUCT CUSTOMER DRAWING

DOCUMENT NUMBER	DOC TYPE	DOC PART	REVISION
SD-42375-001	PSD	001	V

MATERIAL NUMBER	CUSTOMER	SHEET NUMBER
SEE CHART	GENERAL MARKET	10 OF 35

DOCUMENT STATUS	P1	RELEASE DATE	2021/12/20 12:18:33

FORMAT: Eng-lega-master-tb-prod-B
REVISION: D
DATE: 2018/01/18

ENG. NO: A-42375-0667/0699					
HEADER NUMBER:			42312-0036		
PIN NUMBER:			42663-ABB208		
PIN LENGTH: L			.455 / 11.56		
MATING LENGTH: M			.240 / 6.09		
GOLD POINT: G			.100 / 2.54		
PC TAIL LENGTH: P			.125 / 3.18		
TIN: T			.100 / 2.54		
CKTS:			4-36		
KINKS:			NO		
VOIDED CKTS:			4		
PACKAGING:			BULK PK-40873-0041		
CKTS	MATERIAL NUMBER	ENG NUMBER	CKTS	MATERIAL NUMBER	ENG NUMBER
2			20	42375-0683	A-42375-0683
3			21	42375-0684	A-42375-0684
4	42375-0667	A-42375-0667	22	42375-0685	A-42375-0685
5	42375-0668	A-42375-0668	23	42375-0686	A-42375-0686
6	22-30-3060	A-42375-0669	24	42375-0687	A-42375-0687
7	42375-0670	A-42375-0670	25	42375-0688	A-42375-0688
8	42375-0671	A-42375-0671	26	42375-0689	A-42375-0689
9	42375-0672	A-42375-0672	27	42375-0690	A-42375-0690
10	42375-0673	A-42375-0673	28	42375-0691	A-42375-0691
11	42375-0674	A-42375-0674	29	42375-0692	A-42375-0692
12	22-30-3120	A-42375-0675	30	42375-0693	A-42375-0693
13	42375-0676	A-42375-0676	31	42375-0694	A-42375-0694
14	42375-0677	A-42375-0677	32	42375-0695	A-42375-0695
15	42375-0678	A-42375-0678	33	42375-0696	A-42375-0696
16	42375-0679	A-42375-0679	34	42375-0697	A-42375-0697
17	42375-0680	A-42375-0680	35	42375-0698	A-42375-0698
18	42375-0681	A-42375-0681	36	42375-0699	A-42375-0699
19	42375-0682	A-42375-0682			

ENG. NO: A-42375-0700/0732					
HEADER NUMBER:			42312-0036		
PIN NUMBER:			42663-ADB208		
PIN LENGTH: L			.465 /11.81		
MATING LENGTH: M			.240 / 6.09		
GOLD POINT: G			.100 / 2.54		
PC TAIL LENGTH: P			.135 / 3.43		
TIN: T			.100 / 2.54		
CKTS:			4-36		
KINKS:			SMES-42003		
VOIDED CKTS:			4		
PACKAGING:			BULK PK-40873-0041		
CKTS	MATERIAL NUMBER	ENG NUMBER	CKTS	MATERIAL NUMBER	ENG NUMBER
2			20	42375-0716	A-42375-0716
3			21	42375-0717	A-42375-0717
4	42375-0700	A-42375-0700	22	42375-0718	A-42375-0718
5	42375-0701	A-42375-0701	23	42375-0719	A-42375-0719
6	22-30-3061	A-42375-0702	24	42375-0720	A-42375-0720
7	42375-0703	A-42375-0703	25	42375-0721	A-42375-0721
8	42375-0704	A-42375-0704	26	42375-0722	A-42375-0722
9	42375-0705	A-42375-0705	27	42375-0723	A-42375-0723
10	42375-0706	A-42375-0706	28	42375-0724	A-42375-0724
11	42375-0707	A-42375-0707	29	42375-0725	A-42375-0725
12	42375-0708	A-42375-0708	30	42375-0726	A-42375-0726
13	42375-0709	A-42375-0709	31	42375-0727	A-42375-0727
14	42375-0710	A-42375-0710	32	42375-0728	A-42375-0728
15	42375-0711	A-42375-0711	33	42375-0729	A-42375-0729
16	42375-0712	A-42375-0712	34	42375-0730	A-42375-0730
17	42375-0713	A-42375-0713	35	42375-0731	A-42375-0731
18	42375-0714	A-42375-0714	36	42375-0732	A-42375-0732
19	42375-0715	A-42375-0715			

SYMBOLS	
▽ = 0	
▽ = 0	
▽ = 0	
▽ = 0	
▼ = 0	
▽ = 0	
☒ = 0	
■ = 0	
▽ = 0	

THIS DRAWING CONTAINS INFORMATION THAT IS PROPRIETARY TO MOLEX ELECTRONIC TECHNOLOGIES, LLC AND SHOULD NOT BE USED WITHOUT WRITTEN PERMISSION

DIMENSION UNITS	SCALE
MM/IN	1:1

GENERAL TOLERANCES (UNLESS SPECIFIED)

	MM	INCH
4 PLACES	±	±
3 PLACES	±	± 0.01
2 PLACES	± 0.25	±
1 PLACE	± 0.38	±
0 PLACES	±	±
ANGULAR TOL	± 0.5 °	

DRAFT WHERE APPLICABLE MUST REMAIN WITHIN DIMENSIONS

CURRENT REV DESC: GOLD LENGTH SPEC CHANGED AS MIN 2.54- MAX 5.54 FOR A-42375-0037/0071

EC NO: 689596

DRWN:	SHRUTJ	2021/09/14
CHK'D:	SHRUTJ	2021/12/20
APPR:	ISHWARG	2021/12/20

INITIAL REVISION:

DRWN:	SCHAFER	2003/02/11
APPR:	MARGULIS	2004/02/27

THIRD ANGLE PROJECTION

DRAWING	SERIES
B-SIZE	42375

molex

KK 100 HEADER ASSY
FLAT VERTICAL BREAKAWAY

PRODUCT CUSTOMER DRAWING

DOCUMENT NUMBER	DOC TYPE	DOC PART	REVISION
SD-42375-001	PSD	001	V

MATERIAL NUMBER	CUSTOMER	SHEET NUMBER
SEE CHART	GENERAL MARKET	11 OF 35

DOCUMENT STATUS	P1	RELEASE DATE	2021/12/20 12:18:33

FORMAT: Eng-lega-master-tb-prod-B
REVISION: D
DATE: 2018/01/18

ENG. NO: A-42375-0836/0870					
HEADER NUMBER:			42312-0036		
PIN NUMBER:			42663-BSA154		
PIN LENGTH: L			.630 / 16.00		
MATING LENGTH: M			.405/10.29		
GOLD POINT: G			N/A		
PC TAIL LENGTH: P			.135 / 3.43		
TIN: T			OVERALL		
CKTS:			2-36		
KINKS:			SMES-42003		
VOIDED CKTS:			NONE		
PACKAGING:			BULK PK-40873-0041		
CKTS	MATERIAL NUMBER	ENG NUMBER	CKTS	MATERIAL NUMBER	ENG NUMBER
2		A-42375-0836	20	22-30-3203	A-42375-0854
3	22-28-3033	A-42375-0837	21	22-30-3213	A-42375-0855
4	22-28-3043	A-42375-0838	22	22-30-3223	A-42375-0856
5	22-28-3053	A-42375-0839	23	22-30-3233	A-42375-0857
6	22-28-3063	A-42375-0840	24	22-30-3243	A-42375-0858
7	22-28-3073	A-42375-0841	25	22-30-3253	A-42375-0859
8	22-28-3083	A-42375-0842	26	22-30-3263	A-42375-0860
9	22-28-3093	A-42375-0843	27	22-30-3273	A-42375-0861
10	22-30-3103	A-42375-0844	28	22-30-3283	A-42375-0862
11	22-30-3113	A-42375-0845	29	22-30-3293	A-42375-0863
12	22-30-3123	A-42375-0846	30	22-30-3303	A-42375-0864
13	22-30-3133	A-42375-0847	31	22-30-3313	A-42375-0865
14	22-30-3143	A-42375-0848	32	22-30-3323	A-42375-0866
15	22-30-3153	A-42375-0849	33	22-30-3333	A-42375-0867
16	22-30-3163	A-42375-0850	34	22-30-3343	A-42375-0868
17	22-30-3173	A-42375-0851	35	22-30-3353	A-42375-0869
18	22-30-3183	A-42375-0852	36	22-30-3363	A-42375-0870
19	22-30-3193	A-42375-0853			

SYMBOLS
= 0
= 0
= 0
= 0
= 0
= 0
= 0
= 0
= 0

THIS DRAWING CONTAINS INFORMATION THAT IS PROPRIETARY TO MOLEX ELECTRONIC TECHNOLOGIES, LLC AND SHOULD NOT BE USED WITHOUT WRITTEN PERMISSION

DIMENSION UNITS: MM/IN
SCALE: 1:1

GENERAL TOLERANCES (UNLESS SPECIFIED)

	MM	INCH
4 PLACES	±	±
3 PLACES	±	± 0.01
2 PLACES	± 0.25	±
1 PLACE	± 0.38	±
0 PLACES	±	±
ANGULAR TOL	± 0.5 °	

DRAFT WHERE APPLICABLE MUST REMAIN WITHIN DIMENSIONS

CURRENT REV DESC: GOLD LENGTH SPEC CHANGED AS MIN 2.54- MAX 5.54 FOR A-42375-0037/0071

EC NO: 689596
DRWN: SHRUTJ 2021/09/14
CHK'D: SHRUTJ 2021/12/20
APPR: ISHWARG 2021/12/20

INITIAL REVISION:
DRWN: SCHAFER 2003/02/11
APPR: MARGULIS 2004/02/27

THIRD ANGLE PROJECTION
DRAWING: B-SIZE
SERIES: 42375

molex

KK 100 HEADER ASSY
FLAT VERTICAL BREAKAWAY

PRODUCT CUSTOMER DRAWING

DOCUMENT NUMBER	DOC TYPE	DOC PART	REVISION
SD-42375-001	PSD	001	V

MATERIAL NUMBER	CUSTOMER	SHEET NUMBER
SEE CHART	GENERAL MARKET	12 OF 35

DOCUMENT STATUS	P1	RELEASE DATE	2021/12/20 12:18:33

FORMAT: Eng-lega-master-tb-prod-B
REVISION: D
DATE: 2018/01/18

ENG. NO: A-42375-0871/0904					
HEADER NUMBER:			42312-0036		
PIN NUMBER:			42663-ATA154		
PIN LENGTH: L			.530 / 13.46		
MATING LENGTH: M			.320 / 8.13		
GOLD POINT: G			N/A		
PC TAIL LENGTH: P			.120 / 3.05		
TIN: T			OVERALL		
CKTS:			3-36		
KINKS:			NO		
VOIDED CKTS:			2		
PACKAGING:			BULK PK-40873-0041		
CKTS	MATERIAL NUMBER	ENG NUMBER	CKTS	MATERIAL NUMBER	ENG NUMBER
2			20	22-30-3204	A-42375-0888
3	22-28-3034	A-42375-0871	21	22-30-3214	A-42375-0889
4	22-28-3044	A-42375-0872	22	22-30-3224	A-42375-0890
5	22-28-3054	A-42375-0873	23	22-30-3234	A-42375-0891
6	22-28-3064	A-42375-08474	24	22-30-3244	A-42375-0892
7	22-28-3074	A-42375-0875	25	22-30-3254	A-42375-0893
8	22-28-3084	A-42375-0876	26	22-30-3264	A-42375-0894
9	22-28-3094	A-42375-0877	27	22-30-3274	A-42375-0895
10	22-30-3104	A-42375-0878	28	22-30-3284	A-42375-0896
11	22-30-3114	A-42375-0879	29	22-30-3294	A-42375-0897
12	22-30-3124	A-42375-0880	30	22-30-3304	A-42375-0898
13	22-30-3134	A-42375-0881	31	22-30-3314	A-42375-0899
14	22-30-3144	A-42375-0882	32	22-30-3324	A-42375-0900
15	22-30-3154	A-42375-0883	33	22-30-3334	A-42375-0901
16	22-30-3164	A-42375-0884	34	22-30-3344	A-42375-0902
17	22-30-3174	A-42375-0885	35	22-30-3354	A-42375-0903
18	22-30-3184	A-42375-0886	36	22-30-3364	A-42375-0904
19	22-30-3194	A-42375-0887			

ENG. NO: A-42375-0973/1001					
HEADER NUMBER:			42312-0036		
PIN NUMBER:			42663-ABA154		
PIN LENGTH: L			.455 / 11.56		
MATING LENGTH: M			.240 / 6.09		
GOLD POINT: G			N/A		
PC TAIL LENGTH: P			.125 / 3.18		
TIN: T			OVERALL		
CKTS:			8-36		
KINKS:			NO		
VOIDED CKTS:			3,8		
PACKAGING:			BULK PK-40873-0041		
CKTS	MATERIAL NUMBER	ENG NUMBER	CKTS	MATERIAL NUMBER	ENG NUMBER
2			20	42375-0985	A-42375-0985
3			21	42375-0986	A-42375-0986
4			22	42375-0987	A-42375-0987
5			23	42375-0988	A-42375-0988
6			24	42375-0989	A-42375-0989
7			25	42375-0990	A-42375-0990
8	42375-0973	A-42375-0973	26	42375-0991	A-42375-0991
9	42375-0974	A-42375-0974	27	42375-0992	A-42375-0992
10	22-30-3107	A-42375-0975	28	42375-0993	A-42375-0993
11	42375-0976	A-42375-0976	29	42375-0994	A-42375-0994
12	42375-0977	A-42375-0977	30	42375-0995	A-42375-0995
13	42375-0978	A-42375-0978	31	42375-0996	A-42375-0996
14	42375-0979	A-42375-0979	32	42375-0997	A-42375-0997
15	42375-0980	A-42375-0980	33	42375-0998	A-42375-0998
16	42375-0981	A-42375-0981	34	42375-0999	A-42375-0999
17	42375-0982	A-42375-0982	35	42375-1000	A-42375-1000
18	42375-0983	A-42375-0983	36	42375-1001	A-42375-1001
19	42375-0984	A-42375-0984			

SYMBOLS	
E = 0	
E = 0	
E = 0	
S = 0	
▼ = 0	
V = 0	
☒ = 0	
■ = 0	
V = 0	

THIS DRAWING CONTAINS INFORMATION THAT IS PROPRIETARY TO MOLEX ELECTRONIC TECHNOLOGIES, LLC AND SHOULD NOT BE USED WITHOUT WRITTEN PERMISSION

DIMENSION UNITS	SCALE
MM/IN	1:1

GENERAL TOLERANCES (UNLESS SPECIFIED)

	MM	INCH
4 PLACES	±	±
3 PLACES	±	± 0.01
2 PLACES	± 0.25	±
1 PLACE	± 0.38	±
0 PLACES	±	±
ANGULAR TOL	± 0.5 °	

DRAFT WHERE APPLICABLE MUST REMAIN WITHIN DIMENSIONS

CURRENT REV DESC: GOLD LENGTH SPEC CHANGED AS MIN 2.54- MAX 5.54 FOR A-42375-0037/0071

EC NO: 689596
DRWN: SHRUTJ 2021/09/14
CHK'D: SHRUTJ 2021/12/20
APPR: ISHWARG 2021/12/20

INITIAL REVISION:
DRWN: SCHAFER 2003/02/11
APPR: MARGULIS 2004/02/27

THIRD ANGLE PROJECTION | DRAWING: B-SIZE | SERIES: 42375

molex

KK 100 HEADER ASSY
FLAT VERTICAL BREAKAWAY

PRODUCT CUSTOMER DRAWING

DOCUMENT NUMBER	DOC TYPE	DOC PART	REVISION
SD-42375-001	PSD	001	V

MATERIAL NUMBER	CUSTOMER	SHEET NUMBER
SEE CHART	GENERAL MARKET	13 OF 35

DOCUMENT STATUS	P1	RELEASE DATE	2021/12/20 12:18:33

FORMAT: Eng-lega-master-tb-prod-B
REVISION: D
DATE: 2018/01/18

ENG. NO: A-42375-1105/1139					
HEADER NUMBER:			42312-0036		
PIN NUMBER:			42663-ABB208		
PIN LENGTH: L			.455 / 11.56		
MATING LENGTH: M			.240 / 6.09		
GOLD POINT: G			.100 / 2.54		
PC TAIL LENGTH: P			.125 / 3.18		
TIN: T			.100 / 2.54		
CKTS:			2-36		
KINKS:			NO		
VOIDED CKTS:			4		
PACKAGING:			BULK PK-40873-0041		
CKTS	MATERIAL NUMBER	ENG NUMBER	CKTS	MATERIAL NUMBER	ENG NUMBER
2	42375-1105	A-42375-1105	20	42375-1123	A-42375-1123
3	42375-1106	A-42375-1106	21	42375-1124	A-42375-1124
4	42375-1107	A-42375-1107	22	42375-1125	A-42375-1125
5	42375-1108	A-42375-1108	23	42375-1126	A-42375-1126
6	42375-1109	A-42375-1109	24	42375-1127	A-42375-1127
7	42375-1110	A-42375-1110	25	42375-1128	A-42375-1128
8	42375-1111	A-42375-1111	26	42375-1129	A-42375-1129
9	42375-1112	A-42375-1112	27	42375-1130	A-42375-1130
10	42375-1113	A-42375-1113	28	42375-1131	A-42375-1131
11	42375-1114	A-42375-1114	29	42375-1132	A-42375-1132
12	42375-1115	A-42375-1115	30	42375-1133	A-42375-1133
13	42375-1116	A-42375-1116	31	42375-1134	A-42375-1134
14	42375-1117	A-42375-1117	32	42375-1135	A-42375-1135
15	42375-1118	A-42375-1118	33	42375-1136	A-42375-1136
16	42375-1119	A-42375-1119	34	42375-1137	A-42375-1137
17	42375-1120	A-42375-1120	35	42375-1138	A-42375-1138
18	42375-1121	A-42375-1121	36	42375-1139	A-42375-1139
19	42375-1122	A-42375-1122			

ENG. NO: 42375-1244/1278			
HEADER NUMBER:	42312-0036		
PIN NUMBER:	42663-ABA154		
PIN LENGTH: L	.455 / 11.56		
MATING LENGTH: M	.240 / 6.09		
GOLD POINT: G	N/A		
PC TAIL LENGTH: P	.125 / 3.18		
TIN: T	OVERALL		
CKTS:	2-36		
KINKS:	NO		
VOIDED CKTS:	2		
PACKAGING:	BULK PK-40873-0041		
CKTS	ITEM NUMBER	CKTS	MATERIAL NUMBER
2	42375-1244	20	42375-1262
3	42375-1245	21	42375-1263
4	42375-1246	22	42375-1264
5	42375-1247	23	42375-1265
6	42375-1248	24	42375-1266
7	42375-1249	25	42375-1267
8	42375-1250	26	42375-1268
9	42375-1251	27	42375-1269
10	42375-1252	28	42375-1270
11	42375-1253	29	42375-1271
12	42375-1254	30	42375-1272
13	42375-1255	31	42375-1273
14	42375-125 6	32	42375-1274
15	42375-1257	33	42375-1275
16	42375-1258	34	42375-1276
17	42375-1259	35	42375-1277
18	42375-1260	36	42375-1278
19	42375-1261		

SYMBOLS
= 0
= 0
= 0
= 0
= 0
= 0
= 0
= 0
= 0

THIS DRAWING CONTAINS INFORMATION THAT IS PROPRIETARY TO MOLEX ELECTRONIC TECHNOLOGIES, LLC AND SHOULD NOT BE USED WITHOUT WRITTEN PERMISSION

DIMENSION UNITS: MM/IN | SCALE: 1:1

GENERAL TOLERANCES (UNLESS SPECIFIED)

	MM	INCH
4 PLACES	±	±
3 PLACES	±	± 0.01
2 PLACES	± 0.25	±
1 PLACE	± 0.38	±
0 PLACES	±	±
ANGULAR TOL	± 0.5 °	

DRAFT WHERE APPLICABLE MUST REMAIN WITHIN DIMENSIONS

CURRENT REV DESC: GOLD LENGTH SPEC CHANGED AS MIN 2.54- MAX 5.54 FOR A-42375-0037/0071

EC NO: 689596
DRWN: SHRUTJ 2021/09/14
CHK'D: SHRUTJ 2021/12/20
APPR: ISHWARG 2021/12/20

INITIAL REVISION:
DRWN: SCHAFER 2003/02/11
APPR: MARGULIS 2004/02/27

THIRD ANGLE PROJECTION | DRAWING: B-SIZE | SERIES: 42375

molex

KK 100 HEADER ASSY
FLAT VERTICAL BREAKAWAY

PRODUCT CUSTOMER DRAWING

DOCUMENT NUMBER	DOC TYPE	DOC PART	REVISION
SD-42375-001	PSD	001	V

MATERIAL NUMBER	CUSTOMER	SHEET NUMBER
SEE CHART	GENERAL MARKET	14 OF 35

DOCUMENT STATUS	P1	RELEASE DATE	2021/12/20 12:18:33

FORMAT: Eng-lega-master-tb-prod-B
REVISION: D
DATE: 2018/01/18

ENG. NO: 42375-1349/1382			
HEADER NUMBER:	42312-0036		
PIN NUMBER:	42663-ABA154		
PIN LENGTH: L	.455 / 11.56		
MATING LENGTH: M	.230 / 5.84		
GOLD POINT: G	N/A		
PC TAIL LENGTH: P	.135 / 3.43		
TIN: T	OVERALL		
CKTS:	3-36		
KINKS:	SMES-42003		
VOIDED CKTS:	2		
PACKAGING:	BULK PK-40873-0041		
CKTS	ITEM NUMBER	CKTS	ITEM NUMBER
2		20	42375-1366
3	42375-1349	21	42375-1367
4	42375-1350	22	42375-1368
5	42375-1351	23	42375-1369
6	42375-1352	24	42375-1370
7	42375-1353	25	42375-1371
8	42375-1354	26	42375-1372
9	42375-1355	27	42375-1373
10	42375-1356	28	42375-1374
11	42375-1357	29	42375-1375
12	42375-1358	30	42375-1376
13	42375-1359	31	42375-1377
14	42375-1360	32	42375-1378
15	42375-1361	33	42375-1379
16	42375-1362	34	42375-1380
17	42375-1363	35	42375-1381
18	42375-1364	36	42375-1382
19	42375-1365		

ENG. NO: 42375-1515/1548			
HEADER NUMBER:	42312-0036		
PIN NUMBER:	42663-ABB208		
PIN LENGTH: L	.455 / 11.56		
MATING LENGTH: M	.230 / 5.84		
GOLD POINT: G	.140 / 3.56		
PC TAIL LENGTH: P	.135 / 3.43		
TIN: T	.100 / 2.54		
CKTS:	3-36		
KINKS:	SMES-42003		
VOIDED CKTS:	2		
PACKAGING:	BULK PK-40873-0041		
CKTS	ITEM NUMBER	CKTS	ITEM NUMBER
2		20	42375-1532
3	42375-1515	21	42375-1533
4	42375-1516	22	42375-1534
5	42375-1517	23	42375-1535
6	42375-1518	24	42375-1536
7	42375-1519	25	42375-1537
8	42375-1520	26	42375-1538
9	42375-1521	27	42375-1539
10	42375-1522	28	42375-1540
11	42375-1523	29	42375-1541
12	42375-1524	30	42375-1542
13	42375-1525	31	42375-1543
14	42375-1526	32	42375-1544
15	42375-1527	33	42375-1545
16	42375-1528	34	42375-1546
17	42375-1529	35	42375-1547
18	42375-1530	36	42375-1548
19	42375-1531		

SYMBOLS

= 0

= 0

= 0

= 0

= 0

= 0

= 0

= 0

= 0

THIS DRAWING CONTAINS INFORMATION THAT IS PROPRIETARY TO MOLEX ELECTRONIC TECHNOLOGIES, LLC AND SHOULD NOT BE USED WITHOUT WRITTEN PERMISSION

DIMENSION UNITS: MM/IN | SCALE: 1:1

GENERAL TOLERANCES (UNLESS SPECIFIED)

	MM	INCH
4 PLACES	±	±
3 PLACES	±	± 0.01
2 PLACES	± 0.25	±
1 PLACE	± 0.38	±
0 PLACES	±	±
ANGULAR TOL	± 0.5 °	

DRAFT WHERE APPLICABLE MUST REMAIN WITHIN DIMENSIONS

CURRENT REV DESC: GOLD LENGTH SPEC CHANGED AS MIN 2.54- MAX 5.54 FOR A-42375-0037/0071

EC NO: 689596

DRWN: SHRUTJ 2021/09/14

CHK'D: SHRUTJ 2021/12/20

APPR: ISHWARG 2021/12/20

INITIAL REVISION:

DRWN: SCHAFER 2003/02/11

APPR: MARGULIS 2004/02/27

THIRD ANGLE PROJECTION

DRAWING: B-SIZE | SERIES: 42375

molex

KK 100 HEADER ASSY
FLAT VERTICAL BREAKAWAY

PRODUCT CUSTOMER DRAWING

DOCUMENT NUMBER	DOC TYPE	DOC PART	REVISION
SD-42375-001	PSD	001	V

MATERIAL NUMBER	CUSTOMER	SHEET NUMBER
SEE CHART	GENERAL MARKET	15 OF 35

DOCUMENT STATUS	P1	RELEASE DATE	2021/12/20 12:18:33

FORMAT: Eng-lega-master-tb-prod-B
REVISION: D
DATE: 2018/01/18

ENG. NO: 42375-1720/1753			
HEADER NUMBER:		42312-0036	
PIN NUMBER:		42663-ABB208	
PIN LENGTH: L		.455 / 11.56	
MATING LENGTH: M		.240 / 6.09	
GOLD POINT: G		.140 / 3.56	
PC TAIL LENGTH: P		.125 / 3.18	
TIN: T		.100 / 2.54	
CKTS:		3-36	
KINKS:		NO	
VOIDED CKTS:		3	
PACKAGING:		BULK	PK-40873-0041
CKTS	ITEM NUMBER	CKTS	ITEM NUMBER
2		20	42375-1737
3	42375-1720	21	42375-1738
4	42375-1721	22	42375-1739
5	42375-1722	23	42375-1740
6	42375-1723	24	42375-1741
7	42375-1724	25	42375-1742
8	42375-1725	26	42375-1743
9	42375-1726	27	42375-1744
10	42375-1727	28	42375-1745
11	42375-1728	29	42375-1746
12	42375-1729	30	42375-1747
13	42375-1730	31	42375-1748
14	42375-1731	32	42375-1749
15	42375-1732	33	42375-1750
16	42375-1733	34	42375-1751
17	42375-1734	35	42375-1752
18	42375-1735	36	42375-1753
19	42375-1736		

ENG. NO: 42375-1855/1889			
HEADER NUMBER:		42312-0036	
PIN NUMBER:		42663-CJA154	
PIN LENGTH: L		.700 / 17.78	
MATING LENGTH: M		.488 / 12.40	
GOLD POINT: G		N/A	
PC TAIL LENGTH: P		.122 / 3.10	
TIN: T		OVERALL	
CKTS:		2-36	
KINKS:		NO	
VOIDED CKTS:		NONE	
PACKAGING:		BULK	PK-40873-0041
CKTS	ITEM NUMBER	CKTS	ITEM NUMBER
2	42375-1855	20	42375-1873
3	42375-1856	21	42375-1874
4	42375-1857	22	42375-1875
5	42375-1858	23	42375-1876
6	42375-1859	24	42375-1877
7	42375-1860	25	42375-1878
8	42375-1861	26	42375-1879
9	42375-1862	27	42375-1880
10	42375-1863	28	42375-1881
11	42375-1864	29	42375-1882
12	42375-1865	30	42375-1883
13	42375-1866	31	42375-1884
14	42375-1867	32	42375-1885
15	42375-1868	33	42375-1886
16	42375-1869	34	42375-1887
17	42375-1870	35	42375-1888
18	42375-1871	36	42375-1889
19	42375-1872		

SYMBOLS	
= 0	
= 0	
= 0	
= 0	
= 0	
= 0	
= 0	
= 0	
= 0	

THIS DRAWING CONTAINS INFORMATION THAT IS PROPRIETARY TO MOLEX ELECTRONIC TECHNOLOGIES, LLC AND SHOULD NOT BE USED WITHOUT WRITTEN PERMISSION

DIMENSION UNITS	SCALE
MM/IN	1:1

GENERAL TOLERANCES (UNLESS SPECIFIED)

	MM	INCH
4 PLACES	±	±
3 PLACES	±	± 0.01
2 PLACES	± 0.25	±
1 PLACE	± 0.38	±
0 PLACES	±	±
ANGULAR TOL	± 0.5 °	

DRAFT WHERE APPLICABLE MUST REMAIN WITHIN DIMENSIONS

CURRENT REV DESC: GOLD LENGTH SPEC CHANGED AS MIN 2.54- MAX 5.54 FOR A-42375-0037/0071

EC NO: 689596

DRWN: SHRUTJ 2021/09/14

CHK'D: SHRUTJ 2021/12/20

APPR: ISHWARG 2021/12/20

INITIAL REVISION:

DRWN: SCHAFER 2003/02/11

APPR: MARGULIS 2004/02/27

THIRD ANGLE PROJECTION | DRAWING: B-SIZE | SERIES: 42375

molex

KK 100 HEADER ASSY
FLAT VERTICAL BREAKAWAY

PRODUCT CUSTOMER DRAWING

DOCUMENT NUMBER	DOC TYPE	DOC PART	REVISION
SD-42375-001	PSD	001	V

MATERIAL NUMBER	CUSTOMER	SHEET NUMBER
SEE CHART	GENERAL MARKET	16 OF 35

DOCUMENT STATUS	P1	RELEASE DATE	2021/12/20 12:18:33

FORMAT: Eng-lega-master-tb-prod-B
REVISION: D
DATE: 2018/01/18

ENG. NO: 42375-1922/1956			
HEADER NUMBER:	42312-0036		
PIN NUMBER:	42663-AEA154		
PIN LENGTH: L	.700 / 17.78		
MATING LENGTH: M	.190 / 4.83		
GOLD POINT: G	N/A		
PC TAIL LENGTH: P	.190 / 4.83		
TIN: T	.200 / 5.08		
CKTS:	2-36		
KINKS:	NO		
VOIDED CKTS:	NONE		
PACKAGING:	BULK PK-40873-0041		
CKTS	ITEM NUMBER	CKTS	ITEM NUMBER
2	42375-1922	20	42375-1873
3	42375-1923	21	42375-1874
4	42375-1924	22	42375-1875
5	42375-1925	23	42375-1876
6	42375-1926	24	42375-1877
7	42375-1927	25	42375-1878
8	42375-1928	26	42375-1879
9	42375-1929	27	42375-1880
10	42375-1930	28	42375-1881
11	42375-1931	29	42375-1882
12	42375-1932	30	42375-1883
13	42375-1933	31	42375-1884
14	42375-1934	32	42375-1885
15	42375-1935	33	42375-1886
16	42375-1936	34	42375-1887
17	42375-1937	35	42375-1888
18	42375-1938	36	42375-1889
19	42375-1939		

ENG. NO: 42375-2246/2275			
HEADER NUMBER:	42312-0036		
PIN NUMBER:	42663-ABA154		
PIN LENGTH: L	.455 / 11.56		
MATING LENGTH: M	.240 / 6.09		
GOLD POINT: G	N/A		
PC TAIL LENGTH: P	.125 / 3.18		
TIN: T	OVERALL		
CKTS:	7-36		
KINKS:	NO		
VOIDED CKTS:	2,7		
PACKAGING:	BULK PK-40873-0041		
CKTS	ITEM NUMBER	CKTS	ITEM NUMBER
2		20	42375-2259
3		21	42375-2260
4		22	42375-2261
5		23	42375-2262
6		24	42375-2263
7	42375-2246	25	42375-2264
8	42375-2247	26	42375-2265
9	42375-2248	27	42375-2266
10	42375-2249	28	42375-2267
11	42375-2250	29	42375-2268
12	42375-2251	30	42375-2269
13	42375-2252	31	42375-2270
14	42375-2253	32	42375-2271
15	42375-2254	33	42375-2272
16	42375-2255	34	42375-2273
17	42375-2256	35	42375-2274
18	42375-2257	36	42375-2275
19	42375-2258		

SYMBOLS
E = 0
E = 0
E = 0
E = 0
▼ = 0
E = 0
☒ = 0
■ = 0
E = 0

THIS DRAWING CONTAINS INFORMATION THAT IS PROPRIETARY TO MOLEX ELECTRONIC TECHNOLOGIES, LLC AND SHOULD NOT BE USED WITHOUT WRITTEN PERMISSION

DIMENSION UNITS: MM/IN
SCALE: 1:1

GENERAL TOLERANCES (UNLESS SPECIFIED)

	MM	INCH
4 PLACES	±	±
3 PLACES	±	± 0.01
2 PLACES	± 0.25	±
1 PLACE	± 0.38	±
0 PLACES	±	±
ANGULAR TOL	± 0.5 °	

DRAFT WHERE APPLICABLE MUST REMAIN WITHIN DIMENSIONS

CURRENT REV DESC: GOLD LENGTH SPEC CHANGED AS MIN 2.54- MAX 5.54 FOR A-42375-0037/0071

EC NO: 689596
DRWN: SHRUTJ 2021/09/14
CHK'D: SHRUTJ 2021/12/20
APPR: ISHWARG 2021/12/20

INITIAL REVISION:
DRWN: SCHAFER 2003/02/11
APPR: MARGULIS 2004/02/27

THIRD ANGLE PROJECTION
DRAWING: B-SIZE
SERIES: 42375

molex

KK 100 HEADER ASSY
FLAT VERTICAL BREAKAWAY

PRODUCT CUSTOMER DRAWING

DOCUMENT NUMBER	DOC TYPE	DOC PART	REVISION
SD-42375-001	PSD	001	V

MATERIAL NUMBER	CUSTOMER	SHEET NUMBER
SEE CHART	GENERAL MARKET	17 OF 35

DOCUMENT STATUS	P1	RELEASE DATE	2021/12/20 12:18:33

FORMAT: Eng-lega-master-tb-prod-B
REVISION: D
DATE: 2018/01/18

ENG. NO: 42375-2486/2520			
HEADER NUMBER:	42312-0036		
PIN NUMBER:	42663-AFB208		
PIN LENGTH: L	.475 / 12.07		
MATING LENGTH: M	.232 / 5.89		
GOLD POINT: G	.150 / 3.81		
PC TAIL LENGTH: P	.153 / 3.89		
TIN: T	.100 / 2.54		
CKTS:	2-36		
KINKS:	NO		
VOIDED CKTS:	NONE		
PACKAGING:	BULK PK-40873-0041		
CKTS	ITEM NUMBER	CKTS	ITEM NUMBER
2	42375-2486	19	42375-2503
3	42375-2487	20	42375-2504
	68300-2008	21	42375-2505
4	42375-2488	22	42375-2506
5	42375-2489	23	42375-2507
6	42375-2490	24	42375-2508
7	42375-2491	25	42375-2509
8	42375-2492	26	42375-2510
9	42375-2493	27	42375-2511
10	42375-2494	28	42375-2512
11	42375-2495	29	42375-2513
12	42375-2496	30	42375-2514
13	42375-2497	31	42375-2515
14	42375-2498	32	42375-2516
15	42375-2499	33	42375-2517
16	42375-2500	34	42375-2518
17	42375-2501	35	42375-2519
18	42375-2502	36	42375-2520

ENG. NO: 42375-2521/2555			
HEADER NUMBER:	42312-0036		
PIN NUMBER:	42663-AFB228		
PIN LENGTH: L	.475 / 12.07		
MATING LENGTH: M	.232 / 5.89		
GOLD POINT: G	.150 / 3.81		
PC TAIL LENGTH: P	.153 / 3.89		
TIN: T	.100 / 2.54		
CKTS:	2-36		
KINKS:	NO		
VOIDED CKTS:	NONE		
PACKAGING:	BULK PK-40873-0041		
CKTS	ITEM NUMBER	CKTS	ITEM NUMBER
2	42375-2521	20	42375-2539
3	42375-2522	21	42375-2540
4	42375-2523	22	42375-2541
5	42375-2524	23	42375-2542
6	42375-2525	24	42375-2543
7	42375-2526	25	42375-2544
8	42375-2527	26	42375-2545
9	42375-2528	27	42375-2546
10	42375-2529	28	42375-2547
11	42375-2530	29	42375-2548
12	42375-2531	30	42375-2549
13	42375-2532	31	42375-2550
14	42375-2533	32	42375-2551
15	42375-2534	33	42375-2552
16	42375-2535	34	42375-2553
17	42375-2536	35	42375-2554
18	42375-2537	36	42375-2555
19	42375-2539		

SYMBOLS

= 0

= 0

= 0

= 0

= 0

= 0

= 0

= 0

THIS DRAWING CONTAINS INFORMATION THAT IS PROPRIETARY TO MOLEX ELECTRONIC TECHNOLOGIES, LLC AND SHOULD NOT BE USED WITHOUT WRITTEN PERMISSION

DIMENSION UNITS: MM/IN | SCALE: 1:1

GENERAL TOLERANCES (UNLESS SPECIFIED)

	MM	INCH
4 PLACES	±	±
3 PLACES	±	± 0.01
2 PLACES	± 0.25	±
1 PLACE	± 0.38	±
0 PLACES	±	±
ANGULAR TOL	± 0.5 °	

DRAFT WHERE APPLICABLE MUST REMAIN WITHIN DIMENSIONS

CURRENT REV DESC: GOLD LENGTH SPEC CHANGED AS MIN 2.54- MAX 5.54 FOR A-42375-0037/0071

EC NO: 689596

DRWN: SHRUTJ 2021/09/14

CHK'D: SHRUTJ 2021/12/20

APPR: ISHWARG 2021/12/20

INITIAL REVISION:

DRWN: SCHAFER 2003/02/11

APPR: MARGULIS 2004/02/27

THIRD ANGLE PROJECTION | DRAWING: B-SIZE | SERIES: 42375

molex

KK 100 HEADER ASSY
FLAT VERTICAL BREAKAWAY

PRODUCT CUSTOMER DRAWING

DOCUMENT NUMBER	DOC TYPE	DOC PART	REVISION
SD-42375-001	PSD	001	V

MATERIAL NUMBER	CUSTOMER	SHEET NUMBER
SEE CHART	GENERAL MARKET	18 OF 35

DOCUMENT STATUS	P1	RELEASE DATE	2021/12/20 12:18:33

FORMAT: Eng-lega-master-tb-prod-B
REVISION: D
DATE: 2018/01/18

ENG. NO: 42375-2801/2835			
HEADER NUMBER:	42312-0036		
PIN NUMBER:	42663-HDB228		
PIN LENGTH: L	1.200 / 30.48		
MATING LENGTH: M	1.000 / 25.40		
GOLD POINT: G	.200 / 5.08		
PC TAIL LENGTH: P	.110 / 2.79		
TIN: T	.200 / 5.08		
CKTS:	2-36		
KINKS:	NO		
VOIDED CKTS:	NONE		
PACKAGING:	BULK PK-40873-0043		
CKTS	ITEM NUMBER	CKTS	ITEM NUMBER
2	42375-2801	20	42375-2819
3	42375-2802	21	42375-2820
4	42375-2803	22	42375-2821
5	42375-2804	23	42375-2822
6	42375-2805	24	42375-2823
7	42375-2806	25	42375-2824
8	42375-2807	26	42375-2825
9	42375-2808	27	42375-2826
10	42375-2809	28	42375-2827
11	42375-2810	29	42375-2828
12	42375-2811	30	42375-2829
13	42375-2812	31	42375-2830
14	42375-2813	32	42375-2831
15	42375-2814	33	42375-2832
16	42375-2815	34	42375-2833
17	42375-2816	35	42375-2834
18	42375-2817	36	42375-2835
19	42375-2818		

ENG. NO: 42375-2836/2870			
HEADER NUMBER:	42312-0036		
PIN NUMBER:	42663-EMA154		
PIN LENGTH: L	.925 / 23.50		
MATING LENGTH: M	.625 / 15.88		
GOLD POINT: G	N/A		
PC TAIL LENGTH: P	.210 / 5.33		
TIN: T	OVERALL		
CKTS:	2-36		
KINKS:	NO		
VOIDED CKTS:	NONE		
PACKAGING:	BULK PK-40873-0041		
CKTS	ITEM NUMBER	CKTS	ITEM NUMBER
2	42375-2836	20	42375-2854
3	42375-2837	21	42375-2855
4	42375-2838	22	42375-2856
5	42375-2839	23	42375-2857
6	42375-2840	24	42375-2858
7	42375-2841	25	42375-2859
8	42375-2842	26	42375-2860
9	42375-2843	27	42375-2861
10	42375-2844	28	42375-2862
11	42375-2845	29	42375-2863
12	42375-2846	30	42375-2864
13	42375-2847	31	42375-2865
14	42375-2848	32	42375-2866
15	42375-2849	33	42375-2867
16	42375-2850	34	42375-2868
17	42375-2851	35	42375-2869
18	42375-2852	36	42375-2870
19	42375-2853		

SYMBOLS

= 0

= 0

= 0

= 0

= 0

= 0

= 0

= 0

= 0

THIS DRAWING CONTAINS INFORMATION THAT IS PROPRIETARY TO MOLEX ELECTRONIC TECHNOLOGIES, LLC AND SHOULD NOT BE USED WITHOUT WRITTEN PERMISSION

DIMENSION UNITS: MM/IN | SCALE: 1:1

GENERAL TOLERANCES (UNLESS SPECIFIED)

	MM	INCH
4 PLACES	±	±
3 PLACES	±	± 0.01
2 PLACES	± 0.25	±
1 PLACE	± 0.38	±
0 PLACES	±	±
ANGULAR TOL	± 0.5 °	

DRAFT WHERE APPLICABLE MUST REMAIN WITHIN DIMENSIONS

CURRENT REV DESC: GOLD LENGTH SPEC CHANGED AS MIN 2.54- MAX 5.54 FOR A-42375-0037/0071

EC NO: 689596

DRWN: SHRUTJ 2021/09/14

CHK'D: SHRUTJ 2021/12/20

APPR: ISHWARG 2021/12/20

INITIAL REVISION:

DRWN: SCHAFER 2003/02/11

APPR: MARGULIS 2004/02/27

THIRD ANGLE PROJECTION | DRAWING: B-SIZE | SERIES: 42375

molex

KK 100 HEADER ASSY
FLAT VERTICAL BREAKAWAY

PRODUCT CUSTOMER DRAWING

DOCUMENT NUMBER	DOC TYPE	DOC PART	REVISION
SD-42375-001	PSD	001	V

MATERIAL NUMBER	CUSTOMER	SHEET NUMBER
SEE CHART	GENERAL MARKET	19 OF 35

DOCUMENT STATUS	P1	RELEASE DATE	2021/12/20 12:18:33

FORMAT: Eng-lega-master-tb-prod-B
REVISION: D
DATE: 2018/01/18

ENG. NO: 42375-3044/3078			
HEADER NUMBER:	42312-0036		
PIN NUMBER:	42663-KHB208		
PIN LENGTH: L	1.430 / 36.32		
MATING LENGTH: M	.867 / 22.02		
GOLD POINT: G	.200 / 5.08		
PC TAIL LENGTH: P	.473 / 12.01		
TIN: T	.200 / 5.08		
CKTS:	2-36		
KINKS:	NO		
VOIDED CKTS:	NONE		
PACKAGING:	BULK PK-40873-0043		
CKTS	ITEM NUMBER	CKTS	ITEM NUMBER
2	42375-3044	20	42375-3062
3	42375-3045	21	42375-3063
4	42375-3046	22	42375-3064
5	42375-3047	23	42375-3065
6	42375-3048	24	42375-3066
7	42375-3049	25	42375-3067
8	42375-3050	26	42375-3068
9	42375-3051	27	42375-3069
10	42375-3052	28	42375-3070
11	42375-3053	29	42375-3071
12	42375-3054	30	42375-3072
13	42375-3055	31	42375-3073
14	42375-3056	32	42375-3074
15	42375-3057	33	42375-3075
16	42375-3058	34	42375-3076
17	42375-3059	35	42375-3077
18	42375-3060	36	42375-3078
19	42375-3061		

ENG. NO: 42375-3114/3148			
HEADER NUMBER:	42312-0036		
PIN NUMBER:	42663-BXA154		
PIN LENGTH: L	.645 / 16.38		
MATING LENGTH: M	.431 / 10.95		
GOLD POINT: G	N/A		
PC TAIL LENGTH: P	.124 / 3.15		
TIN: T	OVERALL		
CKTS:	2-36		
KINKS:	NO		
VOIDED CKTS:	NONE		
PACKAGING:	BULK PK-40873-0041		
CKTS	ITEM NUMBER	CKTS	ITEM NUMBER
2	42375-3114	20	42375-3132
3	42375-3115	21	42375-3133
4	42375-3116	22	42375-3134
5	42375-3117	23	42375-3135
6	42375-3118	24	42375-3136
7	42375-3119	25	42375-3137
8	42375-3120	26	42375-3138
9	42375-3121	27	42375-3139
10	42375-3122	28	42375-3140
11	42375-3123	29	42375-3141
12	42375-3124	30	42375-3142
13	42375-3125	31	42375-3143
14	42375-3126	32	42375-3144
15	42375-3127	33	42375-3145
16	42375-3128	34	42375-3146
17	42375-3129	35	42375-3147
18	42375-3130	36	42375-3148
19	42375-3131		

SYMBOLS
E = 0
E = 0
E = 0
E = 0
▼ = 0
E = 0
☒ = 0
■ = 0
▽ = 0

THIS DRAWING CONTAINS INFORMATION THAT IS PROPRIETARY TO MOLEX ELECTRONIC TECHNOLOGIES, LLC AND SHOULD NOT BE USED WITHOUT WRITTEN PERMISSION

DIMENSION UNITS: MM/IN
SCALE: 1:1

GENERAL TOLERANCES (UNLESS SPECIFIED)

	MM	INCH
4 PLACES	±	±
3 PLACES	±	± 0.01
2 PLACES	± 0.25	±
1 PLACE	± 0.38	±
0 PLACES	±	±
ANGULAR TOL	± 0.5 °	

DRAFT WHERE APPLICABLE MUST REMAIN WITHIN DIMENSIONS

CURRENT REV DESC: GOLD LENGTH SPEC CHANGED AS MIN 2.54- MAX 5.54 FOR A-42375-0037/0071

EC NO: 689596
DRWN: SHRUTJ 2021/09/14
CHK'D: SHRUTJ 2021/12/20
APPR: ISHWARG 2021/12/20

INITIAL REVISION:
DRWN: SCHAFER 2003/02/11
APPR: MARGULIS 2004/02/27

THIRD ANGLE PROJECTION
DRAWING: B-SIZE
SERIES: 42375

molex

KK 100 HEADER ASSY
FLAT VERTICAL BREAKAWAY

PRODUCT CUSTOMER DRAWING

DOCUMENT NUMBER	DOC TYPE	DOC PART	REVISION
SD-42375-001	PSD	001	V

MATERIAL NUMBER	CUSTOMER	SHEET NUMBER
SEE CHART	GENERAL MARKET	20 OF 35

DOCUMENT STATUS	P1	RELEASE DATE	2021/12/20 12:18:33

FORMAT: Eng-lega-master-tb-prod-B
REVISION: D
DATE: 2018/01/18

ENG. NO: 42375-3149 / 3183			
HEADER NUMBER:	42312-0036		
PIN NUMBER:	42663-BEB208		
PIN LENGTH: L	.575 / 14.61		
MATING LENGTH: M	.350 / 8.89		
GOLD POINT: G	.200 / 5.08		
PC TAIL LENGTH: P	.135 / 3.43		
TIN: T	.200 / 5.08		
CKTS:	2-36		
KINKS:	NO		
VOIDED CKTS:	NONE		
PACKAGING:	BULK PK-40873-0041		
CKTS	ITEM NUMBER	CKTS	ITEM NUMBER
2	42375-3149	20	42375-3167
3	42375-3150	21	42375-3168
4	42375-3151	22	42375-3169
5	42375-3152	23	42375-3170
6	42375-3153	24	42375-3171
7	42375-3154	25	42375-3172
8	42375-3155	26	42375-3173
9	42375-3156	27	42375-3174
10	42375-3157	28	42375-3175
11	42375-3158	29	42375-3176
12	42375-3159	30	42375-3177
13	42375-3160	31	42375-3178
14	42375-3161	32	42375-3179
15	42375-3162	33	42375-3180
16	42375-3163	34	42375-3181
17	42375-3164	35	42375-3182
18	42375-3165	36	42375-3183
19	42375-3166		

ENG. NO: 42375-3184 / 3218			
HEADER NUMBER:	42312-0036		
PIN NUMBER:	42663-GNB208		
PIN LENGTH: L	1.140 / 28.96		
MATING LENGTH: M	.913 / 23.20		
GOLD POINT: G	.200 / 5.08		
PC TAIL LENGTH: P	.137 / 3.48		
TIN: T	.200 / 5.08		
CKTS:	2-36		
KINKS:	NO		
VOIDED CKTS:	NONE		
PACKAGING:	BULK PK-40873-0043		
CKTS	ITEM NUMBER	CKTS	ITEM NUMBER
2	42375-3184	20	42375-3202
3	42375-3185	21	42375-3203
4	42375-3186	22	42375-3204
5	42375-3187	23	42375-3205
6	42375-3188	24	42375-3206
7	42375-3189	25	42375-3207
8	42375-3190	26	42375-3208
9	42375-3191	27	42375-3209
10	42375-3192	28	42375-3210
11	42375-3193	29	42375-3211
12	42375-3194	30	42375-3212
13	42375-3195	31	42375-3213
14	42375-3196	32	42375-3214
15	42375-3197	33	42375-3215
16	42375-3198	34	42375-3216
17	42375-3199	35	42375-3217
18	42375-3200	36	42375-3218
19	42375-3201		

ENG. NO: 42375-3219 / 3253			
HEADER NUMBER:	42312-0036		
PIN NUMBER:	42663-BPA154		
PIN LENGTH: L	.620 / 15.75		
MATING LENGTH: M	.280 / 7.11		
GOLD POINT: G	NA		
PC TAIL LENGTH: P	.250 / 6.35		
TIN: T	OVERALL		
CKTS:	2-36		
KINKS:	NO		
VOIDED CKTS:	NONE		
PACKAGING:	BULK PK-40873-0041		
CKTS	ITEM NUMBER	CKTS	ITEM NUMBER
2	42375-3219	20	42375-3237
3	42375-3220	21	42375-3238
4	42375-3221	22	42375-3239
5	42375-3222	23	42375-3240
6	42375-3223	24	42375-3241
7	42375-3224	25	42375-3242
8	42375-3225	26	42375-3243
9	42375-3226	27	42375-3244
10	42375-3227	28	42375-3245
11	42375-3228	29	42375-3246
12	42375-3229	30	42375-3247
13	42375-3230	31	42375-3248
14	42375-3231	32	42375-3249
15	42375-3232	33	42375-3250
16	42375-3233	34	42375-3251
17	42375-3234	35	42375-3252
18	42375-3235	36	42375-3253
19	42375-3236		

SYMBOLS

▽ = 0
▽ = 0
▽ = 0
▽ = 0
▼ = 0
▽ = 0
☒ = 0
■ = 0
▽ = 0

THIS DRAWING CONTAINS INFORMATION THAT IS PROPRIETARY TO MOLEX ELECTRONIC TECHNOLOGIES, LLC AND SHOULD NOT BE USED WITHOUT WRITTEN PERMISSION

DIMENSION UNITS: MM/IN | SCALE: 1:1

GENERAL TOLERANCES (UNLESS SPECIFIED)

	MM	INCH
4 PLACES	±	±
3 PLACES	±	± 0.01
2 PLACES	± 0.25	±
1 PLACE	± 0.38	±
0 PLACES	±	±
ANGULAR TOL	± 0.5 °	

DRAFT WHERE APPLICABLE MUST REMAIN WITHIN DIMENSIONS

CURRENT REV DESC: GOLD LENGTH SPEC CHANGED AS MIN 2.54- MAX 5.54 FOR A-42375-0037/0071

EC NO: 689596
DRWN: SHRUTJ 2021/09/14
CHK'D: SHRUTJ 2021/12/20
APPR: ISHWARG 2021/12/20

INITIAL REVISION:
DRWN: SCHAFER 2003/02/11
APPR: MARGULIS 2004/02/27

THIRD ANGLE PROJECTION | DRAWING: B-SIZE | SERIES: 42375

molex

KK 100 HEADER ASSY
FLAT VERTICAL BREAKAWAY

PRODUCT CUSTOMER DRAWING

DOCUMENT NUMBER	DOC TYPE	DOC PART	REVISION
SD-42375-001	PSD	001	V

MATERIAL NUMBER	CUSTOMER	SHEET NUMBER
SEE CHART	GENERAL MARKET	21 OF 35

DOCUMENT STATUS	P1	RELEASE DATE	2021/12/20 12:18:33

FORMAT: Eng-lega-master-tb-prod-B
REVISION: D
DATE: 2018/01/18

ENG. NO: 42375-3254 / 3288			
HEADER NUMBER:	42312-0036		
PIN NUMBER:	42663-DMA154		
PIN LENGTH: L	.820 / 20.83		
MATING LENGTH: M	.590 / 14.99		
GOLD POINT: G	NA		
PC TAIL LENGTH: P	.140 / 3.56		
TIN: T	OVERALL		
CKTS:	2-36		
KINKS:	NO		
VOIDED CKTS:	NONE		
PACKAGING:	BULK PK-40873-0041		
CKTS	ITEM NUMBER	CKTS	ITEM NUMBER
2	42375-3254	20	42375-3272
3	42375-3255	21	42375-3273
4	42375-3256	22	42375-3274
5	42375-3257	23	42375-3275
6	42375-3258	24	42375-3276
7	42375-3259	25	42375-3277
8	42375-3260	26	42375-3278
9	42375-3261	27	42375-3279
10	42375-3262	28	42375-3280
11	42375-3263	29	42375-3281
12	42375-3264	30	42375-3282
13	42375-3265	31	42375-3283
14	42375-3266	32	42375-3284
15	42375-3267	33	42375-3285
16	42375-3268	34	42375-3286
17	42375-3269	35	42375-3287
18	42375-3270	36	42375-3288
19	42375-3271		

ENG. NO: 42375-3289 / 3323			
HEADER NUMBER:	42312-0036		
PIN NUMBER:	42663-FNA154		
PIN LENGTH: L	1.035 / 26.29		
MATING LENGTH: M	.358 / 9.09		
GOLD POINT: G	NA		
PC TAIL LENGTH: P	.587 / 14.91		
TIN: T	OVERALL		
CKTS:	2-36		
KINKS:	NO		
VOIDED CKTS:	NONE		
PACKAGING:	BULK PK-40873-0043		
CKTS	ITEM NUMBER	CKTS	ITEM NUMBER
2	42375-3289	20	42375-3307
3	42375-3290	21	42375-3308
4	42375-3291	22	42375-3309
5	42375-3292	23	42375-3310
6	42375-3293	24	42375-3311
7	42375-3294	25	42375-3312
8	42375-3295	26	42375-3313
9	42375-3296	27	42375-3314
10	42375-3297	28	42375-3315
11	42375-3298	29	42375-3316
12	42375-3299	30	42375-3317
13	42375-3300	31	42375-3318
14	42375-3301	32	42375-3319
15	42375-3302	33	42375-3320
16	42375-3303	34	42375-3321
17	42375-3304	35	42375-3322
18	42375-3305	36	42375-3323
19	42375-3306		

ENG. NO: 42375-3324 / 3358			
HEADER NUMBER:	42312-0036		
PIN NUMBER:	42663-CCA154		
PIN LENGTH: L	.670 / 17.02		
MATING LENGTH: M	.440 / 11.18		
GOLD POINT: G	NA		
PC TAIL LENGTH: P	.140 / 3.56		
TIN: T	OVERALL		
CKTS:	2-36		
KINKS:	SMES-42003		
VOIDED CKTS:	NONE		
PACKAGING:	BULK PK-40873-0041		
CKTS	ITEM NUMBER	CKTS	ITEM NUMBER
2	42375-3324	20	42375-3342
3	42375-3325	21	42375-3343
4	42375-3326	22	42375-3344
5	42375-3327	23	42375-3345
6	42375-3328	24	42375-3346
7	42375-3329	25	42375-3347
8	42375-3330	26	42375-3348
9	42375-3331	27	42375-3349
10	42375-3332	28	42375-3350
11	42375-3333	29	42375-3351
12	42375-3334	30	42375-3352
13	42375-3335	31	42375-3353
14	42375-3336	32	42375-3354
15	42375-3337	33	42375-3355
16	42375-3338	34	42375-3356
17	42375-3339	35	42375-3357
18	42375-3340	36	42375-3358
19	42375-3341		

SYMBOLS

E = 0
E = 0
E = 0
E = 0
▼ = 0
E = 0
☒ = 0
■ = 0
▽ = 0

THIS DRAWING CONTAINS INFORMATION THAT IS PROPRIETARY TO MOLEX ELECTRONIC TECHNOLOGIES, LLC AND SHOULD NOT BE USED WITHOUT WRITTEN PERMISSION

DIMENSION UNITS: MM/IN
SCALE: 1:1

GENERAL TOLERANCES (UNLESS SPECIFIED)

	MM	INCH
4 PLACES	±	±
3 PLACES	±	± 0.01
2 PLACES	± 0.25	±
1 PLACE	± 0.38	±
0 PLACES	±	±
ANGULAR TOL	± 0.5 °	

DRAFT WHERE APPLICABLE MUST REMAIN WITHIN DIMENSIONS

CURRENT REV DESC: GOLD LENGTH SPEC CHANGED AS MIN 2.54- MAX 5.54 FOR A-42375-0037/0071

EC NO: 689596
DRWN: SHRUTJ 2021/09/14
CHK'D: SHRUTJ 2021/12/20
APPR: ISHWARG 2021/12/20

INITIAL REVISION:
DRWN: SCHAFER 2003/02/11
APPR: MARGULIS 2004/02/27

THIRD ANGLE PROJECTION
DRAWING: B-SIZE
SERIES: 42375

molex

KK 100 HEADER ASSY
FLAT VERTICAL BREAKAWAY

PRODUCT CUSTOMER DRAWING

DOCUMENT NUMBER	DOC TYPE	DOC PART	REVISION
SD-42375-001	PSD	001	V

MATERIAL NUMBER: SEE CHART
CUSTOMER: GENERAL MARKET
SHEET NUMBER: 22 OF 35

DOCUMENT STATUS	P1	RELEASE DATE	2021/12/20 12:18:33

FORMAT: Eng-lega-master-tb-prod-B
REVISION: D
DATE: 2018/01/18

ENG. NO: 42375-3359 / 3393			
HEADER NUMBER:	42312-0036		
PIN NUMBER:	42663-ABB228		
PIN LENGTH: L	.455 / 11.56		
MATING LENGTH: M	.170 / 4.32		
GOLD POINT: G	.100 / 2.54		
PC TAIL LENGTH: P	.195 / 4.95		
TIN: T	.100 / 2.54		
CKTS:	2-36		
KINKS:	NO		
VOIDED CKTS:	NONE		
PACKAGING:	BULK	PK-40873-0041	
CKTS	ITEM NUMBER	CKTS	ITEM NUMBER
2	42375-3359	20	42375-3377
3	42375-3360	21	42375-3378
4	42375-3361	22	42375-3379
5	42375-3362	23	42375-3380
6	42375-3363	24	42375-3381
7	42375-3364	25	42375-3382
8	42375-3365	26	42375-3383
9	42375-3366	27	42375-3384
10	42375-3367	28	42375-3385
11	42375-3368	29	42375-3386
12	42375-3369	30	42375-3387
13	42375-3370	31	42375-3388
14	42375-3371	32	42375-3389
15	42375-3372	33	42375-3390
16	42375-3373	34	42375-3391
17	42375-3374	35	42375-3392
18	42375-3375	36	42375-3393
19	42375-3376		

ENG. NO: 42375-3394 / 3428			
HEADER NUMBER:	42312-0036		
PIN NUMBER:	42663-EZB208		
PIN LENGTH: L	.970/24.64		
MATING LENGTH: M	.780/19.81		
GOLD POINT: G	.200/5.08		
PC TAIL LENGTH: P	.100/ 2.54		
TIN: T	.200/5.08		
CKTS:	2-36		
KINKS:	NO		
VOIDED CKTS:	NONE		
PACKAGING:	BULK	PK-40873-0043	
CKTS	ITEM NUMBER	CKTS	ITEM NUMBER
2	42375-3394	20	42375-3412
3	42375-3395	21	42375-3413
4	42375-3396	22	42375-3414
5	42375-3397	23	42375-3415
6	42375-3398	24	42375-3416
7	42375-3399	25	42375-3417
8	42375-3400	26	42375-3418
9	42375-3401	27	42375-3419
10	42375-3402	28	42375-3420
11	42375-3403	29	42375-3421
12	42375-3404	30	42375-3422
13	42375-3405	31	42375-3423
14	42375-3406	32	42375-3424
15	42375-3407	33	42375-3425
16	42375-3408	34	42375-3426
17	42375-3409	35	42375-3427
18	42375-3410	36	42375-3428
19	42375-3411		

ENG. NO: 42375-3429 / 3463			
HEADER NUMBER:	42312-0036		
PIN NUMBER:	42663-ARA154		
PIN LENGTH: L	.520/13.21		
MATING LENGTH: M	.386/9.80		
GOLD POINT: G	N/A		
PC TAIL LENGTH: P	.044/1.12		
TIN: T	OVERALL		
CKTS:	2-36		
KINKS:	NO		
VOIDED CKTS:	NONE		
PACKAGING:	BULK	PK-40873-0041	
CKTS	ITEM NUMBER	CKTS	ITEM NUMBER
2	42375-3429	20	42375-3447
3	42375-3430	21	42375-3448
4	42375-3431	22	42375-3449
5	42375-3432	23	42375-3450
6	42375-3433	24	42375-3451
7	42375-3434	25	42375-3452
8	42375-3435	26	42375-3453
9	42375-3436	27	42375-3454
10	42375-3437	28	42375-3455
11	42375-3438	29	42375-3456
12	42375-3439	30	42375-3457
13	42375-3440	31	42375-3458
14	42375-3441	32	42375-3459
15	42375-3442	33	42375-3460
16	42375-3443	34	42375-3461
17	42375-3444	35	42375-3462
18	42375-3445	36	42375-3463
19	42375-3446		

SYMBOLS
= 0
= 0
= 0
= 0
= 0
= 0
= 0
= 0

THIS DRAWING CONTAINS INFORMATION THAT IS PROPRIETARY TO MOLEX ELECTRONIC TECHNOLOGIES, LLC AND SHOULD NOT BE USED WITHOUT WRITTEN PERMISSION

DIMENSION UNITS	SCALE
MM/IN	1:1

GENERAL TOLERANCES (UNLESS SPECIFIED)

	MM	INCH
4 PLACES	±	±
3 PLACES	±	± 0.01
2 PLACES	± 0.25	±
1 PLACE	± 0.38	±
0 PLACES	±	±
ANGULAR TOL	± 0.5 °	

DRAFT WHERE APPLICABLE MUST REMAIN WITHIN DIMENSIONS

CURRENT REV DESC: GOLD LENGTH SPEC CHANGED AS MIN 2.54- MAX 5.54 FOR A-42375-0037/0071

EC NO: 689596

DRWN: SHRUTJ 2021/09/14

CHK'D: SHRUTJ 2021/12/20

APPR: ISHWARG 2021/12/20

INITIAL REVISION:

DRWN: SCHAFER 2003/02/11

APPR: MARGULIS 2004/02/27

THIRD ANGLE PROJECTION

DRAWING: B-SIZE

SERIES: 42375

molex

KK 100 HEADER ASSY
FLAT VERTICAL BREAKAWAY

PRODUCT CUSTOMER DRAWING

DOCUMENT NUMBER	DOC TYPE	DOC PART	REVISION
SD-42375-001	PSD	001	V

MATERIAL NUMBER	CUSTOMER	SHEET NUMBER
SEE CHART	GENERAL MARKET	23 OF 35

DOCUMENT STATUS	P1	RELEASE DATE	2021/12/20 12:18:33

FORMAT: Eng-lega-master-tb-prod-B
REVISION: D
DATE: 2018/01/18

ENG. NO: 42375-3464 / 3498			
HEADER NUMBER:	42312-0036		
PIN NUMBER:	42663-CJA154		
PIN LENGTH: L	.700/17.78		
MATING LENGTH: M	.500/12.70		
GOLD POINT: G	N/A		
PC TAIL LENGTH: P	110/2.79		
TIN: T	OVERALL		
CKTS:	2-36		
KINKS:	NO		
VOIDED CKTS:	#2		
PACKAGING:	BULK PK-40873-0041		
CKTS	ITEM NUMBER	CKTS	ITEM NUMBER
2	42375-3464	20	42375-3482
3	42375-3465	21	42375-3483
4	42375-3466	22	42375-3484
5	42375-3467	23	42375-3480 5
6	42375-3468	24	42375-3486
7	42375-3469	25	42375-3487
8	42375-3470	26	42375-3488
9	42375-3471	27	42375-3489
10	42375-3472	28	42375-34890
11	42375-3473	29	42375-3491
12	42375-3474	30	42375-3492
13	42375-3475	31	42375-3493
14	42375-3476	32	42375-3494
15	42375-3470 7	33	42375-3495
16	42375-3478	34	42375-3496
17	42375-3479	35	42375-3497
18	42375-3480	36	42375-3498
19	42375-3481		

ENG. NO: 42375-3499/3533			
HEADER NUMBER:	42312-0036		
PIN NUMBER:	42663-ETA154		
PIN LENGTH: L	.950/24.13		
MATING LENGTH: M	.750/19.05		
GOLD POINT: G	N/A		
PC TAIL LENGTH: P	110/2.79		
TIN: T	OVERALL		
CKTS:	2-36		
KINKS:	NO		
VOIDED CKTS:	NONE		
PACKAGING:	BULK PK-40873-0043		
CKTS	ITEM NUMBER	CKTS	ITEM NUMBER
2	42375-3499	20	42375-3517
3	42375-3500	21	42375-3518
4	42375-3501	22	42375-3519
5	42375-3502	23	42375-3520
6	42375-3503	24	42375-3521
7	42375-3504	25	42375-3522
8	42375-3505	26	42375-3523
9	42375-3506	27	42375-3524
10	42375-3507	28	42375-3525
11	42375-3508	29	42375-3526
12	42375-3509	30	42375-3527
13	42375-3510	31	42375-3528
14	42375-3511	32	42375-3529
15	42375-3512	33	42375-3530
16	42375-3513	34	42375-3531
17	42375-3514	35	42375-3532
18	42375-3515	36	42375-3533
19	42375-3516		

ENG. NO: 42375-3534/3568			
HEADER NUMBER:	42312-0036		
PIN NUMBER:	42663-AWB208		
PIN LENGTH: L	.535/13.59		
MATING LENGTH: M	.235/5.97		
GOLD POINT: G	.200/5.08		
PC TAIL LENGTH: P	.210/5.33		
TIN: T	.100/2.54		
CKTS:	2-36		
KINKS:	NO		
VOIDED CKTS:	NONE		
PACKAGING:	BULK PK-40873-0041		
CKTS	ITEM NUMBER	CKTS	ITEM NUMBER
2	42375-3534	20	42375-3572
3	42375-3535	21	42375-3573
4	42375-3536	22	42375-3574
5	42375-3537	23	42375-3575
6	42375-3538	24	42375-3576
7	42375-3539	25	42375-3577
8	42375-3560	26	42375-3578
9	42375-3561	27	42375-3579
10	42375-3562	28	42375-3580
11	42375-3563	29	42375-3581
12	42375-3564	30	42375-3582
13	42375-3565	31	42375-3583
14	42375-3566	32	42375-3584
15	42375-3567	33	42375-3585
16	42375-3568	34	42375-3586
17	42375-3569	35	42375-3587
18	42375-3570	36	42375-3588
19	42375-3571		

SYMBOLS
= 0
= 0
= 0
= 0
= 0
= 0
= 0
= 0
= 0

THIS DRAWING CONTAINS INFORMATION THAT IS PROPRIETARY TO MOLEX ELECTRONIC TECHNOLOGIES, LLC AND SHOULD NOT BE USED WITHOUT WRITTEN PERMISSION

DIMENSION UNITS	SCALE
MM/IN	1:1

GENERAL TOLERANCES (UNLESS SPECIFIED)

	MM	INCH
4 PLACES	±	±
3 PLACES	±	± 0.01
2 PLACES	± 0.25	±
1 PLACE	± 0.38	±
0 PLACES	±	±
ANGULAR TOL	± 0.5 °	

DRAFT WHERE APPLICABLE MUST REMAIN WITHIN DIMENSIONS

CURRENT REV DESC: GOLD LENGTH SPEC CHANGED AS MIN 2.54- MAX 5.54 FOR A-42375-0037/0071

EC NO: 689596

DRWN:	SHRUTJ	2021/09/14
CHK'D:	SHRUTJ	2021/12/20
APPR:	ISHWARG	2021/12/20

INITIAL REVISION:

DRWN:	SCHAFER	2003/02/11
APPR:	MARGULIS	2004/02/27

THIRD ANGLE PROJECTION | DRAWING: B-SIZE | SERIES: 42375

molex

KK 100 HEADER ASSY
FLAT VERTICAL BREAKAWAY

PRODUCT CUSTOMER DRAWING

DOCUMENT NUMBER	DOC TYPE	DOC PART	REVISION
SD-42375-001	PSD	001	V

MATERIAL NUMBER	CUSTOMER	SHEET NUMBER
SEE CHART	GENERAL MARKET	24 OF 35

DOCUMENT STATUS	P1	RELEASE DATE	2021/12/20 12:18:33

FORMAT: Eng-lega-master-tb-prod-B
REVISION: D
DATE: 2018/01/18

ENG. NO: A-42375-3569/3603					
HEADER NUMBER:			42312-0036		
PIN NUMBER:			42663-ABB208		
PIN LENGTH: L			.530 / 13.46		
MATING LENGTH: M			.240 / 6.09		
GOLD POINT: G			.100 / 2.54		
PC TAIL LENGTH: P			.125 / 3.18		
TIN: T			.100 / 2.54		
CKTS:			4-36		
KINKS:			NO		
VOIDED CKTS:			5		
PACKAGING:			BULK PK-40873-0041		
CKTS	MATERIAL NUMBER	ENG NUMBER	CKTS	MATERIAL NUMBER	ENG NUMBER
2			20	423753587	42375-3587
3			21	423753588	42375-3588
4			22	423753589	42375-3589
5	423753572	42375-3572	23	423753590	42375-3590
6	423753573	42375-3573	24	423753591	42375-3591
7	423753574	42375-3574	25	423753592	42375-3592
8	423753575	42375-3575	26	423753593	42375-3593
9	423753576	42375-3576	27	423753594	42375-3594
10	423753577	42375-3577	28	423753595	42375-3595
11	423753578	42375-3578	29	423753596	42375-3596
12	423753579	42375-3579	30	423753597	42375-3597
13	423753580	42375-3580	31	423753598	42375-3598
14	423753581	42375-3581	32	423753599	42375-3599
15	423753582	42375-3582	33	423753600	42375-3600
16	423753583	42375-3583	34	423753601	42375-3601
17	423753584	42375-3584	35	423753602	42375-3602
18	423753585	42375-3585	36	423753603	42375-3603
19	423753586	42375-3586			

ENG. NO: A-42375-2974/3008					
HEADER NUMBER:			42312-0036		
PIN NUMBER:			42663-FKB228		
PIN LENGTH: L			1.020 / 25.91		
MATING LENGTH: M			.805 / 20.45		
GOLD POINT: G			.200 / 5.08		
PC TAIL LENGTH: P			.125 / 3.18		
TIN: T			.200 / 5.08		
CKTS:			2-36		
KINKS:			NO		
VOIDED CKTS:			NONE		
PACKAGING:			BULK PK-40873-0043		
CKTS	MATERIAL NUMBER	ENG NUMBER	CKTS	MATERIAL NUMBER	ITEM NUMBER
2			20		
3			21		
4			22		
5	423752977	42375-2977	23		
6			24		
7			25		
8			26		
9			27		
10			28		
11			29		
12			30		
13			31		
14			32		
15			33		
16			34		
17			35		
18			36		
19					

SYMBOLS

= 0

= 0

= 0

= 0

= 0

= 0

= 0

= 0

= 0

THIS DRAWING CONTAINS INFORMATION THAT IS PROPRIETARY TO MOLEX ELECTRONIC TECHNOLOGIES, LLC AND SHOULD NOT BE USED WITHOUT WRITTEN PERMISSION

DIMENSION UNITS: MM/IN | SCALE: 1:1

GENERAL TOLERANCES (UNLESS SPECIFIED)

	MM	INCH
4 PLACES	±	±
3 PLACES	±	± 0.01
2 PLACES	± 0.25	±
1 PLACE	± 0.38	±
0 PLACES	±	±
ANGULAR TOL	± 0.5 °	

DRAFT WHERE APPLICABLE MUST REMAIN WITHIN DIMENSIONS

CURRENT REV DESC: GOLD LENGTH SPEC CHANGED AS MIN 2.54- MAX 5.54 FOR A-42375-0037/0071

EC NO: 689596

DRWN: SHRUTJ 2021/09/14

CHK'D: SHRUTJ 2021/12/20

APPR: ISHWARG 2021/12/20

INITIAL REVISION:

DRWN: SCHAFER 2003/02/11

APPR: MARGULIS 2004/02/27

THIRD ANGLE PROJECTION | DRAWING: B-SIZE | SERIES: 42375

molex

KK 100 HEADER ASSY
FLAT VERTICAL BREAKAWAY

PRODUCT CUSTOMER DRAWING

DOCUMENT NUMBER	DOC TYPE	DOC PART	REVISION
SD-42375-001	PSD	001	V

MATERIAL NUMBER	CUSTOMER	SHEET NUMBER
SEE CHART	GENERAL MARKET	25 OF 35

DOCUMENT STATUS	P1	RELEASE DATE	2021/12/20 12:18:33

FORMAT: Eng-lega-master-tb-prod-B
REVISION: D
DATE: 2018/01/18

ENG. NO: A-42375-3604/3637					
HEADER NUMBER:			42312-0036		
PIN NUMBER:			42663-AXA154		
PIN LENGTH: L			.540 / 13.72		
MATING LENGTH: M			.380 / 9.65		
GOLD POINT: G			N/A		
PC TAIL LENGTH: P			.070 / 1.78		
TIN: T			OVERALL		
CKTS:			2-36		
KINKS:			NO		
VOIDED CKTS:			2		
PACKAGING:			BULK PK-40873-0041		
CKTS	MATERIAL NUMBER	ENG NUMBER	CKTS	MATERIAL NUMBER	ENG NUMBER
2			20		
3	42375-3604		21		
4			22		
5			23		
6			24		
7			25		
8			26		
9			27		
10			28		
11			29		
12			30		
13			31		
14			32		
15			33		
16			34		
17			35		
18			36		
19					

ENG. NO: A-42375-3638/3658					
HEADER NUMBER:			42312-0036		
PIN NUMBER:			42663-ABA154		
PIN LENGTH: L			.455 / 11.56		
MATING LENGTH: M			.240 / 6.09		
GOLD POINT: G			N/A		
PC TAIL LENGTH: P			.125 / 3.18		
TIN: T			OVERALL		
CKTS:			2-36		
KINKS:			NO		
VOIDED CKTS:			2, 4, 6, 8, 10, 12, 14, 16		
PACKAGING:			BULK PK-40873-0041		
CKTS	MATERIAL NUMBER	ENG NUMBER	CKTS	MATERIAL NUMBER	ITEM NUMBER
2			20		
3			21		
4			22		
5			23		
6			24		
7			25		
8			26		
9			27		
10			28		
11			29		
12			30		
13			31		
14			32		
15			33		
16			34		
17	423753639	42375-3639	35		
18			36		
19					

SYMBOLS
= 0
= 0
= 0
= 0
= 0
= 0
= 0
= 0
= 0

THIS DRAWING CONTAINS INFORMATION THAT IS PROPRIETARY TO MOLEX ELECTRONIC TECHNOLOGIES, LLC AND SHOULD NOT BE USED WITHOUT WRITTEN PERMISSION

DIMENSION UNITS: MM/IN
SCALE: 1:1

GENERAL TOLERANCES (UNLESS SPECIFIED)

	MM	INCH
4 PLACES	±	±
3 PLACES	±	± 0.01
2 PLACES	± 0.25	±
1 PLACE	± 0.38	±
0 PLACES	±	±
ANGULAR TOL	± 0.5 °	

DRAFT WHERE APPLICABLE MUST REMAIN WITHIN DIMENSIONS

CURRENT REV DESC: GOLD LENGTH SPEC CHANGED AS MIN 2.54- MAX 5.54 FOR A-42375-0037/0071

EC NO: 689596
DRWN: SHRUTJ 2021/09/14
CHK'D: SHRUTJ 2021/12/20
APPR: ISHWARG 2021/12/20

INITIAL REVISION:
DRWN: SCHAFER 2003/02/11
APPR: MARGULIS 2004/02/27

THIRD ANGLE PROJECTION
DRAWING: B-SIZE
SERIES: 42375

molex

KK 100 HEADER ASSY
FLAT VERTICAL BREAKAWAY

PRODUCT CUSTOMER DRAWING

DOCUMENT NUMBER	DOC TYPE	DOC PART	REVISION
SD-42375-001	PSD	001	V

MATERIAL NUMBER	CUSTOMER	SHEET NUMBER
SEE CHART	GENERAL MARKET	26 OF 35

DOCUMENT STATUS	P1	RELEASE DATE	2021/12/20 12:18:33

FORMAT: Eng-lega-master-tb-prod-B
REVISION: D
DATE: 2018/01/18

ENG. NO: 42375-3659/3693					
HEADER NUMBER:			42312-0036		
PIN NUMBER:			42663-AXB208		
PIN LENGTH: L			.540 /13.72		
MATING LENGTH: M			.250 / 6.35		
GOLD POINT: G			.140 / 3.56		
PC TAIL LENGTH: P			.200 / 5.08		
TIN: T			.135 / 3.43		
CKTS:			2-36		
KINKS:			NO		
VOIDED CKTS:			NONE		
PACKAGING:			BULK PK-40873-0041		
CKTS	MATERIAL NUMBER	ENG NUMBER	CKTS	MATERIAL NUMBER	ENG NUMBER
2	68300-2000	42375-3659	20		42375-3677
3	68300-2001	42375-3660	21		42375-3678
4		42375-3661	22		42375-3679
5	68300-2006	42375-3662	23		42375-3680
6		42375-3663	24		42375-3681
7		42375-3664	25		42375-3682
8		42375-3665	26		42375-3683
9		42375-3666	27		42375-3684
10		42375-3667	28		42375-3685
11		42375-3668	29		42375-3686
12		42375-3669	30		42375-3687
13		42375-3670	31		42375-3688
14		42375-3671	32		42375-3689
15		42375-3672	33		42375-3690
16		42375-3673	34		42375-3691
17		42375-3674	35		42375-3692
18		42375-3675	36		42375-3693
19		42375-3676			

ENG. NO: 42375-3694/3728					
HEADER NUMBER:			42312-0036		
PIN NUMBER:			42663-AXB208		
PIN LENGTH: L			.540 /13.72		
MATING LENGTH: M			.250 / 6.35		
GOLD POINT: G			.140 / 3.56		
PC TAIL LENGTH: P			.200 / 5.08		
TIN: T			.135 / 3.43		
CKTS:			2-36		
KINKS:			NO		
VOIDED CKTS:			5		
PACKAGING:			BULK PK-40873-0041		
CKTS	MATERIAL NUMBER	ENG NUMBER	CKTS	MATERIAL NUMBER	ENG NUMBER
2		42375-3694	20		42375-3712
3		42375-3695	21		42375-3713
4		42375-3696	22		42375-3714
5		42375-3697	23		42375-3715
6		42375-3698	24		42375-3716
7		42375-3699	25		42375-3717
8	68300-2002	42375-3700	26		42375-3718
9		42375-3701	27		42375-3719
10		42375-3702	28		42375-3720
11		42375-3703	29		42375-3721
12		42375-3704	30		42375-3722
13		42375-3705	31		42375-3723
14		42375-3706	32		42375-3724
15		42375-3707	33		42375-3725
16		42375-3708	34		42375-3726
17		42375-3709	35		42375-3727
18		42375-3710	36		42375-3728
19		42375-3711			

SYMBOLS

= 0

= 0

= 0

= 0

= 0

= 0

= 0

= 0

= 0

DIMENSION UNITS: MM/IN | SCALE: 1:1

GENERAL TOLERANCES (UNLESS SPECIFIED)

	MM	INCH
4 PLACES	±	±
3 PLACES	±	± 0.01
2 PLACES	± 0.25	±
1 PLACE	± 0.38	±
0 PLACES	±	±
ANGULAR TOL	± 0.5 °	

DRAFT WHERE APPLICABLE MUST REMAIN WITHIN DIMENSIONS

THIS DRAWING CONTAINS INFORMATION THAT IS PROPRIETARY TO MOLEX ELECTRONIC TECHNOLOGIES, LLC AND SHOULD NOT BE USED WITHOUT WRITTEN PERMISSION

CURRENT REV DESC: GOLD LENGTH SPEC CHANGED AS MIN 2.54- MAX 5.54 FOR A-42375-0037/0071

EC NO: 689596

DRWN: SHRUTJ 2021/09/14

CHK'D: SHRUTJ 2021/12/20

APPR: ISHWARG 2021/12/20

INITIAL REVISION:

DRWN: SCHAFER 2003/02/11

APPR: MARGULIS 2004/02/27

THIRD ANGLE PROJECTION | DRAWING: B-SIZE | SERIES: 42375

molex

KK 100 HEADER ASSY
FLAT VERTICAL BREAKAWAY

PRODUCT CUSTOMER DRAWING

DOCUMENT NUMBER	DOC TYPE	DOC PART	REVISION
SD-42375-001	PSD	001	V

MATERIAL NUMBER	CUSTOMER	SHEET NUMBER
SEE CHART	GENERAL MARKET	27 OF 35

DOCUMENT STATUS	P1	RELEASE DATE	2021/12/20 12:18:33

FORMAT: Eng-lega-master-tb-prod-B
REVISION: D
DATE: 2018/01/18

ENG. NO: 42375-3659/3693					
HEADER NUMBER:		42312-0036			
PIN NUMBER:		42663-AXB208			
PIN LENGTH: L		.540 /13.72			
MATING LENGTH: M		.250 / 6.35			
GOLD POINT: G		.140 / 3.56			
PC TAIL LENGTH: P		.200 / 5.08			
TIN: T		.135 / 3.43			
CKTS:		2-36			
KINKS:		NO			
VOIDED CKTS:		5			
PACKAGING:		BULK PK-40873-0041			
CKTS	MATERIAL NUMBER	ENG NUMBER	CKTS	MATERIAL NUMBER	ENG NUMBER
2		42375-3729	20		42375-3747
3		42375-3730	21		42375-3748
4		42375-3731	22		42375-3749
5		42375-3732	23		42375-3750
6		42375-3733	24		42375-3751
7		42375-3734	25		42375-3752
8	68300-2007	42375-3735	26		42375-3753
9		42375-3736	27		42375-3754
10		42375-3737	28		42375-3755
11		42375-3738	29		42375-3756
12		42375-3739	30		42375-3757
13		42375-3740	31		42375-3758
14		42375-3741	32		42375-3759
15		42375-3742	33		42375-3760
16		42375-3743	34		42375-3761
17		42375-3744	35		42375-3762
18		42375-3745	36		42375-3763
19		42375-3746			

ENG. NO: 42375-3764/3798			
HEADER NUMBER:	42312-0036		
PIN NUMBER:	42663-ETA154		
PIN LENGTH: L	.540 /13.72		
MATING LENGTH: M	.250 / 6.35		
GOLD POINT: G	.140 / 3.56		
PC TAIL LENGTH: P	.200 / 5.08		
TIN: T	.135 / 3.43		
CKTS:	2-36		
KINKS:	NO		
VOIDED CKTS:	5		
PACKAGING:	BULK PK-40873-0041		
CKTS	ITEM NUMBER	CKTS	ITEM NUMBER
2		20	
3		21	
4		22	
5		23	
6		24	
7		25	
8	68300-2007	26	
9		27	
10		28	
11		29	
12		30	
13		31	
14		32	
15		33	
16		34	
17		35	
18		36	
19			

SYMBOLS
= 0
= 0
= 0
= 0
= 0
= 0
= 0
= 0
= 0

THIS DRAWING CONTAINS INFORMATION THAT IS PROPRIETARY TO MOLEX ELECTRONIC TECHNOLOGIES, LLC AND SHOULD NOT BE USED WITHOUT WRITTEN PERMISSION

DIMENSION UNITS: MM/IN
SCALE: 1:1

GENERAL TOLERANCES (UNLESS SPECIFIED)

	MM	INCH
4 PLACES	±	±
3 PLACES	±	± 0.01
2 PLACES	± 0.25	±
1 PLACE	± 0.38	±
0 PLACES	±	±
ANGULAR TOL	± 0.5 °	

DRAFT WHERE APPLICABLE MUST REMAIN WITHIN DIMENSIONS

CURRENT REV DESC: GOLD LENGTH SPEC CHANGED AS MIN 2.54- MAX 5.54 FOR A-42375-0037/0071

EC NO: 689596
DRWN: SHRUTJ 2021/09/14
CHK'D: SHRUTJ 2021/12/20
APPR: ISHWARG 2021/12/20

INITIAL REVISION:
DRWN: SCHAFER 2003/02/11
APPR: MARGULIS 2004/02/27

THIRD ANGLE PROJECTION

DRAWING: B-SIZE
SERIES: 42375

molex

KK 100 HEADER ASSY
FLAT VERTICAL BREAKAWAY

PRODUCT CUSTOMER DRAWING

DOCUMENT NUMBER	DOC TYPE	DOC PART	REVISION
SD-42375-001	PSD	001	V

MATERIAL NUMBER	CUSTOMER	SHEET NUMBER
SEE CHART	GENERAL MARKET	28 OF 35

DOCUMENT STATUS	P1	RELEASE DATE	2021/12/20 12:18:33

FORMAT: Eng-lega-master-tb-prod-B
REVISION: D
DATE: 2018/01/18

ENG. NO: 42375-3799/3832			
HEADER NUMBER:	42312-0036		
PIN NUMBER:	42663-ABA154		
PIN LENGTH: L	.455 / 11.56		
MATING LENGTH: M	.240 / 6.09		
GOLD POINT: G	N/A		
PC TAIL LENGTH: P	.125 / 3.18		
TIN: T	OVERALL		
CKTS:	3-36		
KINKS:	NO		
VOIDED CKTS:	3		
PACKAGING:	BULK PK-40873-0041		
CKTS	MATERIAL NUMBER	CKTS	MATERIAL NUMBER
2		20	
3		21	
4		22	
5	42375-3801	23	
6		24	
7		25	
8		26	
9		27	
10		28	
11		29	
12		30	
13		31	
14		32	
15		33	
16		34	
17		35	
18		36	
19			

ENG. NO: 42375-3733/3867			
HEADER NUMBER:	42312-0036		
PIN NUMBER:	42663-ABB208		
PIN LENGTH: L	.455 / 11.56		
MATING LENGTH: M	.250 / 6.35		
GOLD POINT: G	.100 / 2.54		
PC TAIL LENGTH: P	.115 / 2.92		
TIN: T	.100 / 2.54		
CKTS:	2-36		
KINKS:	NO		
VOIDED CKTS:	NONE		
PACKAGING:	BULK PK-40873-0041		
CKTS	MATERIAL NUMBER	CKTS	MATERIAL NUMBER
2		20	
3		21	
4		22	
5	42375-3836	23	
6		24	
7		25	
8		26	
9		27	
10		28	
11		29	
12		30	
13		31	
14		32	
15		33	
16		34	
17		35	
18		36	
19			

ENG. NO: 42375-3868 / 3902			
HEADER NUMBER:	42312-0036		
PIN NUMBER:	42663-DWA154		
PIN LENGTH: L	.850 / 21.59		
MATING LENGTH: M	.640 / 16.26		
GOLD POINT: G	N/A		
PC TAIL LENGTH: P	.120 / 3.05		
TIN: T	OVERALL		
CKTS:	2-36		
KINKS:	NO		
VOIDED CKTS:	NONE		
PACKAGING:	BULK PK-40873-0041		
CKTS	ITEM NUMBER	CKTS	ITEM NUMBER
2		20	
3		21	
4	42375-3870	22	
5		23	
6	42375-3872	24	
7		25	
8		26	
9		27	
10		28	
11		29	
12		30	
13		31	
14		32	
15		33	
16		34	
17		35	
18		36	
19			

DOCUMENT STATUS	P1	RELEASE DATE	2021/12/20 12:18:33

FORMAT: Eng-lega-master-tb-prod-B
REVISION: D
DATE: 2018/01/18

SYMBOLS
= 0
= 0
= 0
= 0
= 0
= 0
= 0
= 0
= 0

THIS DRAWING CONTAINS INFORMATION THAT IS PROPRIETARY TO MOLEX ELECTRONIC TECHNOLOGIES, LLC AND SHOULD NOT BE USED WITHOUT WRITTEN PERMISSION

DIMENSION UNITS: MM/IN
SCALE: 1:1

GENERAL TOLERANCES (UNLESS SPECIFIED)

	MM	INCH
4 PLACES	±	±
3 PLACES	±	± 0.01
2 PLACES	± 0.25	±
1 PLACE	± 0.38	±
0 PLACES	±	±
ANGULAR TOL	± 0.5 °	

DRAFT WHERE APPLICABLE MUST REMAIN WITHIN DIMENSIONS

CURRENT REV DESC: GOLD LENGTH SPEC CHANGED AS MIN 2.54- MAX 5.54 FOR A-42375-0037/0071

EC NO: 689596
DRWN: SHRUTJ 2021/09/14
CHK'D: SHRUTJ 2021/12/20
APPR: ISHWARG 2021/12/20

INITIAL REVISION:
DRWN: SCHAFER 2003/02/11
APPR: MARGULIS 2004/02/27

THIRD ANGLE PROJECTION

DRAWING: B-SIZE
SERIES: 42375

molex

KK 100 HEADER ASSY
FLAT VERTICAL BREAKAWAY

PRODUCT CUSTOMER DRAWING

DOCUMENT NUMBER	DOC TYPE	DOC PART	REVISION
SD-42375-001	PSD	001	V

MATERIAL NUMBER	CUSTOMER	SHEET NUMBER
SEE CHART	GENERAL MARKET	29 OF 35

ENG. NO: 42375-3903/3932			
HEADER NUMBER:	42312-0036		
PIN NUMBER:	42663-BSA154		
PIN LENGTH: L	.630 / 16.00		
MATING LENGTH: M	.421 / 10.69		
GOLD POINT: G	N/A		
PC TAIL LENGTH: P	.119 / 3.02		
TIN: T	OVERALL		
CKTS:	7-36		
KINKS:	NO		
VOIDED CKTS:	7		
PACKAGING:	BULK PK-40873-0041		
CKTS	MATERIAL NUMBER	CKTS	MATERIAL NUMBER
2		20	
3		21	
4		22	
5		23	
6		24	
7		25	
8	42375-3904	26	
9		27	
10		28	
11		29	
12		30	
13		31	
14		32	
15		33	
16		34	
17		35	
18		36	
19			

ENG. NO: 42375-3933/3964			
HEADER NUMBER:	42312-0036		
PIN NUMBER:	42663-BSA154		
PIN LENGTH: L	.630 / 16.00		
MATING LENGTH: M	.405/10.29		
GOLD POINT: G	N/A		
PC TAIL LENGTH: P	.135/3.43		
TIN: T	OVERALL		
CKTS:	5-36		
KINKS:	SMES-42003		
VOIDED CKTS:	5		
PACKAGING:	BULK PK-40873-0041		
CKTS	MATERIAL NUMBER	CKTS	MATERIAL NUMBER
2		20	
3		21	
4		22	
5		23	
6		24	
7		25	
8		26	
9	42375-3937	27	
10		28	
11		29	
12		30	
13		31	
14		32	
15		33	
16		34	
17		35	
18		36	
19			

ENG. NO: 42375-3965/3995			
HEADER NUMBER:	42312-0036		
PIN NUMBER:	42663-BSA154		
PIN LENGTH: L	.630 / 16.00		
MATING LENGTH: M	.405/10.29		
GOLD POINT: G	N/A		
PC TAIL LENGTH: P	.135/3.43		
TIN: T	OVERALL		
CKTS:	6-36		
KINKS:	SMES-42003		
VOIDED CKTS:	4, 5, 6		
PACKAGING:	BULK PK-40873-0041		
CKTS	MATERIAL NUMBER	CKTS	MATERIAL NUMBER
2		20	
3		21	
4		22	
5		23	
6		24	
7		25	
8		26	
9	42375-3968	27	
10		28	
11		29	
12		30	
13		31	
14		32	
15		33	
16		34	
17		35	
18		36	
19			

SYMBOLS

= 0

= 0

= 0

= 0

= 0

= 0

= 0

= 0

= 0

THIS DRAWING CONTAINS INFORMATION THAT IS PROPRIETARY TO MOLEX ELECTRONIC TECHNOLOGIES, LLC AND SHOULD NOT BE USED WITHOUT WRITTEN PERMISSION

DIMENSION UNITS: MM/IN | SCALE: 1:1

GENERAL TOLERANCES (UNLESS SPECIFIED)

	MM	INCH
4 PLACES	±	±
3 PLACES	±	± 0.01
2 PLACES	± 0.25	±
1 PLACE	± 0.38	±
0 PLACES	±	±
ANGULAR TOL	± 0.5 °	

DRAFT WHERE APPLICABLE MUST REMAIN WITHIN DIMENSIONS

CURRENT REV DESC: GOLD LENGTH SPEC CHANGED AS MIN 2.54- MAX 5.54 FOR A-42375-0037/0071

EC NO: 689596

DRWN: SHRUTJ 2021/09/14

CHK'D: SHRUTJ 2021/12/20

APPR: ISHWARG 2021/12/20

INITIAL REVISION:

DRWN: SCHAFER 2003/02/11

APPR: MARGULIS 2004/02/27

THIRD ANGLE PROJECTION | DRAWING: B-SIZE | SERIES: 42375

molex

KK 100 HEADER ASSY
FLAT VERTICAL BREAKAWAY

PRODUCT CUSTOMER DRAWING

DOCUMENT NUMBER	DOC TYPE	DOC PART	REVISION
SD-42375-001	PSD	001	V

MATERIAL NUMBER	CUSTOMER	SHEET NUMBER
SEE CHART	GENERAL MARKET	30 OF 35

DOCUMENT STATUS	P1	RELEASE DATE	2021/12/20 12:18:33

FORMAT: Eng-lega-master-tb-prod-B
REVISION: D
DATE: 2018/01/18

ENG. NO: A-42375-3996/4030			
HEADER NUMBER:		42312-0036	
PIN NUMBER:		42663-AXA154	
PIN LENGTH: L		.540 / 13.72	
MATING LENGTH: M		.390 / 9.91	
GOLD POINT: G		N/A	
PC TAIL LENGTH: P		.060 / 1.52	
TIN: T		OVERALL	
CKTS:		2-36	
KINKS:		NO	
VOIDED CKTS:		NONE	
PACKAGING:		BULK PK-40873-0041	
CKTS	ITEM NUMBER	CKTS	ITEM NUMBER
2		20	
3		21	
4		22	
5		23	
6	42375-4000	24	
7	42375-4001	25	
8		26	
9		27	
10		28	
11		29	
12		30	
13		31	
14		32	
15		33	
16		34	
17		35	
18		36	
19			

ENG. NO: 42375-4031/4059			
HEADER NUMBER:		42312-0036	
PIN NUMBER:		42663-ABA154	
PIN LENGTH: L		.455 / 11.56	
MATING LENGTH: M		.240 / 6.09	
GOLD POINT: G		N/A	
PC TAIL LENGTH: P		.125 / 3.18	
TIN: T		OVERALL	
CKTS:		8-36	
KINKS:		NO	
VOIDED CKTS:		2, 4, 6, 8	
PACKAGING:		BULK PK-40873-0041	
CKTS	MATERIAL NUMBER	CKTS	MATERIAL NUMBER
2		20	
3		21	
4		22	
5		23	
6		24	
7		25	
8		26	
9	42375-4032	27	
10		28	
11		29	
12		30	
13		31	
14		32	
15		33	
16		34	
17		35	
18		36	
19			

ENG. NO: 42375-4060 / 4094			
HEADER NUMBER:		42312-0036	
PIN NUMBER:		42663-CGA154	
PIN LENGTH: L		.690 / 17.53	
MATING LENGTH: M		.521 / 13.23	
GOLD POINT: G		N/A	
PC TAIL LENGTH: P		.079 / 2.01	
TIN: T		OVERALL	
CKTS:		2-36	
KINKS:		NO	
VOIDED CKTS:		NONE	
PACKAGING:		BULK PK-40873-0041	
CKTS	MATERIAL NUMBER	CKTS	MATERIAL NUMBER
2		20	
3		21	
4		22	
5		23	
6	42375-4064	24	
7		25	
8		26	
9		27	
10		28	
11		29	
12		30	
13		31	
14		32	
15		33	
16		34	
17		35	
18		36	
19			

SYMBOLS
= 0
= 0
= 0
= 0
= 0
= 0
= 0
= 0
= 0

THIS DRAWING CONTAINS INFORMATION THAT IS PROPRIETARY TO MOLEX ELECTRONIC TECHNOLOGIES, LLC AND SHOULD NOT BE USED WITHOUT WRITTEN PERMISSION

DIMENSION UNITS	SCALE
MM/IN	1:1

GENERAL TOLERANCES (UNLESS SPECIFIED)

	MM	INCH
4 PLACES	±	±
3 PLACES	±	± 0.01
2 PLACES	± 0.25	±
1 PLACE	± 0.38	±
0 PLACES	±	±
ANGULAR TOL	± 0.5 °	

DRAFT WHERE APPLICABLE MUST REMAIN WITHIN DIMENSIONS

CURRENT REV DESC: GOLD LENGTH SPEC CHANGED AS MIN 2.54- MAX 5.54 FOR A-42375-0037/0071

EC NO: 689596

DRWN:	SHRUTJ	2021/09/14
CHK'D:	SHRUTJ	2021/12/20
APPR:	ISHWARG	2021/12/20

INITIAL REVISION:

DRWN:	SCHAFER	2003/02/11
APPR:	MARGULIS	2004/02/27

THIRD ANGLE PROJECTION

DRAWING	SERIES
B-SIZE	42375

molex

KK 100 HEADER ASSY
FLAT VERTICAL BREAKAWAY

PRODUCT CUSTOMER DRAWING

DOCUMENT NUMBER	DOC TYPE	DOC PART	REVISION
SD-42375-001	PSD	001	V

MATERIAL NUMBER	CUSTOMER	SHEET NUMBER
SEE CHART	GENERAL MARKET	31 OF 35

DOCUMENT STATUS	P1	RELEASE DATE	2021/12/20 12:18:33

FORMAT: Eng-lega-master-tb-prod-B
REVISION: D
DATE: 2018/01/18

ENG. NO: A-42375-4095/4129			
HEADER NUMBER:		42312-0036	
PIN NUMBER:		42663-DEB228	
PIN LENGTH: L		.785 / 19.94	
MATING LENGTH: M		.470 / 11.94	
GOLD POINT: G		.250 / 6.35	
PC TAIL LENGTH: P		.225 / 5.72	
TIN: T		.200 / 5.08	
CKTS:		2-36	
KINKS:		NO	
VOIDED CKTS:		NONE	
PACKAGING:		BULK	PK-40873-0041
CKTS	ITEM NUMBER	CKTS	ITEM NUMBER
2		20	
3		21	
4		22	
5		23	
6		24	
7		25	
8		26	
9		27	
10	42375-4103	28	
11		29	
12		30	
13		31	
14		32	
15		33	
16		34	
17		35	
18	42375-4111	36	
19			

ENG. NO: A-42375-4130/4161			
HEADER NUMBER:		42312-0036	
PIN NUMBER:		42663-ATA154	
PIN LENGTH: L		530/13.46	
MATING LENGTH: M		.320/8.13	
GOLD POINT: G		N/A	
PC TAIL LENGTH: P		.120/3.05	
TIN: T		OVERALL	
CKTS:		5-36	
KINKS:		SMES-42003	
VOIDED CKTS:		2, 3, 4	
PACKAGING:		BULK	PK-40873-0041
CKTS	ITEM NUMBER	CKTS	ITEM NUMBER
		20	
		21	
		22	
5	42375-4130	23	
6		24	
7		25	
8		26	
9		27	
10		28	
11		29	
12		30	
13		31	
14		32	
15		33	
16		34	
17		35	
18		36	
19			

ENG. NO: 42375-4162/4196			
HEADER NUMBER:		42312-0036	
PIN NUMBER:		42663-BSC228	
PIN LENGTH: L		.630/16.00	
MATING LENGTH: M		.400/10.16	
GOLD POINT: G		.345/8.76	
PC TAIL LENGTH: P		140/3.56	
TIN: T		.100/2.54	
CKTS:		2-36	
KINKS:		NO	
VOIDED CKTS:		NONE	
PACKAGING:		BULK	PK-40873-0041
CKTS	MATERIAL NUMBER	CKTS	MATERIAL NUMBER
2		20	
3		21	
4	42375-4164	22	
5	42375-4165	23	
6		24	
7		25	
8		26	
9		27	
10	42375-4170	28	
11		29	
12		30	
13		31	
14		32	
15		33	
16		34	
17		35	
18		36	
19			

SYMBOLS

= 0

= 0

= 0

= 0

= 0

= 0

= 0

= 0

= 0

THIS DRAWING CONTAINS INFORMATION THAT IS PROPRIETARY TO MOLEX ELECTRONIC TECHNOLOGIES, LLC AND SHOULD NOT BE USED WITHOUT WRITTEN PERMISSION

DIMENSION UNITS: MM/IN | SCALE: 1:1

GENERAL TOLERANCES (UNLESS SPECIFIED)

	MM	INCH
4 PLACES	±	±
3 PLACES	±	± 0.01
2 PLACES	± 0.25	±
1 PLACE	± 0.38	±
0 PLACES	±	±
ANGULAR TOL	± 0.5 °	

DRAFT WHERE APPLICABLE MUST REMAIN WITHIN DIMENSIONS

CURRENT REV DESC: GOLD LENGTH SPEC CHANGED AS MIN 2.54- MAX 5.54 FOR A-42375-0037/0071

EC NO: 689596

DRWN: SHRUTJ 2021/09/14

CHK'D: SHRUTJ 2021/12/20

APPR: ISHWARG 2021/12/20

INITIAL REVISION:

DRWN: SCHAFER 2003/02/11

APPR: MARGULIS 2004/02/27

THIRD ANGLE PROJECTION | DRAWING: B-SIZE | SERIES: 42375

molex

KK 100 HEADER ASSY
FLAT VERTICAL BREAKAWAY

PRODUCT CUSTOMER DRAWING

DOCUMENT NUMBER	DOC TYPE	DOC PART	REVISION
SD-42375-001	PSD	001	V

MATERIAL NUMBER	CUSTOMER	SHEET NUMBER
SEE CHART	GENERAL MARKET	32 OF 35

DOCUMENT STATUS	P1	RELEASE DATE	2021/12/20 12:18:33

FORMAT: Eng-lega-master-tb-prod-B
REVISION: D
DATE: 2018/01/18

ENG. NO: A-42375-1622			
HEADER NUMBER:	42312-0036		
PIN NUMBER:	42663-AYB208		
PIN LENGTH: L	.545 / 13.84		
MATING LENGTH: M	.320 / 8.13		
GOLD POINT: G	.140 / 3.56		
PC TAIL LENGTH: P	.135 / 3.43		
TIN: T	.135 / 3.43		
CKTS:	2-36		
KINKS:	SMES-42003		
VOIDED CKTS:	3		
PACKAGING:	BULK PK-40873-0041		
CKTS	MATERIAL NUMBER	CKTS	MATERIAL NUMBER
2		20	
3		21	
4		22	
5		23	
6		24	
7		25	
8		26	
9	42375-1622	27	
10		28	
11		29	
12		30	
13		31	
14		32	
15		33	
16		34	
17		35	
18		36	
19			

ENG. NO: A-42375-4199			
HEADER NUMBER:	42312-0036		
PIN NUMBER:	42663-ARB228		
PIN LENGTH: L	.520 / 13.21		
MATING LENGTH: M	.230 / 5.84		
GOLD POINT: G	.140 / 3.56		
PC TAIL LENGTH: P	.200 / 5.08		
TIN: T	.135 / 3.43		
CKTS:	2-36		
KINKS:	NO		
VOIDED CKTS:	NONE		
PACKAGING:	BULK PK-40873-0041		
CKTS	MATERIAL NUMBER	CKTS	MATERIAL NUMBER
2	42375-4199	20	
3		21	
4		22	
5		23	
6		24	
7		25	
8		26	
9		27	
10		28	
11		29	
12		30	
13		31	
14		32	
15		33	
16		34	
17		35	
18		36	
19			

ENG. NO: A-42375-4200			
HEADER NUMBER:	42312-0036		
PIN NUMBER:	42663-ADB208		
PIN LENGTH: L	.465 / 11.81		
MATING LENGTH: M	.240 / 6.09		
GOLD POINT: G	.100 / 2.54		
PC TAIL LENGTH: P	.135 / 3.43		
TIN: T	.100 / 2.54		
CKTS:	2-36		
KINKS:	SMES-42003		
VOIDED CKTS:	3, 4		
PACKAGING:	BULK PK-40873-0041		
CKTS	MATERIAL NUMBER	CKTS	MATERIAL NUMBER
2		20	
3		21	
4		22	
5	42375-4200	23	
6		24	
7		25	
8		26	
9		27	
10		28	
11		29	
12		30	
13		31	
14		32	
15		33	
16		34	
17		35	
18		36	
19			

SYMBOLS

= 0
= 0
= 0
= 0
= 0
= 0
= 0
= 0
= 0

THIS DRAWING CONTAINS INFORMATION THAT IS PROPRIETARY TO MOLEX ELECTRONIC TECHNOLOGIES, LLC AND SHOULD NOT BE USED WITHOUT WRITTEN PERMISSION

DIMENSION UNITS: MM/IN
SCALE: 1:1

GENERAL TOLERANCES (UNLESS SPECIFIED)

	MM	INCH
4 PLACES	±	±
3 PLACES	±	± 0.01
2 PLACES	± 0.25	±
1 PLACE	± 0.38	±
0 PLACES	±	±
ANGULAR TOL	± 0.5 °	

DRAFT WHERE APPLICABLE MUST REMAIN WITHIN DIMENSIONS

CURRENT REV DESC: GOLD LENGTH SPEC CHANGED AS MIN 2.54- MAX 5.54 FOR A-42375-0037/0071

EC NO: 689596
DRWN: SHRUTJ 2021/09/14
CHK'D: SHRUTJ 2021/12/20
APPR: ISHWARG 2021/12/20

INITIAL REVISION:
DRWN: SCHAFER 2003/02/11
APPR: MARGULIS 2004/02/27

THIRD ANGLE PROJECTION

DRAWING: B-SIZE
SERIES: 42375

molex

KK 100 HEADER ASSY
FLAT VERTICAL BREAKAWAY

PRODUCT CUSTOMER DRAWING

DOCUMENT NUMBER	DOC TYPE	DOC PART	REVISION
SD-42375-001	PSD	001	V

MATERIAL NUMBER	CUSTOMER	SHEET NUMBER
SEE CHART	GENERAL MARKET	33 OF 35

DOCUMENT STATUS	P1	RELEASE DATE	2021/12/20 12:18:33

FORMAT: Eng-lega-master-tb-prod-B
REVISION: D
DATE: 2018/01/18

ENG. NO: 42375-4236			
HEADER NUMBER:	42312-0036		
PIN NUMBER:	42663-CCA118		
PIN LENGTH: L	.670 / 17.02		
MATING LENGTH: M	.440 / 11.18		
GOLD POINT: G	NA		
PC TAIL LENGTH: P	.140 / 3.56		
TIN: T	OVERALL		
CKTS:	2-36		
KINKS:	SMES-42003		
VOIDED CKTS:	NONE		
PACKAGING:	BULK PK-40873-0041		
CKTS	MATERIAL NUMBER	CKTS	MATERIAL NUMBER
2		20	
3		21	
4		22	
5		23	
6	42375-4236	24	
7		25	
8		26	
9		27	
10		28	
11		29	
12		30	
13		31	
14		32	
15		33	
16		34	
17		35	
18		36	
19			

ENG. NO: 42375-4305			
HEADER NUMBER:	42312-0036		
PIN NUMBER:	42663-BDA154		
PIN LENGTH: L	.570 / 14.48		
MATING LENGTH: M	.339 / 8.61		
GOLD POINT: G	N/A		
PC TAIL LENGTH: P	.140 / 3.56		
TIN: T	OVERALL		
CKTS:	2-36		
KINKS:	NO		
VOIDED CKTS:	NONE		
PACKAGING:	BULK PK-40873-0041		
CKTS	MATERIAL NUMBER	CKTS	MATERIAL NUMBER
2		20	
3		21	
4		22	
5	42375-4305	23	
6		24	
7		25	
8		26	
9		27	
10		28	
11		29	
12		30	
13		31	
14		32	
15		33	
16		34	
17		35	
18		36	
19			

ENG. NO: 42375-4338/4341			
HEADER NUMBER:	42312-0036		
PIN NUMBER:	42663-BGA154		
PIN LENGTH: L	.585 / 14.86		
MATING LENGTH: M	.398 / 10.11		
GOLD POINT: G	N/A		
PC TAIL LENGTH: P	.097 / 2.46		
TIN: T	OVERALL		
CKTS:	2-36		
KINKS:	NO		
VOIDED CKTS:	NONE		
PACKAGING:	BULK PK-40873-0041		
CKTS	MATERIAL NUMBER	CKTS	MATERIAL NUMBER
2		20	
3	42375-4338	21	
4		22	
5		23	
6	42375-4341	24	
7		25	
8		26	
9		27	
10		28	
11		29	
12		30	
13		31	
14		32	
15		33	
16		34	
17		35	
18		36	
19			

SYMBOLS

= 0

= 0

= 0

= 0

= 0

= 0

= 0

= 0

= 0

THIS DRAWING CONTAINS INFORMATION THAT IS PROPRIETARY TO MOLEX ELECTRONIC TECHNOLOGIES, LLC AND SHOULD NOT BE USED WITHOUT WRITTEN PERMISSION

DIMENSION UNITS	SCALE
MM/IN	1:1

GENERAL TOLERANCES (UNLESS SPECIFIED)

	MM	INCH
4 PLACES	±	±
3 PLACES	±	± 0.01
2 PLACES	± 0.25	±
1 PLACE	± 0.38	±
0 PLACES	±	±
ANGULAR TOL	± 0.5 °	

DRAFT WHERE APPLICABLE MUST REMAIN WITHIN DIMENSIONS

CURRENT REV DESC: GOLD LENGTH SPEC CHANGED AS MIN 2.54- MAX 5.54 FOR A-42375-0037/0071

EC NO: 689596

DRWN: SHRUTJ 2021/09/14

CHK'D: SHRUTJ 2021/12/20

APPR: ISHWARG 2021/12/20

INITIAL REVISION:

DRWN: SCHAFER 2003/02/11

APPR: MARGULIS 2004/02/27

THIRD ANGLE PROJECTION

DRAWING: B-SIZE

SERIES: 42375

molex

KK 100 HEADER ASSY
FLAT VERTICAL BREAKAWAY

PRODUCT CUSTOMER DRAWING

DOCUMENT NUMBER	DOC TYPE	DOC PART	REVISION
SD-42375-001	PSD	001	V

MATERIAL NUMBER	CUSTOMER	SHEET NUMBER
SEE CHART	GENERAL MARKET	34 OF 35

DOCUMENT STATUS	P1	RELEASE DATE	2021/12/20 12:18:33

FORMAT: Eng-lega-master-tb-prod-B
REVISION: D
DATE: 2018/01/18

ENG. NO: 42375-4413			
HEADER NUMBER:	42312-0036		
PIN NUMBER:	42663-ABB208		
PIN LENGTH: L	.455 / 11.56		
MATING LENGTH: M	.240 / 6.09		
GOLD POINT: G	.100 / 2.54		
PC TAIL LENGTH: P	.125 / 3.18		
TIN: T	.100 / 2.54		
CKTS:	6-36		
KINKS:	NO		
VOIDED CKTS:	2, 4, 6		
PACKAGING:	BULK PK-40873-0041		
CKTS	MATERIAL NUMBER	CKTS	MATERIAL NUMBER
2		20	
3		21	
4		22	
5		23	
6		24	
7	42375-4413	25	
8		26	
9		27	
10		28	
11		29	
12		30	
13		31	
14		32	
15		33	
16		34	
17		35	
18		36	
19			

ENG. NO: 42375-4445			
HEADER NUMBER:	42312-0036		
PIN NUMBER:	42663-0364		
PLATING:	228		
PIN LENGTH: L	.590 / 14.99		
MATING LENGTH: M	.380 / 9.65		
GOLD POINT: G	.200 / 5.08		
PC TAIL LENGTH: P	.120 / 3.05		
TIN: T	.135 / 3.43		
CKTS:	2-36		
KINKS:	NO		
VOIDED CKTS:	NONE		
PACKAGING:	BULK PK-40873-0041		
CKTS	MATERIAL NUMBER	CKTS	MATERIAL NUMBER
2		20	
3		21	
4	42375-4445	22	
5		23	
6		24	
7		25	
8		26	
9		27	
10		28	
11		29	
12		30	
13		31	
14		32	
15		33	
16		34	
17		35	
18		36	
19			

ENG. NO: 42375-4549			
HEADER NUMBER:	42312-0036		
PIN NUMBER:	42663-ABB208		
PLATING:	208		
PIN LENGTH: L	.455 / 11.56		
MATING LENGTH: M	.240 / 6.09		
GOLD POINT: G	.100 / 2.54		
PC TAIL LENGTH: P	.125 / 3.18		
TIN: T	.100 / 2.54		
CKTS:	2-36		
KINKS:	NO		
VOIDED CKTS:	NONE		
PACKAGING:	TAPE AND REEL W/O CAP 423751000-PK		
CKTS	MATERIAL NUMBER	CKTS	MATERIAL NUMBER
2	22-28-4029	20	
3		21	
4		22	
5		23	
6		24	
7		25	
8		26	
9		27	
10		28	
11		29	
12		30	
13		31	
14		32	
15		33	
16		34	
17		35	
18		36	
19			

SYMBOLS

▽ = 0
▽ = 0
▽ = 0
▽ = 0
▼ = 0
▽ = 0
☒ = 0
■ = 0
▽ = 0

THIS DRAWING CONTAINS INFORMATION THAT IS PROPRIETARY TO MOLEX ELECTRONIC TECHNOLOGIES, LLC AND SHOULD NOT BE USED WITHOUT WRITTEN PERMISSION

DIMENSION UNITS	SCALE
MM/IN	1:1

GENERAL TOLERANCES (UNLESS SPECIFIED)

	MM	INCH
4 PLACES	±	±
3 PLACES	±	± 0.01
2 PLACES	± 0.25	±
1 PLACE	± 0.38	±
0 PLACES	±	±
ANGULAR TOL	± 0.5 °	

DRAFT WHERE APPLICABLE MUST REMAIN WITHIN DIMENSIONS

CURRENT REV DESC: GOLD LENGTH SPEC CHANGED AS MIN 2.54- MAX 5.54 FOR A-42375-0037/0071

EC NO: 689596

DRWN:	SHRUTJ	2021/09/14
CHK'D:	SHRUTJ	2021/12/20
APPR:	ISHWARG	2021/12/20

INITIAL REVISION:

DRWN:	SCHAFER	2003/02/11
APPR:	MARGULIS	2004/02/27

THIRD ANGLE PROJECTION | DRAWING: B-SIZE | SERIES: 42375

molex

KK 100 HEADER ASSY
FLAT VERTICAL BREAKAWAY

PRODUCT CUSTOMER DRAWING

DOCUMENT NUMBER	DOC TYPE	DOC PART	REVISION
SD-42375-001	PSD	001	V

MATERIAL NUMBER	CUSTOMER	SHEET NUMBER
SEE CHART	GENERAL MARKET	35 OF 35

DOCUMENT STATUS	P1	RELEASE DATE	2021/12/20 12:18:33

FORMAT: Eng-lega-master-tb-prod-B
REVISION: D
DATE: 2018/01/18

ENG. NO: A-42375-0002/0036	
HEADER NUMBER:	42312-0036
PIN NUMBER:	42663-ABA154
PIN LENGTH: L	.455 / 11.56
MATING LENGTH: M	.240 / 6.09
GOLD POINT: G	N/A
PC TAIL LENGTH: P	.125 / 3.18
TIN: T	OVERALL
CKTS:	2-36
KINKS:	NO
VOIDED CKTS:	NONE
PACKAGING:	BULK PK-40873-0041

CKTS	MATERIAL NUMBER	ENG NUMBER	CKTS	MATERIAL NUMBER	ENG NUMBER
02	22-28-4020	A-42375-0002	20	22-28-4200	A-42375-0020
03	22-28-4030	A-42375-0003	21	22-28-4210	A-42375-0021
04	22-28-4040	A-42375-0004	22	22-28-4220	A-42375-0022
05	22-28-4050	A-42375-0005	23	22-28-4230	A-42375-0023
06	22-28-4060	A-42375-0006	24	22-28-4240	A-42375-0024
07	22-28-4070	A-42375-0007	25	22-28-4250	A-42375-0025
08	22-28-4080	A-42375-0008	26	22-28-4260	A-42375-0026
09	22-28-4090	A-42375-0009	27	22-28-4270	A-42375-0027
10	22-28-4100	A-42375-0010	28	22-28-4280	A-42375-0028
11	22-28-4110	A-42375-0011	29	22-28-4290	A-42375-0029
12	22-28-4120	A-42375-0012	30	22-28-4300	A-42375-0030
13	22-28-4130	A-42375-0013	31	22-28-4310	A-42375-0031
14	22-28-4140	A-42375-0014	32	22-28-4320	A-42375-0032
15	22-28-4150	A-42375-0015	33	22-28-4330	A-42375-0033
16	22-28-4160	A-42375-0016	34	22-28-4340	A-42375-0034
17	22-28-4170	A-42375-0017	35	22-28-4350	A-42375-0035
18	22-28-4180	A-42375-0018	36	22-28-4360	A-42375-0036
19	22-28-4190	A-42375-0019			

ENG. NO: A-42375-0037/0071	
HEADER NUMBER:	42312-0036
PIN NUMBER:	42663-ABB208
PIN LENGTH: L	.455 / 11.56
MATING LENGTH: M	.240 / 6.09
GOLD POINT: G	.100 / 2.54 Min-0.218/5.54 Max
PC TAIL LENGTH: P	.125 / 3.18
TIN: T	.100 / 2.54
CKTS:	2-36
KINKS:	NO
VOIDED CKTS:	NONE
PACKAGING:	BULK PK-40873-0041

CKTS	MATERIAL NUMBER	ENG NUMBER	CKTS	MATERIAL NUMBER	ENG NUMBER
02	22-28-4023	A-42375-0037	20	22-28-4203	A-42375-0055
03	22-28-4033	A-42375-0038	21	22-28-4213	A-42375-0056
04	22-28-4043	A-42375-0039	22	22-28-4223	A-42375-0057
05	22-28-4053	A-42375-0040	23	22-28-4233	A-42375-0058
06	22-28-4063	A-42375-0041	24	22-28-4243	A-42375-0059
07	22-28-4073	A-42375-0042	25	22-28-4253	A-42375-0060
08	22-28-4083	A-42375-0043	26	22-28-4263	A-42375-0061
09	22-28-4093	A-42375-0044	27	22-28-4273	A-42375-0062
10	22-28-4103	A-42375-0045	28	22-28-4283	A-42375-0063
11	22-28-4113	A-42375-0046	29	22-28-4293	A-42375-0064
12	22-28-4123	A-42375-0047	30	22-28-4303	A-42375-0065
13	22-28-4133	A-42375-0048	31	22-28-4313	A-42375-0066
14	22-28-4143	A-42375-0049	32	22-28-4323	A-42375-0067
15	22-28-4153	A-42375-0050	33	22-28-4333	A-42375-0068
16	22-28-4163	A-42375-0051	34	22-28-4343	A-42375-0069
17	22-28-4173	A-42375-0052	35	22-28-4353	A-42375-0070
18	22-28-4183	A-42375-0053	36	22-28-4363	A-42375-0071
19	22-28-4193	A-42375-0054			

REV:	ECR/ECN INFORMATION:	TITLE:	SHEET No.
U	EC No.: **UCP2017-2793** DATE: **12/20/2021**	**KK 100 HEADER ASSY FLAT VERTICAL BREAKAWAY**	**- 2 -**

DOCUMENT NUMBER:	CREATED / REVISED BY:	CHECKED BY:	APPROVED BY:
SD- 42375-001	**SS06**	**ISHWARG**	**ISHWARG**

ENG. NO: A-42375-0072/0106	
HEADER NUMBER:	42312-0036
PIN NUMBER:	42663-ABB228
PIN LENGTH: L	.455 / 11.56
MATING LENGTH: M	.240 / 6.09
GOLD POINT: G	.100 / 2.54
PC TAIL LENGTH: P	.125 / 3.18
TIN: T	.100 / 2.54
CKTS:	2-36
KINKS:	NO
VOIDED CKTS:	NONE
PACKAGING:	BULK PK-40873-0041

CKTS	MATERIAL NUMBER	ENG NUMBER	CKTS	MATERIAL NUMBER	ENG NUMBER
02	22-28-4026	A-42375-0072	20	22-28-4206	A-42375-0090
03	22-28-4036	A-42375-0073	21	22-28-4216	A-42375-0091
04	22-28-4046	A-42375-0074	22	22-28-4226	A-42375-0092
05	22-28-4056	A-42375-0075	23	22-28-4236	A-42375-0093
06	22-28-4066	A-42375-0076	24	22-28-4246	A-42375-0094
07	22-28-4076	A-42375-0077	25	22-28-4256	A-42375-0095
08	22-28-4086	A-42375-0078	26	22-28-4266	A-42375-0096
09	22-28-4096	A-42375-0079	27	22-28-4276	A-42375-0097
10	22-28-4106	A-42375-0080	28	22-28-4286	A-42375-0098
11	22-28-4116	A-42375-0081	29	22-28-4296	A-42375-0099
12	22-28-4126	A-42375-0082	30	22-28-4306	A-42375-0100
13	22-28-4136	A-42375-0083	31	22-28-4316	A-42375-0101
14	22-28-4146	A-42375-0084	32	22-28-4326	A-42375-0102
15	22-28-4156	A-42375-0085	33	22-28-4336	A-42375-0103
16	22-28-4166	A-42375-0086	34	22-28-4346	A-42375-0104
17	22-28-4176	A-42375-0087	35	22-28-4356	A-42375-0105
18	22-28-4186	A-42375-0088	36	22-28-4366	A-42375-0106
19	22-28-4196	A-42375-0089			

ENG. NO: A-42375-0107/0141	
HEADER NUMBER:	42312-0036
PIN NUMBER:	42663-ATA154
PIN LENGTH: L	.530 / 13.46
MATING LENGTH: M	.320 / 8.13
GOLD POINT: G	N/A
PC TAIL LENGTH: P	.120 / 3.05
TIN: T	OVERALL
CKTS:	2-36
KINKS:	NO
VOIDED CKTS:	NONE
PACKAGING:	BULK PK-40873-0041

CKTS	MATERIAL NUMBER	ENG NUMBER	CKTS	MATERIAL NUMBER	ENG NUMBER
02	22-28-4021	A-42375-0107	20	22-28-4201	A-42375-0125
03	22-28-4031	A-42375-0108	21	22-28-4211	A-42375-0126
04	22-28-4041	A-42375-0109	22	22-28-4221	A-42375-0127
05	22-28-4051	A-42375-0110	23	22-28-4231	A-42375-0128
06	22-28-4061	A-42375-0111	24	22-28-4241	A-42375-0129
07	22-28-4071	A-42375-0112	25	22-28-4251	A-42375-0130
08	22-28-4081	A-42375-0113	26	22-28-4261	A-42375-0131
09	22-28-4091	A-42375-0114	27	22-28-4271	A-42375-0132
10	22-28-4101	A-42375-0115	28	22-28-4281	A-42375-0133
11	22-28-4111	A-42375-0116	29	22-28-4291	A-42375-0134
12	22-28-4121	A-42375-0117	30	22-28-4301	A-42375-0135
13	22-28-4131	A-42375-0118	31	22-28-4311	A-42375-0136
14	22-28-4141	A-42375-0119	32	22-28-4321	A-42375-0137
15	22-28-4151	A-42375-0120	33	22-28-4331	A-42375-0138
16	22-28-4161	A-42375-0121	34	22-28-4341	A-42375-0139
17	22-28-4171	A-42375-0122	35	22-28-4351	A-42375-0140
18	22-28-4181	A-42375-0123	36	22-28-4361	A-42375-0141
19	22-28-4191	A-42375-0124			

REV:	ECR/ECN INFORMATION:	TITLE:	SHEET No.
U	EC No.: **UCP2017-2793** DATE: **12/20/2021**	**KK 100 HEADER ASSY FLAT VERTICAL BREAKAWAY**	**- 3 -**

DOCUMENT NUMBER:	CREATED / REVISED BY:	CHECKED BY:	APPROVED BY:
SD- 42375-001	**SS06**	**ISHWARG**	**ISHWARG**

ENG. NO: A-42375-0142/0176	
HEADER NUMBER:	42312-0036
PIN NUMBER:	42663-ATB208
PIN LENGTH: L	.530 / 13.46
MATING LENGTH: M	.320 / 8.13
GOLD POINT: G	.140 / 3.56
PC TAIL LENGTH: P	.120 / 3.05
TIN: T	.135 / 3.43
CKTS:	2-36
KINKS:	NO
VOIDED CKTS:	NONE
PACKAGING:	BULK PK-40873-0041

CKTS	MATERIAL NUMBER	ENG NUMBER	CKTS	MATERIAL NUMBER	ENG NUMBER
02	22-28-4024	A-42375-0142	20	22-28-4204	A-42375-0160
03	22-28-4034	A-42375-0143	21	22-28-4214	A-42375-0161
04	22-28-4044	A-42375-0144	22	22-28-4224	A-42375-0162
05	22-28-4054	A-42375-0145	23	22-28-4234	A-42375-0163
06	22-28-4064	A-42375-0146	24	22-28-4244	A-42375-0164
07	22-28-4074	A-42375-0147	25	22-28-4254	A-42375-0165
08	22-28-4084	A-42375-0148	26	22-28-4264	A-42375-0166
09	22-28-4094	A-42375-0149	27	22-28-4274	A-42375-0167
10	22-28-4104	A-42375-0150	28	22-28-4284	A-42375-0168
11	22-28-4114	A-42375-0151	29	22-28-4294	A-42375-0169
12	22-28-4124	A-42375-0152	30	22-28-4304	A-42375-0170
13	22-28-4134	A-42375-0153	31	22-28-4314	A-42375-0171
14	22-28-4144	A-42375-0154	32	22-28-4324	A-42375-0172
15	22-28-4154	A-42375-0155	33	22-28-4334	A-42375-0173
16	22-28-4164	A-42375-0156	34	22-28-4344	A-42375-0174
17	22-28-4174	A-42375-0157	35	22-28-4354	A-42375-0175
18	22-28-4184	A-42375-0158	36	22-28-4364	A-42375-0176
19	22-28-4194	A-42375-0159			

ENG. NO: A-42375-0177/0211	
HEADER NUMBER:	42312-0036
PIN NUMBER:	42663-ATB228
PIN LENGTH: L	.530 / 13.46
MATING LENGTH: M	.320 / 8.13
GOLD POINT: G	.140 / 3.56
PC TAIL LENGTH: P	.120 / 3.05
TIN: T	.135 / 3.43
CKTS:	2-36
KINKS:	NO
VOIDED CKTS:	NONE
PACKAGING:	BULK PK-40873-0041

CKTS	MATERIAL NUMBER	ENG NUMBER	CKTS	MATERIAL NUMBER	ENG NUMBER
02	22-28-4027	A-42375-0177	20	22-28-4207	A-42375-0195
03	22-28-4037	A-42375-0178	21	22-28-4217	A-42375-0196
04	22-28-4047	A-42375-0179	22	22-28-4227	A-42375-0197
05	22-28-4057	A-42375-0180	23	22-28-4237	A-42375-0198
06	22-28-4067	A-42375-0181	24	22-28-4247	A-42375-0199
07	22-28-4077	A-42375-0182	25	22-28-4257	A-42375-0200
08	22-28-4087	A-42375-0183	26	22-28-4267	A-42375-0201
09	22-28-4097	A-42375-0184	27	22-28-4277	A-42375-0202
10	22-28-4107	A-42375-0185	28	22-28-4287	A-42375-0203
11	22-28-4117	A-42375-0186	29	22-28-4297	A-42375-0204
12	22-28-4127	A-42375-0187	30	22-28-4307	A-42375-0205
13	22-28-4137	A-42375-0188	31	22-28-4317	A-42375-0206
14	22-28-4147	A-42375-0189	32	22-28-4327	A-42375-0207
15	22-28-4157	A-42375-0190	33	22-28-4337	A-42375-0208
16	22-28-4167	A-42375-0191	34	22-28-4347	A-42375-0209
17	22-28-4177	A-42375-0192	35	22-28-4357	A-42375-0210
18	22-28-4187	A-42375-0193	36	22-28-4367	A-42375-0211
19	22-28-4197	A-42375-0194			

REV:	ECR/ECN INFORMATION:	TITLE:	SHEET No.
U	EC No.: **UCP2017-2793** DATE: **12/20/2021**	**KK 100 HEADER ASSY FLAT VERTICAL BREAKAWAY**	**- 4 -**

DOCUMENT NUMBER:	CREATED / REVISED BY:	CHECKED BY:	APPROVED BY:
SD- 42375-001	**SS06**	**ISHWARG**	**ISHWARG**

ENG. NO: A-42375-0212/0246	
HEADER NUMBER:	42312-0036
PIN NUMBER:	42663-AMA154
PIN LENGTH: L	.505 / 12.83
MATING LENGTH: M	.295 / 7.49
GOLD POINT: G	N/A
PC TAIL LENGTH: P	.120 / 3.05
TIN: T	OVERALL
CKTS:	2-36
KINKS:	NO
VOIDED CKTS:	NONE
PACKAGING:	BULK PK-40873-0041

CKTS	MATERIAL NUMBER	ENG NUMBER	CKTS	MATERIAL NUMBER	ENG NUMBER
02	22-28-4022	A-42375-0212	20	22-28-4202	A-42375-0230
03	22-28-4032	A-42375-0213	21	22-28-4212	A-42375-0231
04	22-28-4042	A-42375-0214	22	22-28-4222	A-42375-0232
05	22-28-4052	A-42375-0215	23	22-28-4232	A-42375-0233
06	22-28-4062	A-42375-0216	24	22-28-4242	A-42375-0234
07	22-28-4072	A-42375-0217	25	22-28-4252	A-42375-0235
08	22-28-4082	A-42375-0218	26	22-28-4262	A-42375-0236
09	22-28-4092	A-42375-0219	27	22-28-4272	A-42375-0237
10	22-28-4102	A-42375-0220	28	22-28-4282	A-42375-0238
11	22-28-4112	A-42375-0221	29	22-28-4292	A-42375-0239
12	22-28-4122	A-42375-0222	30	22-28-4302	A-42375-0240
13	22-28-4132	A-42375-0223	31	22-28-4312	A-42375-0241
14	22-28-4142	A-42375-0224	32	22-28-4322	A-42375-0242
15	22-28-4152	A-42375-0225	33	22-28-4332	A-42375-0243
16	22-28-4162	A-42375-0226	34	22-28-4342	A-42375-0244
17	22-28-4172	A-42375-0227	35	22-28-4352	A-42375-0245
18	22-28-4182	A-42375-0228	36	22-28-4362	A-42375-0246
19	22-28-4192	A-42375-0229			

ENG. NO: A-42375-0247/0281	
HEADER NUMBER:	42312-0036
PIN NUMBER:	42663-AMB208
PIN LENGTH: L	.505 / 12.83
MATING LENGTH: M	.295 / 7.49
GOLD POINT: G	.140 / 3.56
PC TAIL LENGTH: P	.120 / 3.05
TIN: T	.135 / 3.43
CKTS:	2-36
KINKS:	NO
VOIDED CKTS:	NONE
PACKAGING:	BULK PK-40873-0041

CKTS	MATERIAL NUMBER	ENG NUMBER	CKTS	MATERIAL NUMBER	ENG NUMBER
02	22-28-4025	A-42375-0247	20	22-28-4205	A-42375-0265
03	22-28-4035	A-42375-0248	21	22-28-4215	A-42375-0266
04	22-28-4045	A-42375-0249	22	22-28-4225	A-42375-0267
05	22-28-4055	A-42375-0250	23	22-28-4235	A-42375-0268
06	22-28-4065	A-42375-0251	24	22-28-4245	A-42375-0269
07	22-28-4075	A-42375-0252	25	22-28-4255	A-42375-0270
08	22-28-4085	A-42375-0253	26	22-28-4265	A-42375-0271
09	22-28-4095	A-42375-0254	27	22-28-4275	A-42375-0272
10	22-28-4105	A-42375-0255	28	22-28-4285	A-42375-0273
11	22-28-4115	A-42375-0256	29	22-28-4295	A-42375-0274
12	22-28-4125	A-42375-0257	30	22-28-4305	A-42375-0275
13	22-28-4135	A-42375-0258	31	22-28-4315	A-42375-0276
14	22-28-4145	A-42375-0259	32	22-28-4325	A-42375-0277
15	22-28-4155	A-42375-0260	33	22-28-4335	A-42375-0278
16	22-28-4165	A-42375-0261	34	22-28-4345	A-42375-0279
17	22-28-4175	A-42375-0262	35	22-28-4355	A-42375-0280
18	22-28-4185	A-42375-0263	36	22-28-4365	A-42375-0281
19	22-28-4195	A-42375-0264			

REV:	ECR/ECN INFORMATION:	TITLE:	SHEET No.
U	EC No.: **UCP2017-2793** DATE: **12/20/2021**	**KK 100 HEADER ASSY FLAT VERTICAL BREAKAWAY**	**- 5 -**

DOCUMENT NUMBER:	CREATED / REVISED BY:	CHECKED BY:	APPROVED BY:
SD- 42375-001	**SS06**	**ISHWARG**	**ISHWARG**

ENG. NO: A-42375-0282/0316	
HEADER NUMBER:	42312-0036
PIN NUMBER:	42663-AMB228
PIN LENGTH: L	.505 / 12.83
MATING LENGTH: M	.295 / 7.49
GOLD POINT: G	.140 / 3.56
PC TAIL LENGTH: P	.120 / 3.05
TIN: T	.135 / 3.43
CKTS:	2-36
KINKS:	NO
VOIDED CKTS:	NONE
PACKAGING:	BULK PK-40873-0041

CKTS	MATERIAL NUMBER	ENG NUMBER	CKTS	MATERIAL NUMBER	ENG NUMBER
02	22-28-4028	A-42375-0282	20	22-28-4208	A-42375-0300
03	22-28-4038	A-42375-0283	21	22-28-4218	A-42375-0301
04	22-28-4048	A-42375-0284	22	22-28-4228	A-42375-0302
05	22-28-4058	A-42375-0285	23	22-28-4238	A-42375-0303
06	22-28-4068	A-42375-0286	24	22-28-4248	A-42375-0304
07	22-28-4078	A-42375-0287	25	22-28-4258	A-42375-0305
08	22-28-4088	A-42375-0288	26	22-28-4268	A-42375-0306
09	22-28-4098	A-42375-0289	27	22-28-4278	A-42375-0307
10	22-28-4108	A-42375-0290	28	22-28-4288	A-42375-0308
11	22-28-4118	A-42375-0291	29	22-28-4298	A-42375-0309
12	22-28-4128	A-42375-0192	30	22-28-4308	A-42375-0310
13	22-28-4138	A-42375-0293	31	22-28-4318	A-42375-0311
14	22-28-4148	A-42375-0294	32	22-28-4328	A-42375-0312
15	22-28-4158	A-42375-0295	33	22-28-4338	A-42375-0313
16	22-28-4168	A-42375-0296	34	22-28-4348	A-42375-0314
17	22-28-4178	A-42375-0297	35	22-28-4358	A-42375-0315
18	22-28-4188	A-42375-0298	36	22-28-4368	A-42375-0316
19	22-28-4198	A-42375-0299			

ENG. NO: A-42375-0317/0351	
HEADER NUMBER:	42312-0036
PIN NUMBER:	42663-ADA154
PIN LENGTH: L	.465 / 11.81
MATING LENGTH: M	.240 / 6.09
GOLD POINT: G	N/A
PC TAIL LENGTH: P	.135 / 3.43
TIN: T	OVERALL
CKTS:	2-36
KINKS:	SMES-42003
VOIDED CKTS:	NONE
PACKAGING:	BULK PK-40873-0041

CKTS	MATERIAL NUMBER	ENG NUMBER	CKTS	MATERIAL NUMBER	ENG NUMBER
02	22-28-5020	A-42375-0317	20	22-28-5200	A-42375-0335
03	22-28-5030	A-42375-0318	21	22-28-5210	A-42375-0336
04	22-28-5040	A-42375-0319	22	22-28-5220	A-42375-0337
05	22-28-5050	A-42375-0320	23	22-28-5230	A-42375-0338
06	22-28-5060	A-42375-0321	24	22-28-5240	A-42375-0339
07	22-28-5070	A-42375-0322	25	22-28-5250	A-42375-0340
08	22-28-5080	A-42375-0323	26	22-28-5260	A-42375-0341
09	22-28-5090	A-42375-0324	27	22-28-5270	A-42375-0342
10	22-28-5100	A-42375-0325	28	22-28-5280	A-42375-0343
11	22-28-5110	A-42375-0326	29	22-28-5290	A-42375-0344
12	22-28-5120	A-42375-0327	30	22-28-5300	A-42375-0345
13	22-28-5130	A-42375-0328	31	22-28-5310	A-42375-0346
14	22-28-5140	A-42375-0329	32	22-28-5320	A-42375-0347
15	22-28-5150	A-42375-0330	33	22-28-5330	A-42375-0348
16	22-28-5160	A-42375-0331	34	22-28-5340	A-42375-0349
17	22-28-5170	A-42375-0332	35	22-28-5350	A-42375-0350
18	22-28-5180	A-42375-0333	36	22-28-5360	A-42375-0351
19	22-28-5190	A-42375-0334			

REV:	ECR/ECN INFORMATION:	TITLE:	SHEET No.
U	EC No.: **UCP2017-2793** DATE: **12/20/2021**	**KK 100 HEADER ASSY FLAT VERTICAL BREAKAWAY**	**- 6 -**

DOCUMENT NUMBER:	CREATED / REVISED BY:	CHECKED BY:	APPROVED BY:
SD- 42375-001	**SS06**	**ISHWARG**	**ISHWARG**

ENG. NO: A-42375-0352/0386	
HEADER NUMBER:	42312-0036
PIN NUMBER:	42663-ADB208
PIN LENGTH: L	.465 / 11.81
MATING LENGTH: M	.240 / 6.09
GOLD POINT: G	.100 / 2.54
PC TAIL LENGTH: P	.135 / 3.43
TIN: T	.100 / 2.54
CKTS:	2-36
KINKS:	SMES-42003
VOIDED CKTS:	NONE
PACKAGING:	BULK PK-40873-0041

CKTS	MATERIAL NUMBER	ENG NUMBER	CKTS	MATERIAL NUMBER	ENG NUMBER
02	22-28-5023	A-42375-0352	20	22-28-5203	A-42375-0370
03	22-28-5033	A-42375-0353	21	22-28-5213	A-42375-0371
04	22-28-5043	A-42375-0354	22	22-28-5223	A-42375-0372
05	22-28-5053	A-42375-0355	23	22-28-5233	A-42375-0373
06	22-28-5063	A-42375-0356	24	22-28-5243	A-42375-0374
07	22-28-5073	A-42375-0357	25	22-28-5253	A-42375-0375
08	22-28-5083	A-42375-0358	26	22-28-5263	A-42375-0376
09	22-28-5093	A-42375-0359	27	22-28-5273	A-42375-0377
10	22-28-5103	A-42375-0360	28	22-28-5283	A-42375-0378
11	22-28-5113	A-42375-0361	29	22-28-5293	A-42375-0379
12	22-28-5123	A-42375-0362	30	22-28-5303	A-42375-0380
13	22-28-5133	A-42375-0363	31	22-28-5313	A-42375-0381
14	22-28-5143	A-42375-0364	32	22-28-5323	A-42375-0382
15	22-28-5153	A-42375-0365	33	22-28-5333	A-42375-0383
16	22-28-5163	A-42375-0366	34	22-28-5343	A-42375-0384
17	22-28-5173	A-42375-0367	35	22-28-5353	A-42375-0385
18	22-28-5183	A-42375-0368	36	22-28-5363	A-42375-0386
19	22-28-5193	A-42375-0369			

ENG. NO: A-42375-0387/0421	
HEADER NUMBER:	42312-0036
PIN NUMBER:	42663-ADB228
PIN LENGTH: L	.465 / 11.81
MATING LENGTH: M	.240 / 6.09
GOLD POINT: G	.100 / 2.54
PC TAIL LENGTH: P	.135 / 3.43
TIN: T	.100 / 2.54
CKTS:	2-36
KINKS:	SMES-42003
VOIDED CKTS:	NONE
PACKAGING:	BULK PK-40873-0041

CKTS	MATERIAL NUMBER	ENG NUMBER	CKTS	MATERIAL NUMBER	ENG NUMBER
02	22-28-5026	A-42375-0387	20	22-28-5206	A-42375-0405
03	22-28-5036	A-42375-0388	21	22-28-5216	A-42375-0406
04	22-28-5046	A-42375-0389	22	22-28-5226	A-42375-0407
05	22-28-5056	A-42375-0390	23	22-28-5236	A-42375-0408
06	22-28-5066	A-42375-0391	24	22-28-5246	A-42375-0409
07	22-28-5076	A-42375-0392	25	22-28-5256	A-42375-0410
08	22-28-5086	A-42375-0393	26	22-28-5266	A-42375-0411
09	22-28-5096	A-42375-0394	27	22-28-5276	A-42375-0412
10	22-28-5106	A-42375-0395	28	22-28-5286	A-42375-0413
11	22-28-5116	A-42375-0396	29	22-28-5296	A-42375-0414
12	22-28-5126	A-42375-0397	30	22-28-5306	A-42375-0415
13	22-28-5136	A-42375-0398	31	22-28-5316	A-42375-0416
14	22-28-5146	A-42375-0399	32	22-28-5326	A-42375-0417
15	22-28-5156	A-42375-0400	33	22-28-5336	A-42375-0418
16	22-28-5166	A-42375-0401	34	22-28-5346	A-42375-0419
17	22-28-5176	A-42375-0402	35	22-28-5356	A-42375-0420
18	22-28-5186	A-42375-0403	36	22-28-5366	A-42375-0421
19	22-28-5196	A-42375-0404			

REV:	ECR/ECN INFORMATION:	TITLE:	SHEET No.
U	EC No.: **UCP2017-2793** DATE: **12/20/2021**	**KK 100 HEADER ASSY FLAT VERTICAL BREAKAWAY**	**- 7 -**

DOCUMENT NUMBER:	CREATED / REVISED BY:	CHECKED BY:	APPROVED BY:
SD- 42375-001	**SS06**	**ISHWARG**	**ISHWARG**

ENG. NO: A-42375-0422/0456	
HEADER NUMBER:	42312-0036
PIN NUMBER:	42663-AYA154
PIN LENGTH: L	.545 / 13.84
MATING LENGTH: M	.320 / 8.13
GOLD POINT: G	N/A
PC TAIL LENGTH: P	.135 / 3.43
TIN: T	OVERALL
CKTS:	2-36
KINKS:	SMES-42003
VOIDED CKTS:	NONE
PACKAGING:	BULK PK-40873-0041

CKTS	MATERIAL NUMBER	ENG NUMBER	CKTS	MATERIAL NUMBER	ENG NUMBER
02	22-28-5021	A-42375-0422	20	22-28-5201	A-42375-0440
03	22-28-5031	A-42375-0423	21	22-28-5211	A-42375-0441
04	22-28-5041	A-42375-0424	22	22-28-5221	A-42375-0442
05	22-28-5051	A-42375-0425	23	22-28-5231	A-42375-0443
06	22-28-5061	A-42375-0426	24	22-28-5241	A-42375-0444
07	22-28-5071	A-42375-0427	25	22-28-5251	A-42375-0445
08	22-28-5081	A-42375-0428	26	22-28-5261	A-42375-0446
09	22-28-5091	A-42375-0429	27	22-28-5271	A-42375-0447
10	22-28-5101	A-42375-0430	28	22-28-5281	A-42375-0448
11	22-28-5111	A-42375-0431	29	22-28-5291	A-42375-0449
12	22-28-5121	A-42375-0432	30	22-28-5301	A-42375-0450
13	22-28-5131	A-42375-0433	31	22-28-5311	A-42375-0451
14	22-28-5141	A-42375-0434	32	22-28-5321	A-42375-0452
15	22-28-5151	A-42375-0435	33	22-28-5331	A-42375-0453
16	22-28-5161	A-42375-0436	34	22-28-5341	A-42375-0454
17	22-28-5171	A-42375-0437	35	22-28-5351	A-42375-0455
18	22-28-5181	A-42375-0438	36	22-28-5361	A-42375-0456
19	22-28-5191	A-42375-0439			

ENG. NO: A-42375-0457/0491	
HEADER NUMBER:	42312-0036
PIN NUMBER:	42663-AYB208
PIN LENGTH: L	.545 / 13.84
MATING LENGTH: M	.320 / 8.13
GOLD POINT: G	.140 / 3.56
PC TAIL LENGTH: P	.135 / 3.43
TIN: T	.135 / 3.43
CKTS:	2-36
KINKS:	SMES-42003
VOIDED CKTS:	NONE
PACKAGING:	BULK PK-40873-0041

CKTS	MATERIAL NUMBER	ENG NUMBER	CKTS	MATERIAL NUMBER	ENG NUMBER
02	22-28-5024	A-42375-0457	20	22-28-5204	A-42375-0475
03	22-28-5034	A-42375-0458	21	22-28-5214	A-42375-0476
04	22-28-5044	A-42375-0459	22	22-28-5224	A-42375-0477
05	22-28-5054	A-42375-0460	23	22-28-5234	A-42375-0478
06	22-28-5064	A-42375-0461	24	22-28-5244	A-42375-0479
07	22-28-5074	A-42375-0462	25	22-28-5254	A-42375-0480
08	22-28-5084	A-42375-0463	26	22-28-5264	A-42375-0481
09	22-28-5094	A-42375-0464	27	22-28-5274	A-42375-0482
10	22-28-5104	A-42375-0465	28	22-28-5284	A-42375-0483
11	22-28-5114	A-42375-0466	29	22-28-5294	A-42375-0484
12	22-28-5124	A-42375-0467	30	22-28-5304	A-42375-0485
13	22-28-5134	A-42375-0468	31	22-28-5314	A-42375-0486
14	22-28-5144	A-42375-0469	32	22-28-5324	A-42375-0487
15	22-28-5154	A-42375-0470	33	22-28-5334	A-42375-0488
16	22-28-5164	A-42375-0471	34	22-28-5344	A-42375-0489
17	22-28-5174	A-42375-0472	35	22-28-5354	A-42375-0490
18	22-28-5184	A-42375-0473	36	22-28-5364	A-42375-0491
19	22-28-5194	A-42375-0474			

REV:	ECR/ECN INFORMATION:	TITLE:	SHEET No.
U	EC No.: **UCP2017-2793** DATE: **12/20/2021**	**KK 100 HEADER ASSY FLAT VERTICAL BREAKAWAY**	**- 8 -**

DOCUMENT NUMBER:	CREATED / REVISED BY:	CHECKED BY:	APPROVED BY:
SD- 42375-001	**SS06**	**ISHWARG**	**ISHWARG**

ENG. NO: A-42375-0492/0526	
HEADER NUMBER:	42312-0036
PIN NUMBER:	42663-AYB228
PIN LENGTH: L	.545 / 13.84
MATING LENGTH: M	.320 / 8.13
GOLD POINT: G	.140 / 3.56
PC TAIL LENGTH: P	.135 / 3.43
TIN: T	.135 / 3.43
CKTS:	2-36
KINKS:	SMES-42003
VOIDED CKTS:	NONE
PACKAGING:	BULK PK-40873-0041

CKTS	MATERIAL NUMBER	ENG NUMBER	CKTS	MATERIAL NUMBER	ENG NUMBER
02	22-28-5027	A-42375-0492	20	22-28-5207	A-42375-0510
03	22-28-5037	A-42375-0493	21	22-28-5217	A-42375-0511
04	22-28-5047	A-42375-0494	22	22-28-5227	A-42375-0512
05	22-28-5057	A-42375-0495	23	22-28-5237	A-42375-0513
06	22-28-5067	A-42375-0496	24	22-28-5247	A-42375-0514
07	22-28-5077	A-42375-0497	25	22-28-5257	A-42375-0515
08	22-28-5087	A-42375-0498	26	22-28-5267	A-42375-0516
09	22-28-5097	A-42375-0499	27	22-28-5277	A-42375-0517
10	22-28-5107	A-42375-0500	28	22-28-5287	A-42375-0518
11	22-28-5117	A-42375-0501	29	22-28-5297	A-42375-0519
12	22-28-5127	A-42375-0502	30	22-28-5307	A-42375-0520
13	22-28-5137	A-42375-0503	31	22-28-5317	A-42375-0521
14	22-28-5147	A-42375-0504	32	22-28-5327	A-42375-0522
15	22-28-5157	A-42375-0505	33	22-28-5337	A-42375-0523
16	22-28-5167	A-42375-0506	34	22-28-5347	A-42375-0524
17	22-28-5177	A-42375-0507	35	22-28-5357	A-42375-0525
18	22-28-5187	A-42375-0508	36	22-28-5367	A-42375-0526
19	22-28-5197	A-42375-0509			

ENG. NO: A-42375-0527/0561	
HEADER NUMBER:	42312-0036
PIN NUMBER:	42663-ARA154
PIN LENGTH: L	.520 / 13.21
MATING LENGTH: M	.295 / 7.49
GOLD POINT: G	N/A
PC TAIL LENGTH: P	.135 / 3.43
TIN: T	OVERALL
CKTS:	2-36
KINKS:	SMES-42003
VOIDED CKTS:	NONE
PACKAGING:	BULK PK-40873-0041

CKTS	MATERIAL NUMBER	ENG NUMBER	CKTS	MATERIAL NUMBER	ENG NUMBER
02	22-28-5022	A-42375-0527	20	22-28-5202	A-42375-0545
03	22-28-5032	A-42375-0528	21	22-28-5212	A-42375-0546
04	22-28-5042	A-42375-0529	22	22-28-5222	A-42375-0547
05	22-28-5052	A-42375-0530	23	22-28-5232	A-42375-0548
06	22-28-5062	A-42375-0531	24	22-28-5242	A-42375-0549
07	22-28-5072	A-42375-0532	25	22-28-5252	A-42375-0550
08	22-28-5082	A-42375-0533	26	22-28-5262	A-42375-0551
09	22-28-5092	A-42375-0534	27	22-28-5272	A-42375-0552
10	22-28-5102	A-42375-0535	28	22-28-5282	A-42375-0553
11	22-28-5112	A-42375-0536	29	22-28-5292	A-42375-0554
12	22-28-5122	A-42375-0537	30	22-28-5302	A-42375-0555
13	22-28-5132	A-42375-0538	31	22-28-5312	A-42375-0556
14	22-28-5142	A-42375-0539	32	22-28-5322	A-42375-0557
15	22-28-5152	A-42375-0540	33	22-28-5332	A-42375-0558
16	22-28-5162	A-42375-0541	34	22-28-5342	A-42375-0559
17	22-28-5172	A-42375-0542	35	22-28-5352	A-42375-0560
18	22-28-5182	A-42375-0543	36	22-28-5362	A-42375-0561
19	22-28-5192	A-42375-0544			

REV:	ECR/ECN INFORMATION:	TITLE:	SHEET No.
U	EC No.: **UCP2017-2793** DATE: **12/20/2021**	**KK 100 HEADER ASSY FLAT VERTICAL BREAKAWAY**	**- 9 -**

DOCUMENT NUMBER:	CREATED / REVISED BY:	CHECKED BY:	APPROVED BY:
SD- 42375-001	**SS06**	**ISHWARG**	**ISHWARG**

ENG. NO: A-42375-0562/0596	
HEADER NUMBER:	42312-0036
PIN NUMBER:	42663-ARB208
PIN LENGTH: L	.520 / 13.21
MATING LENGTH: M	.295 / 7.49
GOLD POINT: G	.140 / 3.56
PC TAIL LENGTH: P	.135 / 3.43
TIN: T	.135 / 3.43
CKTS:	2-36
KINKS:	SMES-42003
VOIDED CKTS:	NONE
PACKAGING:	BULK PK-40873-0041

CKTS	MATERIAL NUMBER	ENG NUMBER	CKTS	MATERIAL NUMBER	ENG NUMBER
02	22-28-5025	A-42375-0562	20	22-28-5205	A-42375-0580
03	22-28-5035	A-42375-0563	21	22-28-5215	A-42375-0581
04	22-28-5045	A-42375-0564	22	22-28-5225	A-42375-0582
05	22-28-5055	A-42375-0565	23	22-28-5235	A-42375-0583
06	22-28-5065	A-42375-0566	24	22-28-5245	A-42375-0584
07	22-28-5075	A-42375-0567	25	22-28-5255	A-42375-0585
08	22-28-5085	A-42375-0568	26	22-28-5265	A-42375-0586
09	22-28-5095	A-42375-0569	27	22-28-5275	A-42375-0587
10	22-28-5105	A-42375-0570	28	22-28-5285	A-42375-0588
11	22-28-5115	A-42375-0571	29	22-28-5295	A-42375-0589
12	22-28-5125	A-42375-0572	30	22-28-5305	A-42375-0590
13	22-28-5135	A-42375-0573	31	22-28-5315	A-42375-0591
14	22-28-5145	A-42375-0574	32	22-28-5325	A-42375-0592
15	22-28-5155	A-42375-0575	33	22-28-5335	A-42375-0593
16	22-28-5165	A-42375-0576	34	22-28-5345	A-42375-0594
17	22-28-5175	A-42375-0577	35	22-28-5355	A-42375-0595
18	22-28-5185	A-42375-0578	36	22-28-5365	A-42375-0596
19	22-28-5195	A-42375-0579			

ENG. NO: A-42375-0597/0631	
HEADER NUMBER:	42312-0036
PIN NUMBER:	42663-ARB228
PIN LENGTH: L	.520 / 13.21
MATING LENGTH: M	.295 / 7.49
GOLD POINT: G	.140 / 3.56
PC TAIL LENGTH: P	.135 / 3.43
TIN: T	.135 / 3.43
CKTS:	2-36
KINKS:	SMES-42003
VOIDED CKTS:	NONE
PACKAGING:	BULK PK-40873-0041

CKTS	MATERIAL NUMBER	ENG NUMBER	CKTS	MATERIAL NUMBER	ENG NUMBER
02	22-28-5028	A-42375-0597	20	22-28-5208	A-42375-0615
03	22-28-5038	A-42375-0598	21	22-28-5218	A-42375-0616
04	22-28-5048	A-42375-0599	22	22-28-5228	A-42375-0617
05	22-28-5058	A-42375-0600	23	22-28-5238	A-42375-0618
06	22-28-5068	A-42375-0601	24	22-28-5248	A-42375-0619
07	22-28-5078	A-42375-0602	25	22-28-5258	A-42375-0620
08	22-28-5088	A-42375-0603	26	22-28-5268	A-42375-0621
09	22-28-5098	A-42375-0604	27	22-28-5278	A-42375-0622
10	22-28-5108	A-42375-0605	28	22-28-5288	A-42375-0623
11	22-28-5118	A-42375-0606	29	22-28-5298	A-42375-0624
12	22-28-5128	A-42375-0607	30	22-28-5308	A-42375-0625
13	22-28-5138	A-42375-0608	31	22-28-5318	A-42375-0626
14	22-28-5148	A-42375-0609	32	22-28-5328	A-42375-0627
15	22-28-5158	A-42375-0610	33	22-28-5338	A-42375-0628
16	22-28-5168	A-42375-0611	34	22-28-5348	A-42375-0629
17	22-28-5178	A-42375-0612	35	22-28-5358	A-42375-0630
18	22-28-5188	A-42375-0613	36	22-28-5368	A-42375-0631
19	22-28-5198	A-42375-0614			

REV:	ECR/ECN INFORMATION:	TITLE:	SHEET No.
U	EC No.: **UCP2017-2793** DATE: **12/20/2021**	**KK 100 HEADER ASSY FLAT VERTICAL BREAKAWAY**	**- 10 -**

DOCUMENT NUMBER:	CREATED / REVISED BY:	CHECKED BY:	APPROVED BY:
SD- 42375-001	**SS06**	**ISHWARG**	**ISHWARG**

ENG. NO: A-42375-0667/0699	
HEADER NUMBER:	42312-0036
PIN NUMBER:	42663-ABB208
PIN LENGTH: L	.455 / 11.56
MATING LENGTH: M	.240 / 6.09
GOLD POINT: G	.100 / 2.54
PC TAIL LENGTH: P	.125 / 3.18
TIN: T	.100 / 2.54
CKTS:	4-36
KINKS:	NO
VOIDED CKTS:	4
PACKAGING:	BULK PK-40873-0041

CKTS	MATERIAL NUMBER	ENG NUMBER	CKTS	MATERIAL NUMBER	ENG NUMBER
02			20	42375-0683	A-42375-0683
03			21	42375-0684	A-42375-0684
04	42375-0667	A-42375-0667	22	42375-0685	A-42375-0685
05	42375-0668	A-42375-0668	23	42375-0686	A-42375-0686
06	22-30-3060	A-42375-0669	24	42375-0687	A-42375-0687
07	42375-0670	A-42375-0670	25	42375-0688	A-42375-0688
08	42375-0671	A-42375-0671	26	42375-0689	A-42375-0689
09	42375-0672	A-42375-0672	27	42375-0690	A-42375-0690
10	42375-0673	A-42375-0673	28	42375-0691	A-42375-0691
11	42375-0674	A-42375-0674	29	42375-0692	A-42375-0692
12	22-30-3120	A-42375-0675	30	42375-0693	A-42375-0693
13	42375-0676	A-42375-0676	31	42375-0694	A-42375-0694
14	42375-0677	A-42375-0677	32	42375-0695	A-42375-0695
15	42375-0678	A-42375-0678	33	42375-0696	A-42375-0696
16	42375-0679	A-42375-0679	34	42375-0697	A-42375-0697
17	42375-0680	A-42375-0680	35	42375-0698	A-42375-0698
18	42375-0681	A-42375-0681	36	42375-0699	A-42375-0699
19	42375-0682	A-42375-0682			

ENG. NO: A-42375-0700/0732	
HEADER NUMBER:	42312-0036
PIN NUMBER:	42663-ADB208
PIN LENGTH: L	.465 /11.81
MATING LENGTH: M	.240 / 6.09
GOLD POINT: G	.100 / 2.54
PC TAIL LENGTH: P	.135 / 3.43
TIN: T	.100 / 2.54
CKTS:	4-36
KINKS:	SMES-42003
VOIDED CKTS:	4
PACKAGING:	BULK PK-40873-0041

CKTS	MATERIAL NUMBER	ENG NUMBER	CKTS	MATERIAL NUMBER	ENG NUMBER
02			20	42375-0716	A-42375-0716
03			21	42375-0717	A-42375-0717
04	42375-0700	A-42375-0700	22	42375-0718	A-42375-0718
05	42375-0701	A-42375-0701	23	42375-0719	A-42375-0719
06	22-30-3061	A-42375-0702	24	42375-0720	A-42375-0720
07	42375-0703	A-42375-0703	25	42375-0721	A-42375-0721
08	42375-0704	A-42375-0704	26	42375-0722	A-42375-0722
09	42375-0705	A-42375-0705	27	42375-0723	A-42375-0723
10	42375-0706	A-42375-0706	28	42375-0724	A-42375-0724
11	42375-0707	A-42375-0707	29	42375-0725	A-42375-0725
12	42375-0708	A-42375-0708	30	42375-0726	A-42375-0726
13	42375-0709	A-42375-0709	31	42375-0727	A-42375-0727
14	42375-0710	A-42375-0710	32	42375-0728	A-42375-0728
15	42375-0711	A-42375-0711	33	42375-0729	A-42375-0729
16	42375-0712	A-42375-0712	34	42375-0730	A-42375-0730
17	42375-0713	A-42375-0713	35	42375-0731	A-42375-0731
18	42375-0714	A-42375-0714	36	42375-0732	A-42375-0732
19	42375-0715	A-42375-0715			

REV:	ECR/ECN INFORMATION:	TITLE:	SHEET No.
U	EC No.: **UCP2017-2793** DATE: **12/20/2021**	**KK 100 HEADER ASSY FLAT VERTICAL BREAKAWAY**	**- 11 -**

DOCUMENT NUMBER:	CREATED / REVISED BY:	CHECKED BY:	APPROVED BY:
SD- 42375-001	**SS06**	**ISHWARG**	**ISHWARG**

ENG. NO: A-42375-0836/0870	
HEADER NUMBER:	42312-0036
PIN NUMBER:	42663-BSA154
PIN LENGTH: L	.630 / 16.00
MATING LENGTH: M	.405/10.29
GOLD POINT: G	N/A
PC TAIL LENGTH: P	.135/3.43
TIN: T	OVERALL
CKTS:	2-36
KINKS:	SMES-42003
VOIDED CKTS:	NONE
PACKAGING:	BULK PK-40873-0041

CKTS	MATERIAL NUMBER	ENG NUMBER	CKTS	MATERIAL NUMBER	ENG NUMBER
02		A-42375-0836	20	22-30-3203	A-42375-0854
03	22-30-3033	A-42375-0837	21	22-30-3213	A-42375-0855
04	22-30-3043	A-42375-0838	22	22-30-3223	A-42375-0856
05	22-30-3053	A-42375-0839	23	22-30-3233	A-42375-0857
06	22-30-3063	A-42375-0840	24	22-30-3243	A-42375-0858
07	22-30-3073	A-42375-0841	25	22-30-3253	A-42375-0859
08	22-30-3083	A-42375-0842	26	22-30-3263	A-42375-0860
09	22-30-3093	A-42375-0843	27	22-30-3273	A-42375-0861
10	22-30-3103	A-42375-0844	28	22-30-3283	A-42375-0862
11	22-30-3113	A-42375-0845	29	22-30-3293	A-42375-0863
12	22-30-3123	A-42375-0846	30	22-30-3303	A-42375-0864
13	22-30-3133	A-42375-0847	31	22-30-3313	A-42375-0865
14	22-30-3143	A-42375-0848	32	22-30-3323	A-42375-0866
15	22-30-3153	A-42375-0849	33	22-30-3333	A-42375-0867
16	22-30-3163	A-42375-0850	34	22-30-3343	A-42375-0868
17	22-30-3173	A-42375-0851	35	22-30-3353	A-42375-0869
18	22-30-3183	A-42375-0852	36	22-30-3363	A-42375-0870
19	22-30-3193	A-42375-0853			

REV:	ECR/ECN INFORMATION:	TITLE:	SHEET No.
U	EC No.: **UCP2017-2793** DATE: **12/20/2021**	**KK 100 HEADER ASSY FLAT VERTICAL BREAKAWAY**	**- 12 -**

DOCUMENT NUMBER:	CREATED / REVISED BY:	CHECKED BY:	APPROVED BY:
SD- 42375-001	**SS06**	**ISHWARG**	**ISHWARG**

ENG. NO: A-42375-0871/0904	
HEADER NUMBER:	42312-0036
PIN NUMBER:	42663-ATA154
PIN LENGTH: L	.530 / 13.46
MATING LENGTH: M	.320 / 8.13
GOLD POINT: G	N/A
PC TAIL LENGTH: P	.120 / 3.05
TIN: T	OVERALL
CKTS:	3-36
KINKS:	NO
VOIDED CKTS:	2
PACKAGING:	BULK PK-40873-0041

CKTS	MATERIAL NUMBER	ENG NUMBER	CKTS	MATERIAL NUMBER	ENG NUMBER
02			20	22-30-3204	A-42375-0888
03	22-30-3034	A-42375-0871	21	22-30-3214	A-42375-0889
04	22-30-3044	A-42375-0872	22	22-30-3224	A-42375-0890
05	22-30-3054	A-42375-0873	23	22-30-3234	A-42375-0891
06	22-30-3064	A-42375-0874	24	22-30-3244	A-42375-0892
07	22-30-3074	A-42375-0875	25	22-30-3254	A-42375-0893
08	22-30-3084	A-42375-0876	26	22-30-3264	A-42375-0894
09	22-30-3094	A-42375-0877	27	22-30-3274	A-42375-0895
10	22-30-3104	A-42375-0878	28	22-30-3284	A-42375-0896
11	22-30-3114	A-42375-0879	29	22-30-3294	A-42375-0897
12	22-30-3124	A-42375-0880	30	22-30-3304	A-42375-0898
13	22-30-3134	A-42375-0881	31	22-30-3314	A-42375-0899
14	22-30-3144	A-42375-0882	32	22-30-3324	A-42375-0900
15	22-30-3154	A-42375-0883	33	22-30-3334	A-42375-0901
16	22-30-3164	A-42375-0884	34	22-30-3344	A-42375-0902
17	22-30-3174	A-42375-0885	35	22-30-3354	A-42375-0903
18	22-30-3184	A-42375-0886	36	22-30-3364	A-42375-0904
19	22-30-3194	A-42375-0887			

ENG. NO: A-42375-0973/1001	
HEADER NUMBER:	42312-0036
PIN NUMBER:	42663-ABA154
PIN LENGTH: L	.455 / 11.56
MATING LENGTH: M	.240 / 6.09
GOLD POINT: G	N/A
PC TAIL LENGTH: P	.125 / 3.18
TIN: T	OVERALL
CKTS:	8-36
KINKS:	NO
VOIDED CKTS:	3,8
PACKAGING:	BULK PK-40873-0041

CKTS	MATERIAL NUMBER	ENG NUMBER	CKTS	MATERIAL NUMBER	ENG NUMBER
02			20	42375-0985	A-42375-0985
03			21	42375-0986	A-42375-0986
04			22	42375-0987	A-42375-0987
05			23	42375-0988	A-42375-0988
06			24	42375-0989	A-42375-0989
07			25	42375-0990	A-42375-0990
08	42375-0973	A-42375-0973	26	42375-0991	A-42375-0991
09	42375-0974	A-42375-0974	27	42375-0992	A-42375-0992
10	22-30-3107	A-42375-0975	28	42375-0993	A-42375-0993
11	42375-0976	A-42375-0976	29	42375-0994	A-42375-0994
12	42375-0977	A-42375-0977	30	42375-0995	A-42375-0995
13	42375-0978	A-42375-0978	31	42375-0996	A-42375-0996
14	42375-0979	A-42375-0979	32	42375-0997	A-42375-0997
15	42375-0980	A-42375-0980	33	42375-0998	A-42375-0998
16	42375-0981	A-42375-0981	34	42375-0999	A-42375-0999
17	42375-0982	A-42375-0982	35	42375-1000	A-42375-1000
18	42375-0983	A-42375-0983	36	42375-1001	A-42375-1001
19	42375-0984	A-42375-0984			

REV:	ECR/ECN INFORMATION:	TITLE:	SHEET No.
U	EC No.: **UCP2017-2793** DATE: **12/20/2021**	**KK 100 HEADER ASSY FLAT VERTICAL BREAKAWAY**	**- 13 -**

DOCUMENT NUMBER:	CREATED / REVISED BY:	CHECKED BY:	APPROVED BY:
SD- 42375-001	**SS06**	**ISHWARG**	**ISHWARG**

ENG. NO: A-42375-1105/1139	
HEADER NUMBER:	42312-0036
PIN NUMBER:	42663-ABB208
PIN LENGTH: L	.455 / 11.56
MATING LENGTH: M	.240 / 6.09
GOLD POINT: G	.100 / 2.54
PC TAIL LENGTH: P	.125 / 3.18
TIN: T	.100 / 2.54
CKTS:	2-36
KINKS:	NO
VOIDED CKTS:	2
PACKAGING:	BULK PK-40873-0041

CKTS	MATERIAL NUMBER	ENG NUMBER	CKTS	MATERIAL NUMBER	ENG NUMBER
02	42375-1105	A-42375-1105	20	42375-1123	A-42375-1123
03	42375-1106	A-42375-1106	21	42375-1124	A-42375-1124
04	42375-1107	A-42375-1107	22	42375-1125	A-42375-1125
05	42375-1108	A-42375-1108	23	42375-1126	A-42375-1126
06	42375-1109	A-42375-1109	24	42375-1127	A-42375-1127
07	42375-1110	A-42375-1110	25	42375-1128	A-42375-1128
08	42375-1111	A-42375-1111	26	42375-1129	A-42375-1129
09	22-30-3099	A-42375-1112	27	42375-1130	A-42375-1130
10	42375-1113	A-42375-1113	28	42375-1131	A-42375-1131
11	42375-1114	A-42375-1114	29	42375-1132	A-42375-1132
12	42375-1115	A-42375-1115	30	42375-1133	A-42375-1133
13	42375-1116	A-42375-1116	31	42375-1134	A-42375-1134
14	42375-1117	A-42375-1117	32	42375-1135	A-42375-1135
15	42375-1118	A-42375-1118	33	42375-1136	A-42375-1136
16	42375-1119	A-42375-1119	34	42375-1137	A-42375-1137
17	42375-1120	A-42375-1120	35	42375-1138	A-42375-1138
18	42375-1121	A-42375-1121	36	42375-1139	A-42375-1139
19	42375-1122	A-42375-1122			

ENG. NO: 42375-1244/1278	
HEADER NUMBER:	42312-0036
PIN NUMBER:	42663-ABA154
PIN LENGTH: L	.455 / 11.56
MATING LENGTH: M	.240 / 6.09
GOLD POINT: G	N/A
PC TAIL LENGTH: P	.125 / 3.18
TIN: T	OVERALL
CKTS:	2-36
KINKS:	NO
VOIDED CKTS:	2
PACKAGING:	BULK PK-40873-0041

CKTS	ITEM NUMBER	CKTS	ITEM NUMBER
02	42375-1244	20	42375-1262
03	42375-1245	21	42375-1263
04	42375-1246	22	42375-1264
05	42375-1247	23	42375-1265
06	42375-1248	24	42375-1266
07	42375-1249	25	42375-1267
08	42375-1250	26	42375-1268
09	42375-1251	27	42375-1269
10	42375-1252	28	42375-1270
11	42375-1253	29	42375-1271
12	42375-1254	30	42375-1272
13	42375-1255	31	42375-1273
14	42375-1256	32	42375-1274
15	42375-1257	33	42375-1275
16	42375-1258	34	42375-1276
17	42375-1259	35	42375-1277
18	42375-1260	36	42375-1278
19	42375-1261		

REV:	ECR/ECN INFORMATION:	TITLE:	SHEET No.
U	EC No.: **UCP2017-2793** DATE: **12/20/2021**	**KK 100 HEADER ASSY FLAT VERTICAL BREAKAWAY**	**- 14 -**

DOCUMENT NUMBER:	CREATED / REVISED BY:	CHECKED BY:	APPROVED BY:
SD- 42375-001	**SS06**	**ISHWARG**	**ISHWARG**

ENG. NO: 42375-1349/1382	
HEADER NUMBER:	42312-0036
PIN NUMBER:	42663-ABA154
PIN LENGTH: L	.455 / 11.56
MATING LENGTH: M	.230 / 5.84
GOLD POINT: G	N/A
PC TAIL LENGTH: P	.135 / 3.43
TIN: T	OVERALL
CKTS:	3-36
KINKS:	SMES-42003
VOIDED CKTS:	2
PACKAGING:	BULK PK-40873-0041

CKTS	ITEM NUMBER	CKTS	ITEM NUMBER
02		20	42375-1366
03	42375-1349	21	42375-1367
04	42375-1350	22	42375-1368
05	42375-1351	23	42375-1369
06	42375-1352	24	42375-1370
07	42375-1353	25	42375-1371
08	42375-1354	26	42375-1372
09	42375-1355	27	42375-1373
10	42375-1356	28	42375-1374
11	42375-1357	29	42375-1375
12	42375-1358	30	42375-1376
13	42375-1359	31	42375-1377
14	42375-1360	32	42375-1378
15	42375-1361	33	42375-1379
16	42375-1362	34	42375-1380
17	42375-1363	35	42375-1381
18	42375-1364	36	42375-1382
19	42375-1365		

ENG. NO: 42375-1515/1548	
HEADER NUMBER:	42312-0036
PIN NUMBER:	42663-ABB208
PIN LENGTH: L	.455 / 11.56
MATING LENGTH: M	.230 / 5.84
GOLD POINT: G	.140 / 3.56
PC TAIL LENGTH: P	.135 / 3.43
TIN: T	.100 / 2.54
CKTS:	3-36
KINKS:	SMES-42003
VOIDED CKTS:	2
PACKAGING:	BULK PK-40873-0041

CKTS	ITEM NUMBER	CKTS	ITEM NUMBER
02		20	42375-1532
03	42375-1515	21	42375-1533
04	42375-1516	22	42375-1534
05	42375-1517	23	42375-1535
06	42375-1518	24	42375-1536
07	42375-1519	25	42375-1537
08	42375-1520	26	42375-1538
09	42375-1521	27	42375-1539
10	42375-1522	28	42375-1540
11	42375-1523	29	42375-1541
12	42375-1524	30	42375-1542
13	42375-1525	31	42375-1543
14	42375-1526	32	42375-1544
15	42375-1527	33	42375-1545
16	42375-1528	34	42375-1546
17	42375-1529	35	42375-1547
18	42375-1530	36	42375-1548
19	42375-1531		

REV:	ECR/ECN INFORMATION:	TITLE:	SHEET No.
U	EC No.: **UCP2017-2793** DATE: **12/20/2021**	**KK 100 HEADER ASSY FLAT VERTICAL BREAKAWAY**	**- 15 -**

DOCUMENT NUMBER:	CREATED / REVISED BY:	CHECKED BY:	APPROVED BY:
SD- 42375-001	**SS06**	**ISHWARG**	**ISHWARG**

ENG. NO: 42375-1720/1753	
HEADER NUMBER:	42312-0036
PIN NUMBER:	42663-ABB208
PIN LENGTH: L	.455 / 11.56
MATING LENGTH: M	.240 / 6.09
GOLD POINT: G	.140 / 3.56
PC TAIL LENGTH: P	.125 / 3.18
TIN: T	.100 / 2.54
CKTS:	3-36
KINKS:	NO
VOIDED CKTS:	3
PACKAGING:	BULK PK-40873-0041

CKTS	ITEM NUMBER	CKTS	ITEM NUMBER
02		20	42375-1737
03	42375-1720	21	42375-1738
04	42375-1721	22	42375-1739
05	42375-1722	23	42375-1740
06	42375-1723	24	42375-1741
07	42375-1724	25	42375-1742
08	42375-1725	26	42375-1743
09	42375-1726	27	42375-1744
10	42375-1727	28	42375-1745
11	42375-1728	29	42375-1746
12	42375-1729	30	42375-1747
13	42375-1730	31	42375-1748
14	42375-1731	32	42375-1749
15	42375-1732	33	42375-1750
16	42375-1733	34	42375-1751
17	42375-1734	35	42375-1752
18	42375-1735	36	42375-1753
19	42375-1736		

ENG. NO: 42375-1855/1889	
HEADER NUMBER:	42312-0036
PIN NUMBER:	42663-CJA154
PIN LENGTH: L	.700 / 17.78
MATING LENGTH: M	.488 / 12.40
GOLD POINT: G	N/A
PC TAIL LENGTH: P	.122 / 3.10
TIN: T	OVERALL
CKTS:	2-36
KINKS:	NO
VOIDED CKTS:	NONE
PACKAGING:	BULK PK-40873-0041

CKTS	ITEM NUMBER	CKTS	ITEM NUMBER
02	42375-1855	20	42375-1873
03	42375-1856	21	42375-1874
04	42375-1857	22	42375-1875
05	42375-1858	23	42375-1876
06	42375-1859	24	42375-1877
07	42375-1860	25	42375-1878
08	42375-1861	26	42375-1879
09	42375-1862	27	42375-1880
10	42375-1863	28	42375-1881
11	42375-1864	29	42375-1882
12	42375-1865	30	42375-1883
13	42375-1866	31	42375-1884
14	42375-1867	32	42375-1885
15	42375-1868	33	42375-1886
16	42375-1869	34	42375-1887
17	42375-1870	35	42375-1888
18	42375-1871	36	42375-1889
19	42375-1872		

REV:	ECR/ECN INFORMATION:	TITLE:	SHEET No.
U	EC No.: **UCP2017-2793** DATE: **12/20/2021**	**KK 100 HEADER ASSY FLAT VERTICAL BREAKAWAY**	**- 16 -**

DOCUMENT NUMBER:	CREATED / REVISED BY:	CHECKED BY:	APPROVED BY:
SD- 42375-001	**SS06**	**ISHWARG**	**ISHWARG**

ENG. NO: 42375-1922/1956	
HEADER NUMBER:	42312-0036
PIN NUMBER:	42663-AEA154
PIN LENGTH: L	.470 / 11.94
MATING LENGTH: M	.190 / 4.83
GOLD POINT: G	N/A
PC TAIL LENGTH: P	.190 / 4.83
TIN: T	.200 / 5.08
CKTS:	2-36
KINKS:	NO
VOIDED CKTS:	NONE
PACKAGING:	BULK PK-40873-0041

CKTS	ITEM NUMBER	CKTS	ITEM NUMBER
02	42375-1922	20	42375-1940
03	42375-1923	21	42375-1941
04	42375-1924	22	42375-1942
05	42375-1925	23	42375-1943
06	42375-1926	24	42375-1944
07	42375-1927	25	42375-1945
08	42375-1928	26	42375-1946
09	42375-1929	27	42375-1947
10	42375-1930	28	42375-1948
11	42375-1931	29	42375-1949
12	42375-1932	30	42375-1950
13	42375-1933	31	42375-1951
14	42375-1934	32	42375-1952
15	42375-1935	33	42375-1953
16	42375-1936	34	42375-1954
17	42375-1937	35	42375-1955
18	42375-1938	36	42375-1956
19	42375-1939		

ENG. NO: 42375-2246/2275	
HEADER NUMBER:	42312-0036
PIN NUMBER:	42663-ABA154
PIN LENGTH: L	.455 / 11.56
MATING LENGTH: M	.240 / 6.09
GOLD POINT: G	N/A
PC TAIL LENGTH: P	.125 / 3.18
TIN: T	OVERALL
CKTS:	7-36
KINKS:	NO
VOIDED CKTS:	2,7
PACKAGING:	BULK PK-40873-0041

CKTS	ITEM NUMBER	CKTS	ITEM NUMBER
02		20	42375-2259
03		21	42375-2260
04		22	42375-2261
05		23	42375-2262
06		24	42375-2263
07	42375-2246	25	42375-2264
08	42375-2247	26	42375-2265
09	42375-2248	27	42375-2266
10	42375-2249	28	42375-2267
11	42375-2250	29	42375-2268
12	42375-2251	30	42375-2269
13	42375-2252	31	42375-2270
14	42375-2253	32	42375-2271
15	42375-2254	33	42375-2272
16	42375-2255	34	42375-2273
17	42375-2256	35	42375-2274
18	42375-2257	36	42375-2275
19	42375-2258		

REV:	ECR/ECN INFORMATION:	TITLE:	SHEET No.
U	EC No.: **UCP2017-2793** DATE: **12/20/2021**	**KK 100 HEADER ASSY FLAT VERTICAL BREAKAWAY**	**- 17 -**

DOCUMENT NUMBER:	CREATED / REVISED BY:	CHECKED BY:	APPROVED BY:
SD- 42375-001	**SS06**	**ISHWARG**	**ISHWARG**

ENG. NO: 42375-2486/2520	
HEADER NUMBER:	42312-0036
PIN NUMBER:	42663-AFB208
PIN LENGTH: L	.475 / 12.07
MATING LENGTH: M	.232 / 5.89
GOLD POINT: G	.150 / 3.81
PC TAIL LENGTH: P	.153 / 3.89
TIN: T	.100 / 2.54
CKTS:	2-36
KINKS:	NO
VOIDED CKTS:	NONE
PACKAGING:	BULK PK-40873-0041

CKTS	ITEM NUMBER	CKTS	ITEM NUMBER
02	42375-2486	19	42375-2503
03	42375-2487	20	42375-2504
	68300-2008	21	42375-2505
04	42375-2488	22	42375-2506
05	42375-2489	23	42375-2507
06	42375-2490	24	42375-2508
07	42375-2491	25	42375-2509
08	42375-2492	26	42375-2510
09	42375-2493	27	42375-2511
10	42375-2494	28	42375-2512
11	42375-2495	29	42375-2513
12	42375-2496	30	42375-2514
13	42375-2497	31	42375-2515
14	42375-2498	32	42375-2516
15	42375-2499	33	42375-2517
16	42375-2500	34	42375-2518
17	42375-2501	35	42375-2519
18	42375-2502	36	42375-2520

ENG. NO: 42375-2521/2555	
HEADER NUMBER:	42312-0036
PIN NUMBER:	42663-AFB228
PIN LENGTH: L	.475 / 12.07
MATING LENGTH: M	.232 / 5.89
GOLD POINT: G	.150 / 3.81
PC TAIL LENGTH: P	.153 / 3.89
TIN: T	.100 / 2.54
CKTS:	2-36
KINKS:	NO
VOIDED CKTS:	NONE
PACKAGING:	BULK PK-40873-0041

CKTS	ITEM NUMBER	CKTS	ITEM NUMBER
02	42375-2521	20	42375-2539
03	42375-2522	21	42375-2540
04	42375-2523	22	42375-2541
05	42375-2524	23	42375-2542
06	42375-2525	24	42375-2543
07	42375-2526	25	42375-2544
08	42375-2527	26	42375-2545
09	42375-2528	27	42375-2546
10	42375-2529	28	42375-2547
11	42375-2530	29	42375-2548
12	42375-2531	30	42375-2549
13	42375-2532	31	42375-2550
14	42375-2533	32	42375-2551
15	42375-2534	33	42375-2552
16	42375-2535	34	42375-2553
17	42375-2536	35	42375-2554
18	42375-2537	36	42375-2555
19	42375-2538		

REV:	ECR/ECN INFORMATION:	TITLE:	SHEET No.
U	EC No.: **UCP2017-2793** DATE: **12/20/2021**	**KK 100 HEADER ASSY FLAT VERTICAL BREAKAWAY**	**- 18 -**

DOCUMENT NUMBER:	CREATED / REVISED BY:	CHECKED BY:	APPROVED BY:
SD- 42375-001	**SS06**	**ISHWARG**	**ISHWARG**

ENG. NO: 42375-2801/2835	
HEADER NUMBER:	42312-0036
PIN NUMBER:	42663-HDB228
PIN LENGTH: L	1.200 / 30.48
MATING LENGTH: M	1.000 / 25.40
GOLD POINT: G	.200 / 5.08
PC TAIL LENGTH: P	.110 / 2.79
TIN: T	.200 / 5.08
CKTS:	2-36
KINKS:	NO
VOIDED CKTS:	NONE
PACKAGING:	BULK PK-40873-0043

CKTS	ITEM NUMBER	CKTS	ITEM NUMBER
02	42375-2801	20	42375-2819
03	42375-2802	21	42375-2820
04	42375-2803	22	42375-2821
05	42375-2804	23	42375-2822
06	42375-2805	24	42375-2823
07	42375-2806	25	42375-2824
08	42375-2807	26	42375-2825
09	42375-2808	27	42375-2826
10	42375-2809	28	42375-2827
11	42375-2810	29	42375-2828
12	42375-2811	30	42375-2829
13	42375-2812	31	42375-2830
14	42375-2813	32	42375-2831
15	42375-2814	33	42375-2832
16	42375-2815	34	42375-2833
17	42375-2816	35	42375-2834
18	42375-2817	36	42375-2835
19	42375-2818		

ENG. NO: 42375-2836/2870	
HEADER NUMBER:	42312-0036
PIN NUMBER:	42663-EMA154
PIN LENGTH: L	.925 / 23.50
MATING LENGTH: M	.625 / 15.88
GOLD POINT: G	N/A
PC TAIL LENGTH: P	.210 / 5.33
TIN: T	OVERALL
CKTS:	2-36
KINKS:	NO
VOIDED CKTS:	NONE
PACKAGING:	BULK PK-40873-0041

CKTS	ITEM NUMBER	CKTS	ITEM NUMBER
02	42375-2836	20	42375-2854
03	42375-2837	21	42375-2855
04	42375-2838	22	42375-2856
05	42375-2839	23	42375-2857
06	42375-2840	24	42375-2858
07	42375-2841	25	42375-2859
08	42375-2842	26	42375-2860
09	42375-2843	27	42375-2861
10	42375-2844	28	42375-2862
11	42375-2845	29	42375-2863
12	42375-2846	30	42375-2864
13	42375-2847	31	42375-2865
14	42375-2848	32	42375-2866
15	42375-2849	33	42375-2867
16	42375-2850	34	42375-2868
17	42375-2851	35	42375-2869
18	42375-2852	36	42375-2870
19	42375-2853		

REV:	ECR/ECN INFORMATION:	TITLE:	SHEET No.
U	EC No.: **UCP2017-2793** DATE: **12/20/2021**	**KK 100 HEADER ASSY FLAT VERTICAL BREAKAWAY**	**- 19 -**

DOCUMENT NUMBER:	CREATED / REVISED BY:	CHECKED BY:	APPROVED BY:
SD- 42375-001	**SS06**	**ISHWARG**	**ISHWARG**

ENG. NO: 42375-3044/3078	
HEADER NUMBER:	42312-0036
PIN NUMBER:	42663-KHB208
PIN LENGTH: L	1.430 / 36.32
MATING LENGTH: M	.867 / 22.02
GOLD POINT: G	.200 / 5.08
PC TAIL LENGTH: P	.473 / 12.01
TIN: T	.200 / 5.08
CKTS:	2-36
KINKS:	NO
VOIDED CKTS:	NONE
PACKAGING:	BULK PK-40873-0043

CKTS	ITEM NUMBER	CKTS	ITEM NUMBER
02	42375-3044	20	42375-3062
03	42375-3045	21	42375-3063
04	42375-3046	22	42375-3064
05	42375-3047	23	42375-3065
06	42375-3048	24	42375-3066
07	42375-3049	25	42375-3067
08	42375-3050	26	42375-3068
09	42375-3051	27	42375-3069
10	42375-3052	28	42375-3070
11	42375-3053	29	42375-3071
12	42375-3054	30	42375-3072
13	42375-3055	31	42375-3073
14	42375-3056	32	42375-3074
15	42375-3057	33	42375-3075
16	42375-3058	34	42375-3076
17	42375-3059	35	42375-3077
18	42375-3060	36	42375-3078
19	42375-3061		

ENG. NO: 42375-3114/3148	
HEADER NUMBER:	42312-0036
PIN NUMBER:	42663-BXA154
PIN LENGTH: L	.645 / 16.38
MATING LENGTH: M	.431 / 10.95
GOLD POINT: G	N/A
PC TAIL LENGTH: P	.124 / 3.15
TIN: T	OVERALL
CKTS:	2-36
KINKS:	NO
VOIDED CKTS:	NONE
PACKAGING:	BULK PK-40873-0041

CKTS	ITEM NUMBER	CKTS	ITEM NUMBER
02	42375-3114	20	42375-3132
03	42375-3115	21	42375-3133
04	42375-3116	22	42375-3134
05	42375-3117	23	42375-3135
06	42375-3118	24	42375-3136
07	42375-3119	25	42375-3137
08	42375-3120	26	42375-3138
09	42375-3121	27	42375-3139
10	42375-3122	28	42375-3140
11	42375-3123	29	42375-3141
12	42375-3124	30	42375-3142
13	42375-3125	31	42375-3143
14	42375-3126	32	42375-3144
15	42375-3127	33	42375-3145
16	42375-3128	34	42375-3146
17	42375-3129	35	42375-3147
18	42375-3130	36	42375-3148
19	42375-3131		

REV:	ECR/ECN INFORMATION:	TITLE:	SHEET No.
U	EC No.: **UCP2017-2793** DATE: **12/20/2021**	**KK 100 HEADER ASSY FLAT VERTICAL BREAKAWAY**	**- 20 -**

DOCUMENT NUMBER:	CREATED / REVISED BY:	CHECKED BY:	APPROVED BY:
SD- 42375-001	**SS06**	**ISHWARG**	**ISHWARG**

ENG. NO: 42375-3149 / 3183	
HEADER NUMBER:	42312-0036
PIN NUMBER:	42663-BEB208
PIN LENGTH: L	.575 / 14.61
MATING LENGTH: M	.350 / 8.89
GOLD POINT: G	.200 / 5.08
PC TAIL LENGTH: P	.135 / 3.43
TIN: T	.200 / 5.08
CKTS:	2-36
KINKS:	NO
VOIDED CKTS:	NONE
PACKAGING:	BULK PK-40873-0041

CKTS	ITEM NUMBER	CKTS	ITEM NUMBER
02	42375-3149	20	42375-3167
03	42375-3150	21	42375-3168
04	42375-3151	22	42375-3169
05	42375-3152	23	42375-3170
06	42375-3153	24	42375-3171
07	42375-3154	25	42375-3172
08	42375-3155	26	42375-3173
09	42375-3156	27	42375-3174
10	42375-3157	28	42375-3175
11	42375-3158	29	42375-3176
12	42375-3159	30	42375-3177
13	42375-3160	31	42375-3178
14	42375-3161	32	42375-3179
15	42375-3162	33	42375-3180
16	42375-3163	34	42375-3181
17	42375-3164	35	42375-3182
18	42375-3165	36	42375-3183
19	42375-3166		

ENG. NO: 42375-3184 / 3218	
HEADER NUMBER:	42312-0036
PIN NUMBER:	42663-GNB208
PIN LENGTH: L	1.140 / 28.96
MATING LENGTH: M	.913 / 23.20
GOLD POINT: G	.200 / 5.08
PC TAIL LENGTH: P	.137 / 3.48
TIN: T	.200 / 5.08
CKTS:	2-36
KINKS:	NO
VOIDED CKTS:	NONE
PACKAGING:	BULK PK-40873-0043

CKTS	ITEM NUMBER	CKTS	ITEM NUMBER
02	42375-3184	20	42375-3202
03	42375-3185	21	42375-3203
04	42375-3186	22	42375-3204
05	42375-3187	23	42375-3205
06	42375-3188	24	42375-3206
07	42375-3189	25	42375-3207
08	42375-3190	26	42375-3208
09	42375-3191	27	42375-3209
10	42375-3192	28	42375-3210
11	42375-3193	29	42375-3211
12	42375-3194	30	42375-3212
13	42375-3195	31	42375-3213
14	42375-3196	32	42375-3214
15	42375-3197	33	42375-3215
16	42375-3198	34	42375-3216
17	42375-3199	35	42375-3217
18	42375-3200	36	42375-3218
19	42375-3201		

ENG. NO: 42375-3219 / 3253	
HEADER NUMBER:	42312-0036
PIN NUMBER:	42663-BPA154
PIN LENGTH: L	.620 / 15.75
MATING LENGTH: M	.280 / 7.11
GOLD POINT: G	NA
PC TAIL LENGTH: P	.250 / 6.35
TIN: T	OVERALL
CKTS:	2-36
KINKS:	NO
VOIDED CKTS:	NONE
PACKAGING:	BULK PK-40873-0041

CKTS	ITEM NUMBER	CKTS	ITEM NUMBER
02	42375-3219	20	42375-3237
03	42375-3220	21	42375-3238
04	42375-3221	22	42375-3239
05	42375-3222	23	42375-3240
06	42375-3223	24	42375-3241
07	42375-3224	25	42375-3242
08	42375-3225	26	42375-3243
09	42375-3226	27	42375-3244
10	42375-3227	28	42375-3245
11	42375-3228	29	42375-3246
12	42375-3229	30	42375-3247
13	42375-3230	31	42375-3248
14	42375-3231	32	42375-3249
15	42375-3232	33	42375-3250
16	42375-3233	34	42375-3251
17	42375-3234	35	42375-3252
18	42375-3235	36	42375-3253
19	42375-3236		

REV:	ECR/ECN INFORMATION:	TITLE:	SHEET No.
U	EC No.: **UCP2017-2793** DATE: **12/20/2021**	**KK 100 HEADER ASSY FLAT VERTICAL BREAKAWAY**	**- 21 -**

DOCUMENT NUMBER:	CREATED / REVISED BY:	CHECKED BY:	APPROVED BY:
SD- 42375-001	**SS06**	**ISHWARG**	**ISHWARG**

ENG. NO: 42375-3254 / 3288	
HEADER NUMBER:	42312-0036
PIN NUMBER:	42663-DMA154
PIN LENGTH: L	.820 / 20.83
MATING LENGTH: M	.590 / 14.99
GOLD POINT: G	NA
PC TAIL LENGTH: P	.140 / 3.56
TIN: T	OVERALL
CKTS:	2-36
KINKS:	NO
VOIDED CKTS:	NONE
PACKAGING:	BULK PK-40873-0041

CKTS	ITEM NUMBER	CKTS	ITEM NUMBER
02	42375-3254	20	42375-3272
03	42375-3255	21	42375-3273
04	42375-3256	22	42375-3274
05	42375-3257	23	42375-3275
06	42375-3258	24	42375-3276
07	42375-3259	25	42375-3277
08	42375-3260	26	42375-3278
09	42375-3261	27	42375-3279
10	42375-3262	28	42375-3280
11	42375-3263	29	42375-3281
12	42375-3264	30	42375-3282
13	42375-3265	31	42375-3283
14	42375-3266	32	42375-3284
15	42375-3267	33	42375-3285
16	42375-3268	34	42375-3286
17	42375-3269	35	42375-3287
18	42375-3270	36	42375-3288
19	42375-3271		

ENG. NO: 42375-3289 / 3323	
HEADER NUMBER:	42312-0036
PIN NUMBER:	42663-FNA154
PIN LENGTH: L	1.035 / 26.29
MATING LENGTH: M	.358 / 9.09
GOLD POINT: G	NA
PC TAIL LENGTH: P	.587 / 14.91
TIN: T	OVERALL
CKTS:	2-36
KINKS:	NO
VOIDED CKTS:	NONE
PACKAGING:	BULK PK-40873-0043

CKTS	ITEM NUMBER	CKTS	ITEM NUMBER
02	42375-3289	20	42375-3307
03	42375-3290	21	42375-3308
04	42375-3291	22	42375-3309
05	42375-3292	23	42375-3310
06	42375-3293	24	42375-3311
07	42375-3294	25	42375-3312
08	42375-3295	26	42375-3313
09	42375-3296	27	42375-3314
10	42375-3297	28	42375-3315
11	42375-3298	29	42375-3316
12	42375-3299	30	42375-3317
13	42375-3300	31	42375-3318
14	42375-3301	32	42375-3319
15	42375-3302	33	42375-3320
16	42375-3303	34	42375-3321
17	42375-3304	35	42375-3322
18	42375-3305	36	42375-3323
19	42375-3306		

ENG. NO: 42375-3324 / 3358	
HEADER NUMBER:	42312-0036
PIN NUMBER:	42663-CCA154
PIN LENGTH: L	.670 / 17.02
MATING LENGTH: M	.440 / 11.18
GOLD POINT: G	NA
PC TAIL LENGTH: P	.140 / 3.56
TIN: T	OVERALL
CKTS:	2-36
KINKS:	SMES-42003
VOIDED CKTS:	NONE
PACKAGING:	BULK PK-40873-0041

CKTS	ITEM NUMBER	CKTS	ITEM NUMBER
02	42375-3324	20	42375-3342
03	42375-3325	21	42375-3343
04	42375-3326	22	42375-3344
05	42375-3327	23	42375-3345
06	42375-3328	24	42375-3346
07	42375-3329	25	42375-3347
08	42375-3330	26	42375-3348
09	42375-3331	27	42375-3349
10	42375-3332	28	42375-3350
11	42375-3333	29	42375-3351
12	42375-3334	30	42375-3352
13	42375-3335	31	42375-3353
14	42375-3336	32	42375-3354
15	42375-3337	33	42375-3355
16	42375-3338	34	42375-3356
17	42375-3339	35	42375-3357
18	42375-3340	36	42375-3358
19	42375-3341		

REV:	ECR/ECN INFORMATION:	TITLE:	SHEET No.
U	EC No.: **UCP2017-2793** DATE: **12/20/2021**	**KK 100 HEADER ASSY FLAT VERTICAL BREAKAWAY**	**- 22 -**

DOCUMENT NUMBER:	CREATED / REVISED BY:	CHECKED BY:	APPROVED BY:
SD- 42375-001	**SS06**	**ISHWARG**	**ISHWARG**

ENG. NO: 42375-3359 / 3393	
HEADER NUMBER:	42312-0036
PIN NUMBER:	42663-ABB228
PIN LENGTH: L	.455 / 11.56
MATING LENGTH: M	.170 / 4.32
GOLD POINT: G	.100 / 2.54
PC TAIL LENGTH: P	.195 / 4.95
TIN: T	.100 / 2.54
CKTS:	2-36
KINKS:	NO
VOIDED CKTS:	NONE
PACKAGING:	BULK PK-40873-0041

CKTS	ITEM NUMBER	CKTS	ITEM NUMBER
02	42375-3359	20	42375-3377
03	42375-3360	21	42375-3378
04	42375-3361	22	42375-3379
05	42375-3362	23	42375-3380
06	42375-3363	24	42375-3381
07	42375-3364	25	42375-3382
08	42375-3365	26	42375-3383
09	42375-3366	27	42375-3384
10	42375-3367	28	42375-3385
11	42375-3368	29	42375-3386
12	42375-3369	30	42375-3387
13	42375-3370	31	42375-3388
14	42375-3371	32	42375-3389
15	42375-3372	33	42375-3390
16	42375-3373	34	42375-3391
17	42375-3374	35	42375-3392
18	42375-3375	36	42375-3393
19	42375-3376		

ENG. NO: 42375-3394 / 3428	
HEADER NUMBER:	42312-0036
PIN NUMBER:	42663-EZB208
PIN LENGTH: L	.970/24.64
MATING LENGTH: M	.780/19.81
GOLD POINT: G	.200/5.08
PC TAIL LENGTH: P	.100/ 2.54
TIN: T	.200/5.08
CKTS:	2-36
KINKS:	NO
VOIDED CKTS:	NONE
PACKAGING:	BULK PK-40873-0043

CKTS	ITEM NUMBER	CKTS	ITEM NUMBER
02	42375-3394	20	42375-3412
03	42375-3395	21	42375-3413
04	42375-3396	22	42375-3414
05	42375-3397	23	42375-3415
06	42375-3398	24	42375-3416
07	42375-3399	25	42375-3417
08	42375-3400	26	42375-3418
09	42375-3401	27	42375-3419
10	42375-3402	28	42375-3420
11	42375-3403	29	42375-3421
12	42375-3404	30	42375-3422
13	42375-3405	31	42375-3423
14	42375-3406	32	42375-3424
15	42375-3407	33	42375-3425
16	42375-3408	34	42374-3426
17	42375-3409	35	42375-3427
18	42375-3410	36	42375-3428
19	42375-3411		

ENG. NO: 42375-3429 / 3463	
HEADER NUMBER:	42312-0036
PIN NUMBER:	42663-ARA154
PIN LENGTH: L	.520/13.21
MATING LENGTH: M	.386/9.80
GOLD POINT: G	N/A
PC TAIL LENGTH: P	.044/1.12
TIN: T	OVERALL
CKTS:	2-36
KINKS:	NO
VOIDED CKTS:	NONE
PACKAGING:	BULK PK-40873-0041

CKTS	ITEM NUMBER	CKTS	ITEM NUMBER
02	42375-3429	20	42375-3447
03	42375-3430	21	42375-3448
04	42375-3431	22	42375-3449
05	42375-3432	23	42375-3450
06	42375-3433	24	42375-3451
07	42375-3434	25	42375-3452
08	42375-3435	26	42375-3453
09	42375-3436	27	42375-3454
10	42375-3437	28	42375-3455
11	42375-3438	29	42375-3456
12	42375-3439	30	42375-3457
13	42375-3440	31	42375-3458
14	42375-3441	32	42375-3459
15	42375-3442	33	42375-3460
16	42375-3443	34	42374-3461
17	42375-3444	35	42375-3462
18	42375-3445	36	42375-3463
19	42375-3446		

REV:	ECR/ECN INFORMATION:	TITLE:	SHEET No.
U	EC No.: **UCP2017-2793** DATE: **12/20/2021**	**KK 100 HEADER ASSY FLAT VERTICAL BREAKAWAY**	**- 23 -**

DOCUMENT NUMBER:	CREATED / REVISED BY:	CHECKED BY:	APPROVED BY:
SD- 42375-001	**SS06**	**ISHWARG**	**ISHWARG**

ENG. NO: 42375-3464 / 3498			
HEADER NUMBER:	42312-0036		
PIN NUMBER:	42663-CJA154		
PIN LENGTH: L	.700/17.78		
MATING LENGTH: M	.500/12.70		
GOLD POINT: G	N/A		
PC TAIL LENGTH: P	.110/2.79		
TIN: T	OVERALL		
CKTS:	2-36		
KINKS:	NO		
VOIDED CKTS:	# 2		
PACKAGING:	BULK PK-40873-0041		
CKTS	ITEM NUMBER	CKTS	ITEM NUMBER
02	42375-3464	20	42375-3482
03	42375-3465	21	42375-3483
04	42375-3466	22	42375-3484
05	42375-3467	23	42375-3485
06	42375-3468	24	42375-3486
07	42375-3469	25	42375-3487
08	42375-3470	26	42375-3488
09	42375-3471	27	42375-3489
10	42375-3472	28	42375-3490
11	42375-3473	29	42375-3491
12	42375-3474	30	42375-3492
13	42375-3475	31	42375-3493
14	42375-3476	32	42375-3494
15	42375-3477	33	42375-3495
16	42375-3478	34	42375-3496
17	42375-3479	35	42375-3497
18	42375-3480	36	42375-3498
19	42375-3481		

ENG. NO: 42375-3499/3533			
HEADER NUMBER:	42312-0036		
PIN NUMBER:	42663-ETA154		
PIN LENGTH: L	.950/24.13		
MATING LENGTH: M	.750/19.05		
GOLD POINT: G	N/A		
PC TAIL LENGTH: P	.110/2.79		
TIN: T	OVERALL		
CKTS:	2-36		
KINKS:	NO		
VOIDED CKTS:	NONE		
PACKAGING:	BULK PK-40873-0043		
CKTS	ITEM NUMBER	CKTS	ITEM NUMBER
02	42375-3499	20	42375-3517
03	42375-3500	21	42375-3518
04	42375-3501	22	42375-3519
05	42375-3502	23	42375-3520
06	42375-3503	24	42375-3521
07	42375-3504	25	42375-3522
08	42375-3505	26	42375-3523
09	42375-3506	27	42375-3524
10	42375-3507	28	42375-3525
11	42375-3508	29	42375-3526
12	42375-3509	30	42375-3527
13	42375-3510	31	42375-3528
14	42375-3511	32	42375-3529
15	42375-3512	33	42375-3530
16	42375-3513	34	42375-3531
17	42375-3514	35	42375-3532
18	42375-3515	36	42375-3533
19	42375-3516		

ENG. NO: 42375-3534/3568			
HEADER NUMBER:	42312-0036		
PIN NUMBER:	42663-AWB208		
PIN LENGTH: L	.535/13.59		
MATING LENGTH: M	.235/5.97		
GOLD POINT: G	.200/5.08		
PC TAIL LENGTH: P	.210/5.33		
TIN: T	.100/2.54		
CKTS:	2-36		
KINKS:	NO		
VOIDED CKTS:	NONE		
PACKAGING:	BULK PK-40873-0041		
CKTS	ITEM NUMBER	CKTS	ITEM NUMBER
02	42375-3534	20	42375-3552
03	42375-3535	21	42375-3553
04	42375-3536	22	42375-3554
05	42375-3537	23	42375-3555
06	42375-3538	24	42375-3556
07	42375-3539	25	42375-3557
08	42375-3540	26	42375-3558
09	42375-3541	27	42375-3559
10	42375-3542	28	42375-3560
11	42375-3543	29	42375-3561
12	42375-3544	30	42375-3562
13	42375-3545	31	42375-3563
14	42375-3546	32	42375-3564
15	42375-3547	33	42375-3565
16	42375-3548	34	42375-3566
17	42375-3549	35	42375-3567
18	42375-3550	36	42375-3568
19	42375-3551		

REV:	ECR/ECN INFORMATION:	TITLE:	SHEET No.
U	EC No.: **UCP2017-2793** DATE: **12/20/2021**	**KK 100 HEADER ASSY FLAT VERTICAL BREAKAWAY**	**- 24 -**

DOCUMENT NUMBER:	CREATED / REVISED BY:	CHECKED BY:	APPROVED BY:
SD- 42375-001	**SS06**	**ISHWARG**	**ISHWARG**

ENG. NO: A-42375-3569/3603	
HEADER NUMBER:	42312-0036
PIN NUMBER:	42663-ABB208
PIN LENGTH: L	.455 / 11.56
MATING LENGTH: M	.240 / 6.09
GOLD POINT: G	.100 / 2.54
PC TAIL LENGTH: P	.125 / 3.18
TIN: T	.100 / 2.54
CKTS:	4-36
KINKS:	NO
VOIDED CKTS:	5
PACKAGING:	BULK PK-40873-0041

CKTS	MATERIAL NUMBER	ENG NUMBER	CKTS	MATERIAL NUMBER	ENG NUMBER
02			20	423753587	42375-3587
03			21	423753588	42375-3588
04			22	423753589	42375-3589
05	423753572	42375-3572	23	423753590	42375-3590
06	423753573	42375-3573	24	423753591	42375-3591
07	423753574	42375-3574	25	423753592	42375-3592
08	423753575	42375-3575	26	423753593	42375-3593
09	423753576	42375-3576	27	423753594	42375-3594
10	423753577	42375-3577	28	423753595	42375-3595
11	423753578	42375-3578	29	423753596	42375-3596
12	423753579	42375-3579	30	423753597	42375-3597
13	423753580	42375-3580	31	423753598	42375-3598
14	423753581	42375-3581	32	423753599	42375-3599
15	423753582	42375-3582	33	423753600	42375-3600
16	423753583	42375-3583	34	423753601	42375-3601
17	423753584	42375-3584	35	423753602	42375-3602
18	423753585	42375-3585	36	423753603	42375-3603
19	423753586	42375-3586			

ENG. NO: A-42375-2974/3008	
HEADER NUMBER:	42312-0036
PIN NUMBER:	42663-FKB228
PIN LENGTH: L	1.020 / 25.91
MATING LENGTH: M	.805 / 20.45
GOLD POINT: G	.200 / 5.08
PC TAIL LENGTH: P	.125 / 3.18
TIN: T	.200 / 5.08
CKTS:	2-36
KINKS:	NO
VOIDED CKTS:	NONE
PACKAGING:	BULK PK-40873-0043

CKTS	MATERIAL NUMBER	ENG NUMBER	CKTS	MATERIAL NUMBER	ITEM NUMBER
02			20		
03			21		
04			22		
05	423752977	42375-2977	23		
06			24		
07			25		
08			26		
09			27		
10			28		
11			29		
12			30		
13			31		
14			32		
15			33		
16			34		
17			35		
18			36		
19					

REV:	ECR/ECN INFORMATION:	TITLE:	SHEET No.
U	EC No.: **UCP2017-2793** DATE: **12/20/2021**	**KK 100 HEADER ASSY FLAT VERTICAL BREAKAWAY**	**- 25 -**

DOCUMENT NUMBER:	CREATED / REVISED BY:	CHECKED BY:	APPROVED BY:
SD- 42375-001	**SS06**	**ISHWARG**	**ISHWARG**

ENG. NO: A-42375-3604/3637	
HEADER NUMBER:	42312-0036
PIN NUMBER:	42663-AXA154
PIN LENGTH: L	.540 / 13.72
MATING LENGTH: M	.380 / 9.65
GOLD POINT: G	N/A
PC TAIL LENGTH: P	.070 / 1.78
TIN: T	OVERALL
CKTS:	3-36
KINKS:	NO
VOIDED CKTS:	2
PACKAGING:	BULK PK-40873-0041

CKTS	MATERIAL NUMBER	ENG NUMBER	CKTS	MATERIAL NUMBER	ENG NUMBER
02			20		
03	42375-3604		21		
04			22		
05			23		
06			24		
07			25		
08			26		
09			27		
10			28		
11			29		
12			30		
13			31		
14			32		
15			33		
16			34		
17			35		
18			36		
19					

ENG. NO: A-42375-3638/3658	
HEADER NUMBER:	42312-0036
PIN NUMBER:	42663-ABA154
PIN LENGTH: L	.455 / 11.56
MATING LENGTH: M	.240 / 6.09
GOLD POINT: G	N/A
PC TAIL LENGTH: P	.125 / 3.18
TIN: T	OVERALL
CKTS:	2-36
KINKS:	NO
VOIDED CKTS:	2, 4, 6, 8, 10, 12, 14, 16
PACKAGING:	BULK PK-40873-0041

CKTS	MATERIAL NUMBER	ENG NUMBER	CKTS	MATERIAL NUMBER	ITEM NUMBER
02			20		
03			21		
04			22		
05			23		
06			24		
07			25		
08			26		
09			27		
10			28		
11			29		
12			30		
13			31		
14			32		
15			33		
16			34		
17	423753639	42375-3639	35		
18			36		
19					

REV:	ECR/ECN INFORMATION:	TITLE:	SHEET No.
U	EC No.: **UCP2017-2793** DATE: **12/20/2021**	**KK 100 HEADER ASSY FLAT VERTICAL BREAKAWAY**	**- 26 -**

DOCUMENT NUMBER:	CREATED / REVISED BY:	CHECKED BY:	APPROVED BY:
SD- 42375-001	**SS06**	**ISHWARG**	**ISHWARG**

ENG. NO: 42375-3659/3693	
HEADER NUMBER:	42312-0036
PIN NUMBER:	42663-AXB208
PIN LENGTH: L	.540 /13.72
MATING LENGTH: M	.250 / 6.35
GOLD POINT: G	.140 / 3.56
PC TAIL LENGTH: P	.200 / 5.08
TIN: T	.135 / 3.43
CKTS:	2-36
KINKS:	NO
VOIDED CKTS:	NONE
PACKAGING:	BULK PK-40873-0041

CKTS	MATERIAL NUMBER	ENG NUMBER	CKTS	MATERIAL NUMBER	ENG NUMBER
02	68300-2000	42375-3659	20		42375-3677
03	68300-2001	42375-3660	21		42375-3678
04		42375-3661	22		42375-3679
05	68300-2006	42375-3662	23		42375-3680
06		42375-3663	24		42375-3681
07		42375-3664	25		42375-3682
08		42375-3665	26		42375-3683
09		42375-3666	27		42375-3684
10		42375-3667	28		42375-3685
11		42375-3668	29		42375-3686
12		42375-3669	30		42375-3687
13		42375-3670	31		42375-3688
14		42375-3671	32		42375-3689
15		42375-3672	33		42375-3690
16		42375-3673	34		42375-3691
17		42375-3674	35		42375-3692
18		42375-3675	36		42375-3693
19		42375-3676			

ENG. NO: 42375-3694/3728	
HEADER NUMBER:	42312-0036
PIN NUMBER:	42663-AXB208
PIN LENGTH: L	.540 / 13.72
MATING LENGTH: M	.250 / 6.35
GOLD POINT: G	.140 / 3.56
PC TAIL LENGTH: P	.200 / 5.08
TIN: T	.135 / 3.43
CKTS:	2-36
KINKS:	NO
VOIDED CKTS:	5
PACKAGING:	BULK PK-40873-0041

CKTS	MATERIAL NUMBER	ENG NUMBER	CKTS	MATERIAL NUMBER	ENG NUMBER
02		42375-3694	20		42375-3712
03		42375-3695	21		42375-3713
04		42375-3696	22		42375-3714
05		42375-3697	23		42375-3715
06		42375-3698	24		42375-3716
07		42375-3699	25		42375-3717
08	68300-2002	42375-3700	26		42375-3718
09		42375-3701	27		42375-3719
10		42375-3702	28		42375-3720
11		42375-3703	29		42375-3721
12		42375-3704	30		42375-3722
13		42375-3705	31		42375-3723
14		42375-3706	32		42375-3724
15		42375-3707	33		42375-3725
16		42375-3708	34		42375-3726
17		42375-3709	35		42375-3727
18		42375-3710	36		42375-3728
19		42375-3711			

REV:	ECR/ECN INFORMATION:	TITLE:	SHEET No.
U	EC No.: **UCP2017-2793** DATE: **12/20/2021**	**KK 100 HEADER ASSY FLAT VERTICAL BREAKAWAY**	**- 27 -**

DOCUMENT NUMBER:	CREATED / REVISED BY:	CHECKED BY:	APPROVED BY:
SD- 42375-001	**SS06**	**ISHWARG**	**ISHWARG**

ENG. NO: 42375-3729/3763	
HEADER NUMBER:	42312-0036
PIN NUMBER:	42663-AFB208
PIN LENGTH: L	.475 / 12.07
MATING LENGTH: M	.232 / 5.89
GOLD POINT: G	.150 / 3.81
PC TAIL LENGTH: P	.153 / 3.89
TIN: T	.150 / 3.81
CKTS:	2-36
KINKS:	NO
VOIDED CKTS:	5
PACKAGING:	BULK PK-40873-0041

CKTS	MATERIAL NUMBER	ENG NUMBER	CKTS	MATERIAL NUMBER	ENG NUMBER
02		42375-3729	20		42375-3747
03		42375-3730	21		42375-3748
04		42375-3731	22		42375-3749
05		42375-3732	23		42375-3750
06		42375-3733	24		42375-3751
07		42375-3734	25		42375-3752
08	68300-2007	42375-3735	26		42375-3753
09		42375-3736	27		42375-3754
10		42375-3737	28		42375-3755
11		42375-3738	29		42375-3756
12		42375-3739	30		42375-3757
13		42375-3740	31		42375-3758
14		42375-3741	32		42375-3759
15		42375-3742	33		42375-3760
16		42375-3743	34		42375-3761
17		42375-3744	35		42375-3762
18		42375-3745	36		42375-3763
19		42375-3746			

ENG. NO: 42375-3764/3798	
HEADER NUMBER:	42312-0036
PIN NUMBER:	42663-ETA154
PIN LENGTH: L	.950/24.13
MATING LENGTH: M	.750/19.05
GOLD POINT: G	N/A
PC TAIL LENGTH: P	.110/2.79
TIN: T	OVERALL
CKTS:	2-36
KINKS:	NO
VOIDED CKTS:	2
PACKAGING:	BULK PK-40873-0043

CKTS	ITEM NUMBER	CKTS	ITEM NUMBER
02		20	
03		21	
04		22	
05		23	
06		24	
07		25	
08	42375-3770	26	
09		27	
10		28	
11		29	
12		30	
13		31	
14		32	
15		33	
16		34	
17		35	
18		36	
19			

REV:	ECR/ECN INFORMATION:	TITLE:	SHEET No.
U	EC No.: **UCP2017-2793** DATE: **12/20/2021**	**KK 100 HEADER ASSY FLAT VERTICAL BREAKAWAY**	**- 28 -**

DOCUMENT NUMBER:	CREATED / REVISED BY:	CHECKED BY:	APPROVED BY:
SD- 42375-001	**SS06**	**ISHWARG**	**ISHWARG**

ENG. NO: 42375-3799/3832			
HEADER NUMBER:	42312-0036		
PIN NUMBER:	42663-ABA154		
PIN LENGTH: L	.455 / 11.56		
MATING LENGTH: M	.240 / 6.09		
GOLD POINT: G	N/A		
PC TAIL LENGTH: P	.125 / 3.18		
TIN: T	OVERALL		
CKTS:	3-36		
KINKS:	NO		
VOIDED CKTS:	3		
PACKAGING:	BULK PK-40873-0041		
CKTS	MATERIAL NUMBER	CKTS	MATERIAL NUMBER
02		20	
03		21	
04		22	
05	42375-3801	23	
06		24	
07		25	
08		26	
09		27	
10		28	
11		29	
12		30	
13		31	
14		32	
15		33	
16		34	
17		35	
18		36	
19			

ENG. NO: 42375-3733/3867			
HEADER NUMBER:	42312-0036		
PIN NUMBER:	42663-ABB208		
PIN LENGTH: L	.455 / 11.56		
MATING LENGTH: M	.250 / 6.35		
GOLD POINT: G	.100 / 2.54		
PC TAIL LENGTH: P	.115 / 2.92		
TIN: T	.100 / 2.54		
CKTS:	2-36		
KINKS:	NO		
VOIDED CKTS:	NONE		
PACKAGING:	BULK PK-40873-0041		
CKTS	MATERIAL NUMBER	CKTS	MATERIAL NUMBER
02		20	
03		21	
04		22	
05	42375-3836	23	
06		24	
07		25	
08		26	
09		27	
10		28	
11		29	
12		30	
13		31	
14		32	
15		33	
16		34	
17		35	
18		36	
19			

ENG. NO: 42375-3868 / 3902			
HEADER NUMBER:	42312-0036		
PIN NUMBER:	42663-DWA154		
PIN LENGTH: L	.850 / 21.59		
MATING LENGTH: M	.640 / 16.26		
GOLD POINT: G	N/A		
PC TAIL LENGTH: P	.120 / 3.05		
TIN: T	OVERALL		
CKTS:	2-36		
KINKS:	NO		
VOIDED CKTS:	NONE		
PACKAGING:	BULK PK-40873-0041		
CKTS	ITEM NUMBER	CKTS	ITEM NUMBER
02		20	
03		21	
04	42375-3870	22	
05		23	
06	42375-3872	24	
07		25	
08		26	
09		27	
10		28	
11		29	
12		30	
13		31	
14		32	
15		33	
16		34	
17		35	
18		36	
19			

REV:	ECR/ECN INFORMATION:	TITLE:	SHEET No.
U	EC No.: **UCP2017-2793** DATE: **12/20/2021**	**KK 100 HEADER ASSY FLAT VERTICAL BREAKAWAY**	**- 29 -**

DOCUMENT NUMBER:	CREATED / REVISED BY:	CHECKED BY:	APPROVED BY:
SD- 42375-001	**SS06**	**ISHWARG**	**ISHWARG**

ENG. NO: 42375-3903/3932			
HEADER NUMBER:	42312-0036		
PIN NUMBER:	42663-BSA154		
PIN LENGTH: L	.630 / 16.00		
MATING LENGTH: M	.421 / 10.69		
GOLD POINT: G	N/A		
PC TAIL LENGTH: P	.119 / 3.02		
TIN: T	OVERALL		
CKTS:	7-36		
KINKS:	NO		
VOIDED CKTS:	7		
PACKAGING:	BULK PK-40873-0041		
CKTS	MATERIAL NUMBER	CKTS	MATERIAL NUMBER
02		20	
03		21	
04		22	
05		23	
06		24	
07		25	
08	42375-3904	26	
09		27	
10		28	
11		29	
12		30	
13		31	
14		32	
15		33	
16		34	
17		35	
18		36	
19			

ENG. NO: 42375-3933/3964			
HEADER NUMBER:	42312-0036		
PIN NUMBER:	42663-BSA154		
PIN LENGTH: L	.630 / 16.00		
MATING LENGTH: M	.405/10.29		
GOLD POINT: G	N/A		
PC TAIL LENGTH: P	.135/3.43		
TIN: T	OVERALL		
CKTS:	5-36		
KINKS:	SMES-42003		
VOIDED CKTS:	5		
PACKAGING:	BULK PK-40873-0041		
CKTS	MATERIAL NUMBER	CKTS	MATERIAL NUMBER
02		20	
03		21	
04		22	
05		23	
06		24	
07		25	
08		26	
09	42375-3937	27	
10		28	
11		29	
12		30	
13		31	
14		32	
15		33	
16		34	
17		35	
18		36	
19			

ENG. NO: 42375-3965/3995			
HEADER NUMBER:	42312-0036		
PIN NUMBER:	42663-BSA154		
PIN LENGTH: L	.630 / 16.00		
MATING LENGTH: M	.405/10.29		
GOLD POINT: G	N/A		
PC TAIL LENGTH: P	.135/3.43		
TIN: T	OVERALL		
CKTS:	6-36		
KINKS:	SMES-42003		
VOIDED CKTS:	4, 5, 6		
PACKAGING:	BULK PK-40873-0041		
CKTS	MATERIAL NUMBER	CKTS	MATERIAL NUMBER
02		20	
03		21	
04		22	
05		23	
06		24	
07		25	
08		26	
09	42375-3968	27	
10		28	
11		29	
12		30	
13		31	
14		32	
15		33	
16		34	
17		35	
18		36	
19			

REV:	ECR/ECN INFORMATION:	TITLE:	SHEET No.
U	EC No.: **UCP2017-2793** DATE: **12/20/2021**	**KK 100 HEADER ASSY FLAT VERTICAL BREAKAWAY**	**- 30 -**

DOCUMENT NUMBER:	CREATED / REVISED BY:	CHECKED BY:	APPROVED BY:
SD- 42375-001	**SS06**	**ISHWARG**	**ISHWARG**

ENG. NO: A-42375-3996/4030			
HEADER NUMBER:		42312-0036	
PIN NUMBER:		42663-AXA154	
PIN LENGTH: L		.540 / 13.72	
MATING LENGTH: M		.390 / 9.91	
GOLD POINT: G		N/A	
PC TAIL LENGTH: P		.060 / 1.52	
TIN: T		OVERALL	
CKTS:		2-36	
KINKS:		NO	
VOIDED CKTS:		NONE	
PACKAGING:		BULK	PK-40873-0041
CKTS	ITEM NUMBER	CKTS	ITEM NUMBER
02		20	
03		21	
04		22	
05		23	
06	42375-4000	24	
07	42375-4001	25	
08		26	
09		27	
10		28	
11		29	
12		30	
13		31	
14		32	
15		33	
16		34	
17		35	
18		36	
19			

ENG. NO: 42375-4031/4059			
HEADER NUMBER:		42312-0036	
PIN NUMBER:		42663-ABA154	
PIN LENGTH: L		.455 / 11.56	
MATING LENGTH: M		.240 / 6.09	
GOLD POINT: G		N/A	
PC TAIL LENGTH: P		.125 / 3.18	
TIN: T		OVERALL	
CKTS:		8-36	
KINKS:		NO	
VOIDED CKTS:		2, 4, 6, 8	
PACKAGING:		BULK	PK-40873-0041
CKTS	MATERIAL NUMBER	CKTS	MATERIAL NUMBER
02		20	
03		21	
04		22	
05		23	
06		24	
07		25	
08		26	
09	42375-4032	27	
10		28	
11		29	
12		30	
13		31	
14		32	
15		33	
16		34	
17		35	
18		36	
19			

ENG. NO: 42375-4060 / 4094			
HEADER NUMBER:		42312-0036	
PIN NUMBER:		42663-CGA154	
PIN LENGTH: L		.690 / 17.53	
MATING LENGTH: M		.521 / 13.23	
GOLD POINT: G		N/A	
PC TAIL LENGTH: P		.079 / 2.01	
TIN: T		OVERALL	
CKTS:		2-36	
KINKS:		NO	
VOIDED CKTS:		NONE	
PACKAGING:		BULK	PK-40873-0041
CKTS	MATERIAL NUMBER	CKTS	MATERIAL NUMBER
02		20	
03		21	
04		22	
05		23	
06	42375-4064	24	
07		25	
08		26	
09		27	
10		28	
11		29	
12		30	
13		31	
14		32	
15		33	
16		34	
17		35	
18		36	
19			

REV:	ECR/ECN INFORMATION:	TITLE:	SHEET No.
U	EC No.: **UCP2017-2793** DATE: **12/20/2021**	**KK 100 HEADER ASSY FLAT VERTICAL BREAKAWAY**	**- 31 -**

DOCUMENT NUMBER:	CREATED / REVISED BY:	CHECKED BY:	APPROVED BY:
SD- 42375-001	**SS06**	**ISHWARG**	**ISHWARG**

ENG. NO: A-42375-4095/4129			
HEADER NUMBER:	42312-0036		
PIN NUMBER:	42663-DEB228		
PIN LENGTH: L	.785 / 19.94		
MATING LENGTH: M	.470 / 11.94		
GOLD POINT: G	.250 / 6.35		
PC TAIL LENGTH: P	.225 / 5.72		
TIN: T	.200 / 5.08		
CKTS:	2-36		
KINKS:	NO		
VOIDED CKTS:	NONE		
PACKAGING:	BULK PK-40873-0041		
CKTS	ITEM NUMBER	CKTS	ITEM NUMBER
02		20	
03		21	
04		22	
05		23	
06		24	
07		25	
08		26	
09		27	
10	42375-4103	28	
11		29	
12		30	
13		31	
14		32	
15		33	
16		34	
17		35	
18	42375-4111	36	
19			

ENG. NO: A-42375-4130/4161			
HEADER NUMBER:	42312-0036		
PIN NUMBER:	42663-ATA154		
PIN LENGTH: L	.530/13.46		
MATING LENGTH: M	.320/8.13		
GOLD POINT: G	N/A		
PC TAIL LENGTH: P	.120/3.05		
TIN: T	OVERALL		
CKTS:	5-36		
KINKS:	SMES-42003		
VOIDED CKTS:	2, 3, 4		
PACKAGING:	BULK PK-40873-0041		
CKTS	ITEM NUMBER	CKTS	ITEM NUMBER
		20	
		21	
		22	
05	42375-4130	23	
06		24	
07		25	
08		26	
09		27	
10		28	
11		29	
12		30	
13		31	
14		32	
15		33	
16		34	
17		35	
18		36	
19			

ENG. NO: 42375-4162/4196			
HEADER NUMBER:	42312-0036		
PIN NUMBER:	42663-BSC228		
PIN LENGTH: L	.630/16.00		
MATING LENGTH: M	.400/10.16		
GOLD POINT: G	.345/8.76		
PC TAIL LENGTH: P	.140/3.56		
TIN: T	.100/2.54		
CKTS:	2-36		
KINKS:	NO		
VOIDED CKTS:	NONE		
PACKAGING:	BULK PK-40873-0041		
CKTS	MATERIAL NUMBER	CKTS	MATERIAL NUMBER
02		20	
03		21	
04	42375-4164	22	
05	42375-4165	23	
06		24	
07		25	
08		26	
09		27	
10	42375-4170	28	
11		29	
12		30	
13		31	
14		32	
15		33	
16		34	
17		35	
18		36	
19			

REV:	ECR/ECN INFORMATION:	TITLE:	SHEET No.
U	EC No.: **UCP2017-2793** DATE: **12/20/2021**	**KK 100 HEADER ASSY FLAT VERTICAL BREAKAWAY**	**- 32 -**

DOCUMENT NUMBER:	CREATED / REVISED BY:	CHECKED BY:	APPROVED BY:
SD- 42375-001	**SS06**	**ISHWARG**	**ISHWARG**

ENG. NO: A-42375-1622			
HEADER NUMBER:	42312-0036		
PIN NUMBER:	42663-AYB208		
PIN LENGTH: L	.545 / 13.84		
MATING LENGTH: M	.320 / 8.13		
GOLD POINT: G	.140 / 3.56		
PC TAIL LENGTH: P	.135 / 3.43		
TIN: T	.135 / 3.43		
CKTS:	2-36		
KINKS:	SMES-42003		
VOIDED CKTS:	3		
PACKAGING:	BULK PK-40873-0041		
CKTS	MATERIAL NUMBER	CKTS	MATERIAL NUMBER
02		20	
03		21	
04		22	
05		23	
06		24	
07		25	
08		26	
09	42375-1622	27	
10		28	
11		29	
12		30	
13		31	
14		32	
15		33	
16		34	
17		35	
18		36	
19			

ENG. NO: A-42375-4199			
HEADER NUMBER:	42312-0036		
PIN NUMBER:	42663-ARB228		
PIN LENGTH: L	.520 / 13.21		
MATING LENGTH: M	.230 / 5.84		
GOLD POINT: G	.140 / 3.56		
PC TAIL LENGTH: P	.200 / 5.08		
TIN: T	.135 / 3.43		
CKTS:	2-36		
KINKS:	NO		
VOIDED CKTS:	NONE		
PACKAGING:	BULK PK-40873-0041		
CKTS	MATERIAL NUMBER	CKTS	MATERIAL NUMBER
02	42375-4199	20	
03		21	
04		22	
05		23	
06		24	
07		25	
08		26	
09		27	
10		28	
11		29	
12		30	
13		31	
14		32	
15		33	
16		34	
17		35	
18		36	
19			

ENG. NO: A-42375-4200			
HEADER NUMBER:	42312-0036		
PIN NUMBER:	42663-ADB208		
PIN LENGTH: L	.465 / 11.81		
MATING LENGTH: M	.240 / 6.09		
GOLD POINT: G	.100 / 2.54		
PC TAIL LENGTH: P	.135 / 3.43		
TIN: T	.100 / 2.54		
CKTS:	2-36		
KINKS:	SMES-42003		
VOIDED CKTS:	3, 4		
PACKAGING:	BULK PK-40873-0041		
CKTS	MATERIAL NUMBER	CKTS	MATERIAL NUMBER
02		20	
03		21	
04		22	
05	42375-4200	23	
06		24	
07		25	
08		26	
09		27	
10		28	
11		29	
12		30	
13		31	
14		32	
15		33	
16		34	
17		35	
18		36	
19			

REV:	ECR/ECN INFORMATION:	TITLE:	SHEET No.
U	EC No.: **UCP2017-2793** DATE: **12/20/2021**	**KK 100 HEADER ASSY FLAT VERTICAL BREAKAWAY**	**- 33 -**

DOCUMENT NUMBER:	CREATED / REVISED BY:	CHECKED BY:	APPROVED BY:
SD- 42375-001	**SS06**	**ISHWARG**	**ISHWARG**

ENG. NO: 42375-4236	
HEADER NUMBER:	42312-0036
PIN NUMBER:	42663-CCA118
PIN LENGTH: L	.670 / 17.02
MATING LENGTH: M	.440 / 11.18
GOLD POINT: G	NA
PC TAIL LENGTH: P	.140 / 3.56
TIN: T	OVERALL
CKTS:	2-36
KINKS:	SMES-42003
VOIDED CKTS:	NONE
PACKAGING:	BULK PK-40873-0041

CKTS	ITEM NUMBER	CKTS	ITEM NUMBER
02		20	
03		21	
04		22	
05		23	
06	42375-4236	24	
07		25	
08		26	
09		27	
10		28	
11		29	
12		30	
13		31	
14		32	
15		33	
16		34	
17		35	
18		36	
19			

ENG. NO: 42375-4305	
HEADER NUMBER:	42312-0036
PIN NUMBER:	42663-BDA154
PIN LENGTH: L	.570 / 14.48
MATING LENGTH: M	.339 / 8.61
GOLD POINT: G	N/A
PC TAIL LENGTH: P	.141 / 3.58
TIN: T	OVERALL
CKTS:	2-36
KINKS:	NO
VOIDED CKTS:	NONE
PACKAGING:	BULK PK-40873-0041

CKTS	MATERIAL NUMBER	CKTS	MATERIAL NUMBER
02		20	
03		21	
04		22	
05	42375-4305	23	
06		24	
07		25	
08		26	
09		27	
10		28	
11		29	
12		30	
13		31	
14		32	
15		33	
16		34	
17		35	
18		36	
19			

ENG. NO: 42375-4338/4341	
HEADER NUMBER:	42312-0036
PIN NUMBER:	42663-BGA154
PIN LENGTH: L	.585 / 14.86
MATING LENGTH: M	.398 / 10.11
GOLD POINT: G	N/A
PC TAIL LENGTH: P	.097 / 2.46
TIN: T	OVERALL
CKTS:	2-36
KINKS:	NO
VOIDED CKTS:	NONE
PACKAGING:	BULK PK-40873-0041

CKTS	MATERIAL NUMBER	CKTS	MATERIAL NUMBER
02		20	
03	42375-4338	21	
04		22	
05		23	
06	42375-4341	24	
07		25	
08		26	
09		27	
10		28	
11		29	
12		30	
13		31	
14		32	
15		33	
16		34	
17		35	
18		36	
19			

REV:	ECR/ECN INFORMATION:	TITLE:	SHEET No.
U	EC No.: **UCP2017-2793** DATE: **12/20/2021**	**KK 100 HEADER ASSY FLAT VERTICAL BREAKAWAY**	**- 34 -**

DOCUMENT NUMBER:	CREATED / REVISED BY:	CHECKED BY:	APPROVED BY:
SD- 42375-001	**SS06**	**ISHWARG**	**ISHWARG**

ENG. NO: 42375-4413	
HEADER NUMBER:	42312-0036
PIN NUMBER:	42663-ABB208
PIN LENGTH: L	.455 / 11.56
MATING LENGTH: M	.240 / 6.09
GOLD POINT: G	.100 / 2.54
PC TAIL LENGTH: P	.125 / 3.18
TIN: T	.100 / 2.54
CKTS:	6-36
KINKS:	NO
VOIDED CKTS:	2, 4, 6
PACKAGING:	BULK PK-40873-0041

CKTS	ITEM NUMBER	CKTS	ITEM NUMBER
02		20	
03		21	
04		22	
05		23	
06		24	
07	42375-4413	25	
08		26	
09		27	
10		28	
11		29	
12		30	
13		31	
14		32	
15		33	
16		34	
17		35	
18		36	
19			

ENG. NO: 42375-4445	
HEADER NUMBER:	42312-0036
PIN NUMBER:	42663-0364
PLATING:	228
PIN LENGTH: L	.590 / 14.99
MATING LENGTH: M	.380 / 9.65
GOLD POINT: G	.200 / 5.08
PC TAIL LENGTH: P	.120 / 3.05
TIN: T	.135 / 3.43
CKTS:	2-36
KINKS:	NO
VOIDED CKTS:	NONE
PACKAGING:	BULK PK-40873-0041

CKTS	MATERIAL NUMBER	CKTS	MATERIAL NUMBER
02		20	
03		21	
04	42375-4445	22	
05		23	
06		24	
07		25	
08		26	
09		27	
10		28	
11		29	
12		30	
13		31	
14		32	
15		33	
16		34	
17		35	
18		36	
19			

REV:	ECR/ECN INFORMATION:	TITLE:	SHEET No.
U	EC No.: **UCP2017-2793** DATE: **12/20/2021**	**KK 100 HEADER ASSY FLAT VERTICAL BREAKAWAY**	**- 35 -**

DOCUMENT NUMBER:	CREATED / REVISED BY:	CHECKED BY:	APPROVED BY:
SD- 42375-001	**SS06**	**ISHWARG**	**ISHWARG**

ENG. NO: 42375-4549	
HEADER NUMBER:	42312-0036
PIN NUMBER:	42663-ABB208
PIN LENGTH: L	.455 / 11.56
MATING LENGTH: M	.240 / 6.09
GOLD POINT: G	.100 / 2.54
PC TAIL LENGTH: P	.125 / 3.18
TIN: T	.100 / 2.54
CKTS:	2-36
KINKS:	NO
VOIDED CKTS:	NONE
PACKAGING:	TAPE AND REEL 423751000-PK

CKTS	MATERIAL NUMBER	ENG NUMBER	CKTS	MATERIAL NUMBER	ENG NUMBER
02	22-28-4029	42375-4549	20		
03			21		
04			22		
05			23		
06			24		
07			25		
08			26		
09			27		
10			28		
11			29		
12			30		
13			31		
14			32		
15			33		
16			34		
17			35		
18			36		
19					

REV:	ECR/ECN INFORMATION:	TITLE:	SHEET No.
U	EC No.: **UCP2017-2793** DATE: **12/20/2021**	**KK 100 HEADER ASSY FLAT VERTICAL BREAKAWAY**	**- 36 -**

DOCUMENT NUMBER:	CREATED / REVISED BY:	CHECKED BY:	APPROVED BY:
SD- 42375-001	**SS06**	**ISHWARG**	**ISHWARG**