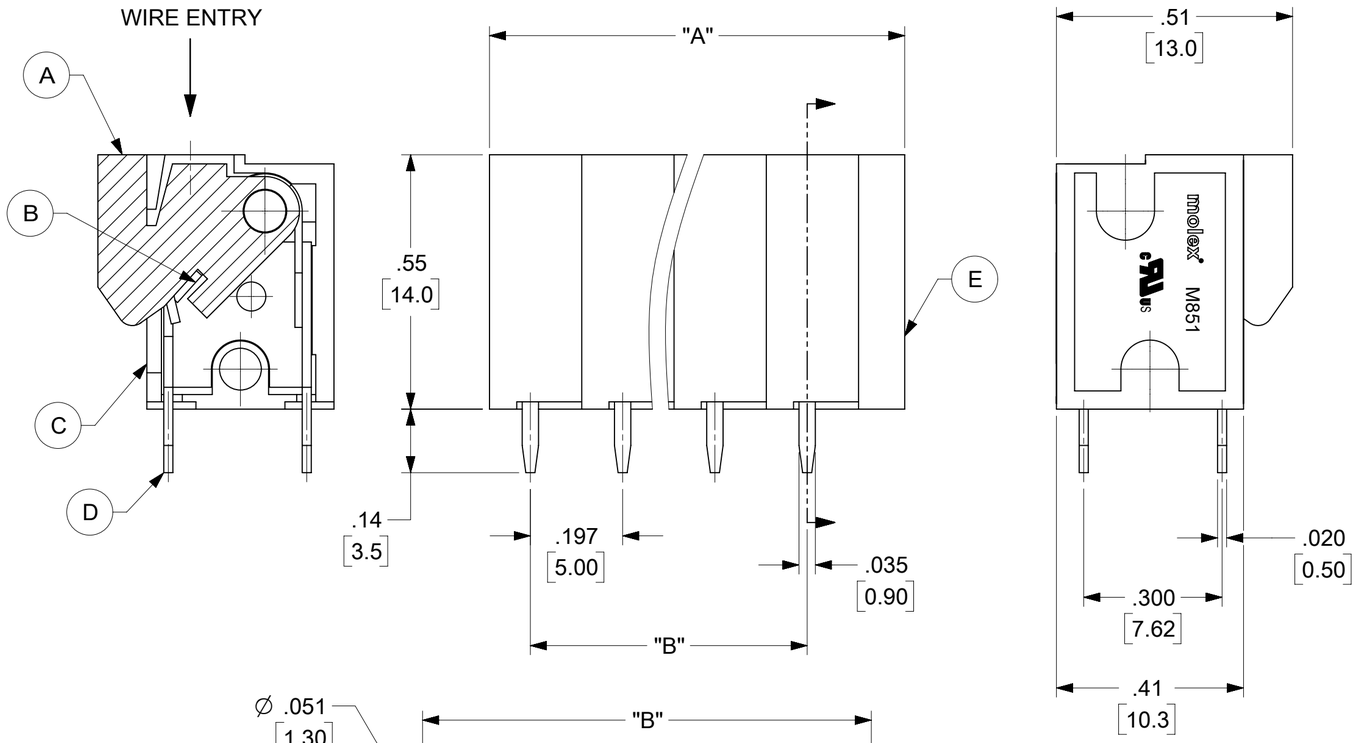


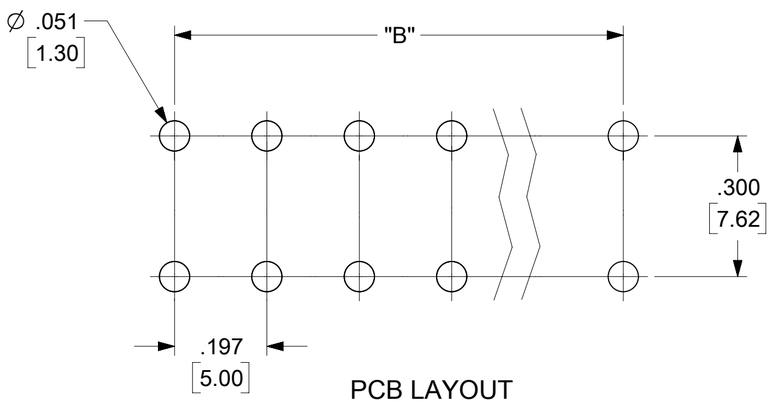


PCB LAYOUT

| PART NUMBER DATA | | | | | | | |
|---|---|---|---|---|---|---|---|
| CIRCUITS | PART NUMBER | ENGINEERING NUMBER | COLOR | DIM. "A" | | DIM. "B" | |
| | | | | IN | mm | IN | mm |
| 2 | 397000902 | M851-01-1-02-3 | GREEN | .49 | 12.5 | .197 | 5.00 |
| 3 | 397000903 | M851-01-1-03-3 | GREEN | .69 | 17.5 | .394 | 10.00 |
| 4 | 397000904 | M851-01-1-04-3 | GREEN | .89 | 22.5 | .591 | 15.00 |
| 5 | 397000905 | M851-01-1-05-3 | GREEN | 1.08 | 27.5 | .787 | 20.00 |
| 6 | 397000906 | M851-01-1-06-3 | GREEN | 1.28 | 32.5 | .984 | 25.00 |
| 7 | 397000907 | M851-01-1-07-3 | GREEN | 1.48 | 37.5 | 1.181 | 30.00 |
| 8 | 397000908 | M851-01-1-08-3 | GREEN | 1.67 | 42.5 | 1.378 | 35.00 |
| 9 | 397000909 | M851-01-1-09-3 | GREEN | 1.87 | 47.5 | 1.575 | 40.00 |
| 10 | 397000910 | M851-01-1-10-3 | GREEN | 2.07 | 52.5 | 1.772 | 45.00 |
| 11 | 397000911 | M851-01-1-11-3 | GREEN | 2.27 | 57.5 | 1.969 | 50.00 |
| 12 | 397000912 | M851-01-1-12-3 | GREEN | 2.46 | 62.5 | 2.165 | 55.00 |
| 13 | 397000913 | M851-01-1-13-3 | GREEN | 2.66 | 67.5 | 2.362 | 60.00 |
| 14 | 397000914 | M851-01-1-14-3 | GREEN | 2.86 | 72.5 | 2.559 | 65.00 |
| 15 | 397000915 | M851-01-1-15-3 | GREEN | 3.05 | 77.5 | 2.756 | 70.00 |
| 16 | 397000916 | M851-01-1-16-3 | GREEN | 3.25 | 82.5 | 2.953 | 75.00 |
| 17 | 397000917 | M851-01-1-17-3 | GREEN | 3.45 | 87.5 | 3.150 | 80.00 |
| 18 | 397000918 | M851-01-1-18-3 | GREEN | 3.64 | 92.5 | 3.346 | 85.00 |
| 19 | 397000919 | M851-01-1-19-3 | GREEN | 3.84 | 97.5 | 3.543 | 90.00 |
| 20 | 397000920 | M851-01-1-20-3 | GREEN | 4.04 | 102.5 | 3.740 | 95.00 |
| 21 | 397000921 | M851-01-1-21-3 | GREEN | 4.23 | 107.5 | 3.937 | 100.00 |
| 22 | 397000922 | M851-01-1-22-3 | GREEN | 4.43 | 112.5 | 4.134 | 105.00 |
| 23 | 397000923 | M851-01-1-23-3 | GREEN | 4.63 | 117.5 | 4.331 | 110.00 |
| 24 | 397000924 | M851-01-1-24-3 | GREEN | 4.82 | 122.5 | 4.528 | 115.00 |

SPECIFICATIONS:

1. MATERIAL:
   - A. BUTTON: PA66 UL94 V-0
   - B. SPRING: ST. STEEL
   - C. BODY : PA66 UL94 V-0
   - D. TERMINAL: BRASS TIN PLATED
   - E. COVER: PA66 UL94 V-0
2. WIRE SIZE: 14 TO 24 AWG (SOL/STR) (C1)
3. ELECTRICAL RATING (UL): 300V, 10A
4. WIRE STRIP LENGTH: .39 (10.0mm)
5. POWER FREQUENCYE WITHSTAND: AC 2000V FOR 1 MINUTE
6. INSULATION RESISTANCE: DC 500V, 500MΩ
7. RATED IMPULSE VOLTAGE: 4000V PLUS AND MINUS 5 TIMES EACH
8. OPERATING TEMPERATURE : -40°C TO +115°C (C1)
9. MAX SOLDERING TEMPERATURE : +260°C FOR 5 SECONDS

| TOLERANCES | | | |
|---|---|---|---|
| MM | TOL | INCH | TOL |
| 0-6 | ±0.25 | 0-.24 | ±.010 |
| >6-30 | ±0.40 | >.24-1.18 | ±.016 |
| >30-120 | ±0.50 | >1.18-4.76 | ±.020 |
| >120 | ±0.80 | >4.76 | ±.031 |

ENGINEERING NUMBER LEGEND

M851 - 01 - 1 - XX - X

- M851 - SERIES
- 01 - STYLE
- 1 - PITCH
- XX - POLES
- X - COLOR

THIS DRAWING CONTAINS INFORMATION THAT IS PROPRIETARY TO MOLEX ELECTRONIC TECHNOLOGIES, LLC AND SHOULD NOT BE USED WITHOUT WRITTEN PERMISSION

FUNCTIONAL SYMBOLS: FA = 0; FC = 0; FP = 0

DIVISIONAL SYMBOLS

DIMENSION UNITS: INCH/MM | SCALE: 4:1

GENERAL TOLERANCES (UNLESS SPECIFIED)

| | MM | INCH |
|---|---|---|
| 4 PLACES | ± --- | ± --- |
| 3 PLACES | ± --- | ± SEE CHART |
| 2 PLACES | ± SEE CHART | ± SEE CHART |
| 1 PLACE | ± SEE CHART | ± --- |
| 0 PLACES | ± --- | ± --- |
| ANGULAR TOL | ± --- | |

DRAFT WHERE APPLICABLE MUST REMAIN WITHIN DIMENSIONS

CURRENT REV DESC: MIGRATED TO NX. MODIFIED WIRE SIZE & TEMP RATING

EC NO: 708205

DRWN: ABENJAMINLW 2022/05/25

CHK'D: DACHAMMER 2022/05/25

APPR: JFMURPHY 2022/06/13

INITIAL REVISION:

DRWN: RSTONE 2013/11/20

APPR: JFMURPHY 2013/12/26

THIRD ANGLE PROJECTION | DRAWING: C-SIZE | SERIES: 39700

molex

SPRING TERMINAL BLOCK
.197 (5.00) PITCH VERTICAL MODULAR

PRODUCT CUSTOMER DRAWING

| DOCUMENT NUMBER | DOC TYPE | DOC PART | REVISION |
|---|---|---|---|
| SD-39700-010 | PSD | 001 | C1 |

| MATERIAL NUMBER | CUSTOMER | SHEET NUMBER |
|---|---|---|
| SEE CHART | GENERAL MARKET | 1 OF 1 |

| DOCUMENT STATUS | P1 | RELEASE DATE | 2022/06/13 16:49:41 |
|---|---|---|---|

FORMAT: Eng-lega-master-lb-prod-C
REVISION: K1
DATE: 2021/05/01