LENGTH TABLE				
MATERIAL NO. (STANDARD)	MATERIAL NO. (-56 OPT.)	NO. OF CIRCUITS	"B"	"A"
399200302	399200602	02	15.0 (.591)	32 (1.25)
399200303	399200603	03	30.0 (1.181)	47 (1.84)
399200304	399200604	04	45.0 (1.772)	62 (2.43)
399200305	399200605	05	60.0 (2.362)	77 (3.02)
399200306	399200606	06	75.0 (2.952)	92 (3.61)
399200307	399200607	07	90.0 (3.543)	107 (4.20)
399200308	399200608	08	105.0 (4.134)	122 (4.79)
399200309	399200609	09	120.0 (4.724)	137 (5.38)
399200310	399200610	10	135.0 (5.315)	152 (5.97)
399200311	399200611	11	150.0 (5.906)	167 (6.57)
399200312	399200612	12	165.0 (6.496)	182 (7.16)

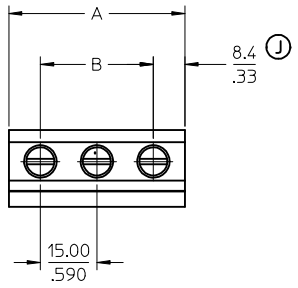

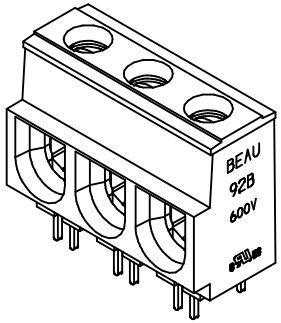

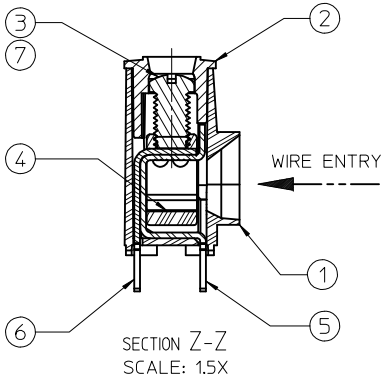

SECTION Z-Z
SCALE: 1.5X

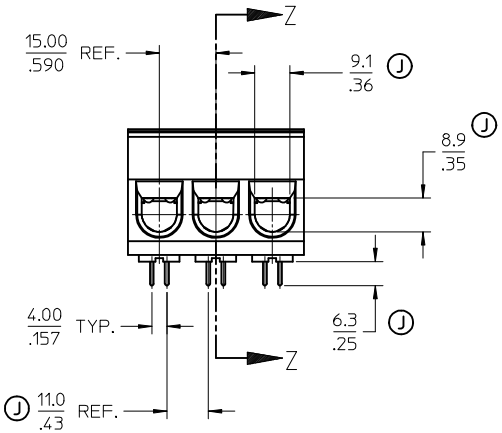

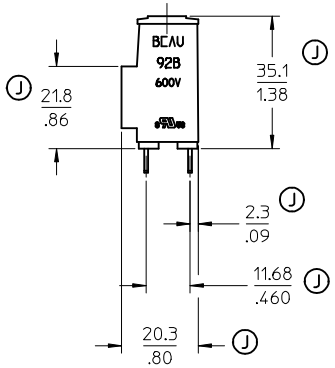

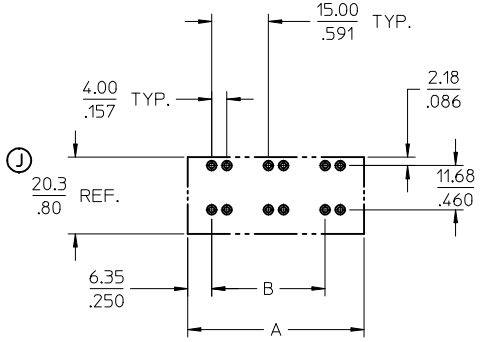

RECOMMENDED PTH PATTERN
Ø1.52 (.060) MINIMUM FINISHED HOLE
SCALE 1:1

NOTES:

1. MATERIAL: SEE TABLE.
2. FINISHES: SEE TABLE.
3. PRODUCT SPECIFICATION: NOT REQUIRED.
4. PACKAGING: NOT REQUIRED.
5. MATES WITH: NONE.
6. ALL FEATURES ARE TYPICAL UNLESS OTHERWISE NOTED.
7. "XX" REFERS TO THE NUMBER OF CIRCUIT POSITIONS
8. DESIGNED TO MEET NEC & UL 1059 CLASS C 600 VOLTS
9. MULTIPLE TAIL DESIGN FOR LOWER PCB CURRENT DENSITIES
10. PROVEN PRESSURE CLAMP STYLE CONNECTION
11. AVAILABLE IN VARIOUS LENGTHS
12. WINDOW ACCEPTS 133/23 STRANDED #2 AWG, #3 AWG AND 19 STRAND #1 AWG

ITEM	QTY.	DESCRIPTION	MATERIAL	FINISH
7	"XX"	SCREW, 1/4-28, SLOTTED, ST. STEEL	STAINLESS STEEL	TIN
6	"XX"	OUTER TERMINAL	COPPER	TIN
5	"XX"	INNER TERMINAL	COPPER	TIN
4	"XX"	CAGE	BRASS	NICKEL
3	"XX"	SCREW, 1/4-28, SLOTTED, BRONZE	BRONZE	TIN
2	1	COVER	THERMOPLASTIC	BLACK
1	1	BODY	THERMOPLASTIC	BLACK

REDRAWN, 35 WAS 351
CORRECTED, MM/IN DEC. PL.
EC NO: IPG2015-0628 2014/10/03
DRWN:RSTONE 2014/10/27
CHKD:B ARDEN 2014/10/23
APPR:JFMURPHY
DESCRIPTION
REV

QUALITY SYMBOLS
▼=0
▽=0

GENERAL TOLERANCES (UNLESS SPECIFIED)

	mm	INCH
4 PLACES	± ---	± ---
3 PLACES	± ---	± .005
2 PLACES	± 0.13	± .01
1 PLACE	± 0.3	± ---
0 PLACE	± ---	± ---
ANGULAR ± 2 °		

DRAFT WHERE APPLICABLE MUST REMAIN WITHIN DIMENSIONS

DIMENSION STYLE: MM/IN
SCALE: 1:1
DESIGN UNITS: INCH
THIRD ANGLE PROJECTION

DRAWN BY: RSTONE DATE: 2014/10/03
CHECKED BY: B ARDEN DATE: 2014/10/27
APPROVED BY: JFMURPHY DATE: 2014/10/23
MATERIAL NO.: SEE CHART
SIZE: C

TITLE: SR BTS #1-#8AWG 600V
molex
DOCUMENT NO.: SD-39920-006
SHEET NO.: 1 OF 1

THIS DRAWING CONTAINS INFORMATION THAT IS PROPRIETARY TO MOLEX INCORPORATED AND SHOULD NOT BE USED WITHOUT WRITTEN PERMISSION