


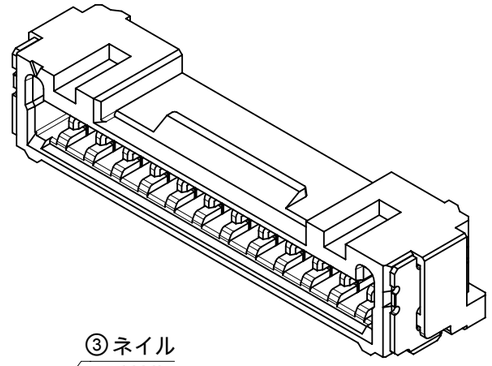

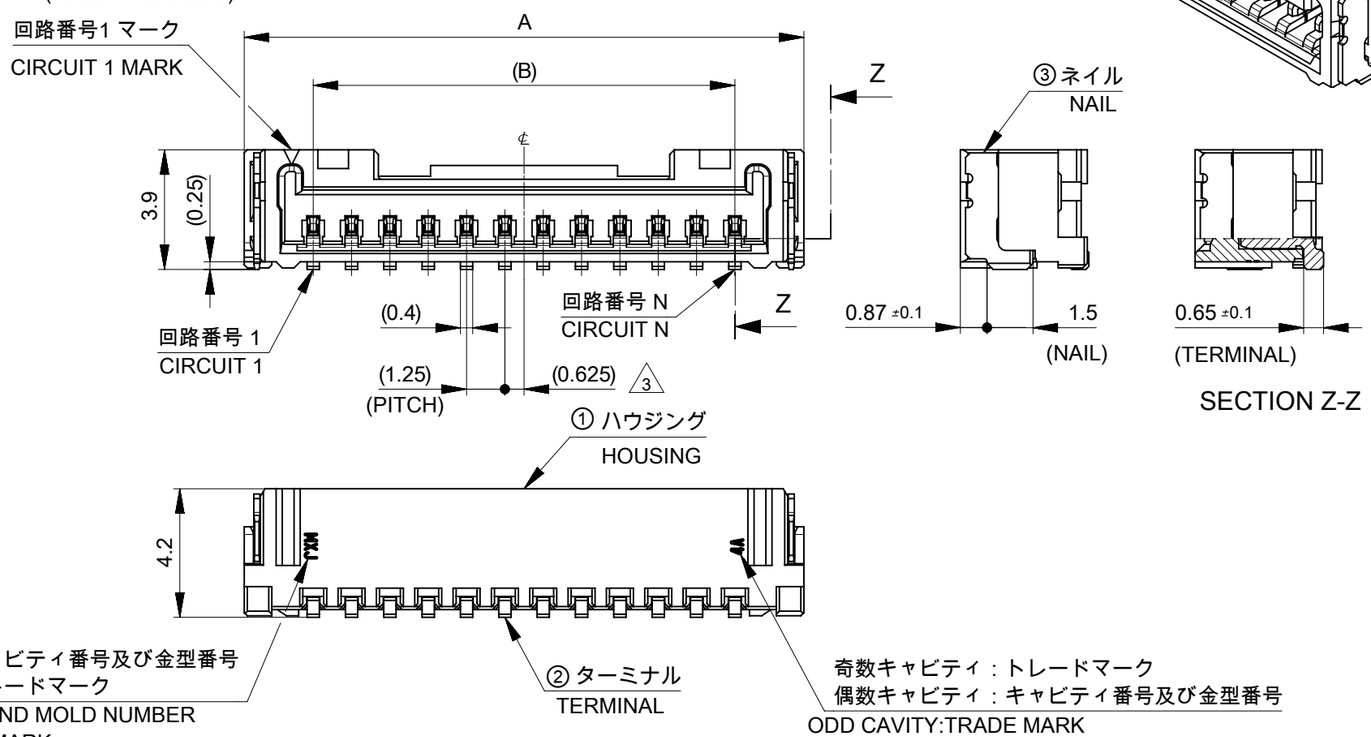





SECTION Z-Z

奇数キャビティ：キャビティ番号及び金型番号
偶数キャビティ：トレードマーク
ODD CAVITY:CAVITY AND MOLD NUMBER
EVEN CAVITY:TRADE MARK

奇数キャビティ：トレードマーク
偶数キャビティ：キャビティ番号及び金型番号
ODD CAVITY:TRADE MARK
EVEN CAVITY:CAVITY AND MOLD NUMBER

## 注記 NOTES

1. 材料及び仕上げ（めっき仕様）：TABLE 1, TABLE 2
   MATERIAL AND FINISHES(PLATING SPECIFICATION)
   : SEE TABLE 1. TABLE 2
2. 嵌合相手：505565シリーズ
   MATE WITH: 505565SERIES
3. 偶数極 に適用
   APPLY TO EVEN CIRCUIT.
4. 製品仕様書：5055650002 PS 000
   PRODUCT SPECIFICATION:5055650002 PS 000
5. 発注番号：SHEET 5 参照
   ORDER NUMBER : PLEASE REFER TO SHEET 5

505567 ** * *

| 極数 CIRCUIT SIZE |
|---|

| 番号 NO. | 接点部 金めっき厚 CONTACT GOLD PLATING THICKNESS [MICROMETER MINIMUM] |
|---|---|
| 8 | 0.1 |
| 3 | 0.38 |
| 5 | 0.76 |

| 番号 NO. | ハウジングカラー HOUSING COLOR |
|---|---|
| 0 | ナチュラル(ベージュ) NATURAL(BEIGE) |
| 1 | 黒 BLACK |
| 2 | 赤 RED |
| 3 | 黄 YELLOW |
| 4 | 青 BLUE |
| 6 | 緑 GREEN |
| 8 | 橙 ORANGE |

6. ターミナルとネイルの平坦度は0.1mm以下
   TERMINAL AND NAIL COPLANARITY : 0.1mm MAXIMUM.
7. コネクタ取扱説明書：5055650000-AS PS 000
   APPLICATION SPECIFICATION : 5055650000-AS PS 000

### 1 TABLE 1

| 番号 NO. | 部品 PART | 材質 MATERIAL |
|---|---|---|
| ① | ハウジング HOUSING | ポリアミド(PA),ガラス充填,UL94 V-0,色：SHEET 5参照<br>POLYAMIDE (PA),GLASS FILLED,UL94 V-0,COLOR:SEE SHEET 5 |
| ② | ターミナル TERMINAL | 黄銅<br>BRASS |
| | | 接点部：金めっき めっき厚は注記5参照<br>CONTACT : GOLD PLATING<br>PLATING THICKNESS : SEE NOTE 5. |
| | | ニッケルめっき(下地めっき)：1.0 MICROMETER MINIMUM<br>NICKEL PLATING (UNDER PLATING) |
| ③ | ネイル NAIL | 黄銅<br>BRASS |
| | | 錫めっき：1.0 MICROMETER MINIMUM<br>MATTE TIN PLATING |
| | | ニッケルめっき(下地めっき)：1.0 MICROMETER MINIMUM<br>NICKEL PLATING (UNDER PLATING) |

| H | G | F | E | D | C | B | A | 極数 CIRCUIT SIZE |
|---|---|---|---|---|---|---|---|---|
| 49.4 | 45.4 | 20.2 | 44±0.3 | 10.7 | 22.2 | 18.75 | 23.25 | 16 |
| | | | | | 20.95 | 17.5 | 22 | 15 |
| | | | | | 19.7 | 16.25 | 20.75 | 14 |
| 37.4 | 33.4 | 14.2 | 32±0.3 | 9.2 | 18.45 | 15 | 19.5 | 13 |
| | | | | | 17.2 | 13.75 | 18.25 | 12 |
| | | | | | 15.95 | 12.5 | 17 | 11 |
| | | | | | 14.7 | 11.25 | 15.75 | 10 |
| 29.4 | 25.4 | 11.5 | $24^{+0.3}_{-0.1}$ | 6.7 | 13.45 | 10 | 14.5 | 9 |
| | | | | | 12.2 | 8.75 | 13.25 | 8 |
| | | | | | 10.95 | 7.5 | 12 | 7 |
| | | | | 6.6 | 9.7 | 6.25 | 10.75 | 6 |
| | | | | 5.35 | 8.45 | 5 | 9.5 | 5 |
| | | | | 4.1 | 7.2 | 3.75 | 8.25 | 4 |
| 21.4 | 17.4 | 7.5 | $16^{+0.3}_{-0.1}$ | 2.85 | 5.95 | 2.5 | 7 | 3 |
| | | | | 1.9 | 4.7 | 1.25 | 5.75 | 2 |

THIS DRAWING CONTAINS INFORMATION THAT IS PROPRIETARY TO MOLEX ELECTRONIC TECHNOLOGIES, LLC AND SHOULD NOT BE USED WITHOUT WRITTEN PERMISSION

| DIMENSION UNITS | SCALE |
|---|---|
| mm | NTS |

GENERAL TOLERANCES (UNLESS SPECIFIED)

| | | |
|---|---|---|
| ANGULAR TOL | ± | 3.0 ° |
| 4 PLACES | ± | 0.2 |
| 3 PLACES | ± | 0.2 |
| 2 PLACES | ± | 0.2 |
| 1 PLACE | ± | 0.2 |
| 0 PLACES | ± | 0.2 |

DRAFT WHERE APPLICABLE MUST REMAIN WITHIN DIMENSIONS

CURRENT REV DESC: REMOVED OBSOLETED PART NUMBERS AS PER PCN#515932.

EC NO: 812554
DRWN: RAVINR1 2025/01/28
CHK'D: GGA 2025/02/25
APPR: GGA 2025/02/25

INITIAL REVISION:
DRWN: RWATANABE01 2017/11/28
APPR: TKANEKO 2017/12/06

THIRD ANGLE PROJECTION | DRAWING: A3-SIZE | SERIES: 505567

molex

MICRO-LOCK PLUS 1.25 W/B
SINGLE ROW RIGHT ANGLE SMT PLUG ASSEMBLY
GOLD PLATING

PRODUCT CUSTOMER DRAWING

| DOCUMENT NUMBER | DOC TYPE | DOC PART | REVISION |
|---|---|---|---|
| 5055670010-SD | PSD | 000 | D1 |

| MATERIAL NUMBER | CUSTOMER | SHEET NUMBER |
|---|---|---|
| SEE TABLE | GENERAL | 1 OF 5 |

| DOCUMENT STATUS | P1 | RELEASE DATE | 2025/02/25 06:03:54 |
|---|---|---|---|

FORMAT: master-tb-prod-A3
REVISION: J1
DATE: 2021/05/01

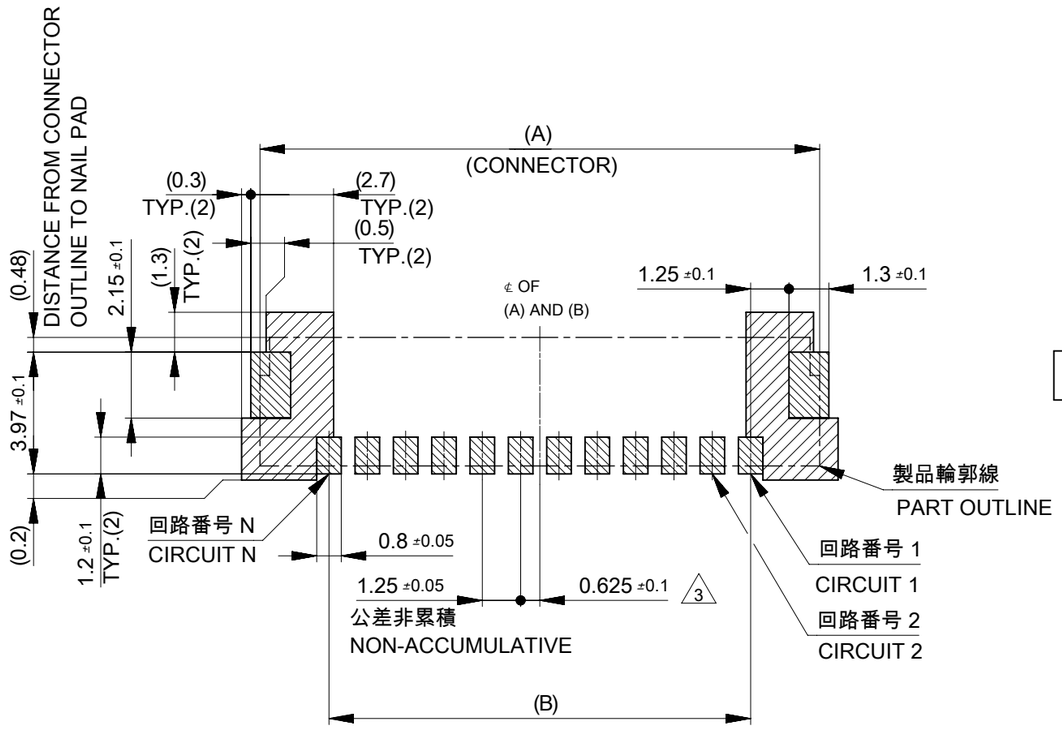


推奨基板レイアウト
RECOMMENDED PCB PATTERN LAYOUT

( 参考：基板厚1.6mm, メタルマスク厚さ 0.15mm, マスク開口率 100%)
(REFERENCE: PCB THICKNESS 1.6mm, STENCIL THICKNESS 0.15mm, APERTURE RATIO 100%)

パターン非推奨エリア
パターンを引き回す際は、製品機能に影響がないことをご確認ください。
PATTERN IS NOT RECOMMENDED ON THE HATCHING AREA
PLEASE CHECK NOT TO HAVE PROBLEM FOR PRODUCT FUNCTION
WHEN SETTING PATTERN ON THE HATCHING AREA.

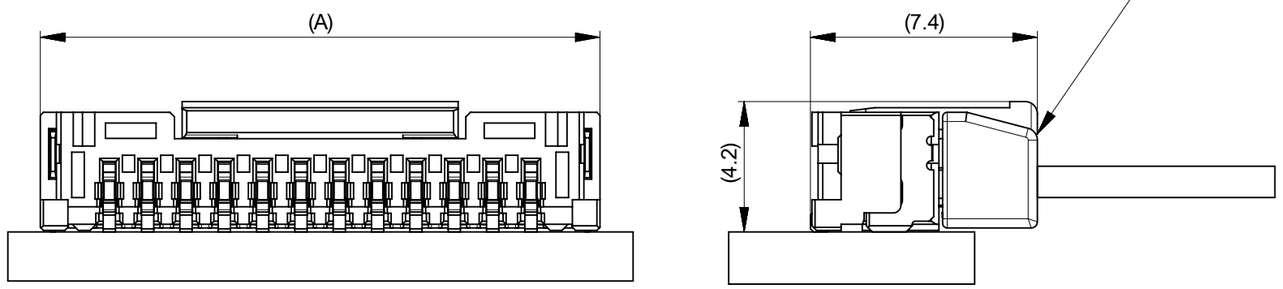


嵌合状態図
MATED CONNECTORS

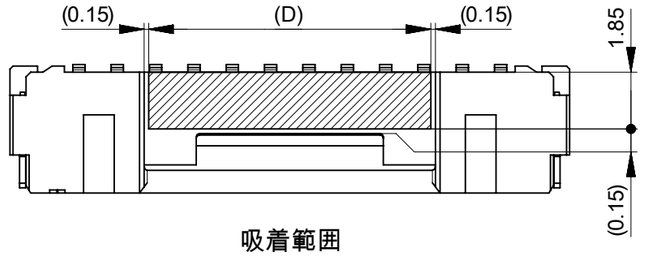


吸着範囲
SUCTION AREA

THIS DRAWING CONTAINS INFORMATION THAT IS PROPRIETARY TO MOLEX ELECTRONIC TECHNOLOGIES, LLC AND SHOULD NOT BE USED WITHOUT WRITTEN PERMISSION

| DIMENSION UNITS | SCALE |
|---|---|
| mm | NTS |

GENERAL TOLERANCES (UNLESS SPECIFIED)

| | | |
|---|---|---|
| ANGULAR TOL | ± | 3.0 ° |
| 4 PLACES | ± | 0.2 |
| 3 PLACES | ± | 0.2 |
| 2 PLACES | ± | 0.2 |
| 1 PLACE | ± | 0.2 |
| 0 PLACES | ± | 0.2 |

DRAFT WHERE APPLICABLE MUST REMAIN WITHIN DIMENSIONS

CURRENT REV DESC: REMOVED OBSOLETED PART NUMBERS AS PER PCN#515932.

EC NO: 812554
DRWN: RAVINR1 2025/01/28
CHK'D: GGA 2025/02/25
APPR: GGA 2025/02/25

INITIAL REVISION:
DRWN: RWATANABE01 2017/11/28
APPR: TKANEKO 2017/12/06

THIRD ANGLE PROJECTION | DRAWING: A3-SIZE | SERIES: 505567

molex

MICRO-LOCK PLUS 1.25 W/B
SINGLE ROW RIGHT ANGLE SMT PLUG ASSEMBLY
GOLD PLATING

PRODUCT CUSTOMER DRAWING

| DOCUMENT NUMBER | DOC TYPE | DOC PART | REVISION |
|---|---|---|---|
| 5055670010-SD | PSD | 000 | D1 |

| MATERIAL NUMBER | CUSTOMER | SHEET NUMBER |
|---|---|---|
| SEE TABLE | GENERAL | 2 OF 5 |

| DOCUMENT STATUS | P1 | RELEASE DATE | 2025/02/25 06:03:54 |
|---|---|---|---|

FORMAT: master-lb-prod-A3
REVISION: J1
DATE: 2021/05/01

# 製品形状
# PRODUCT SHAPE

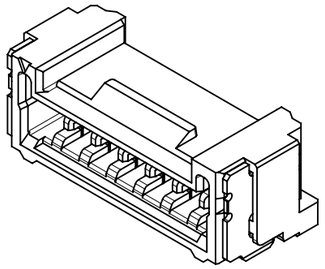

2-11極
2-11 CIRCUIT

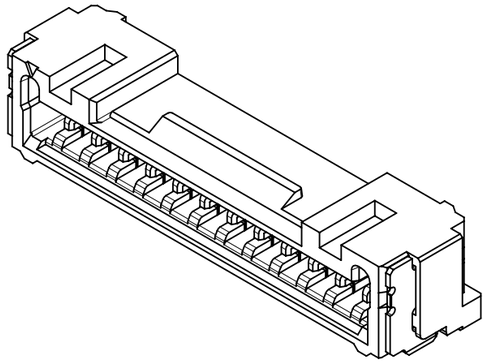

12-13極
12-13 CIRCUIT

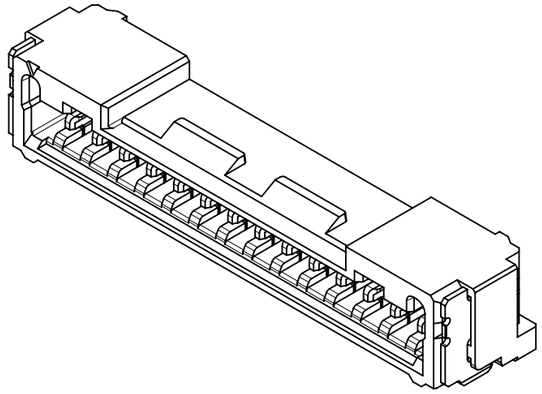

14極
14 CIRCUIT

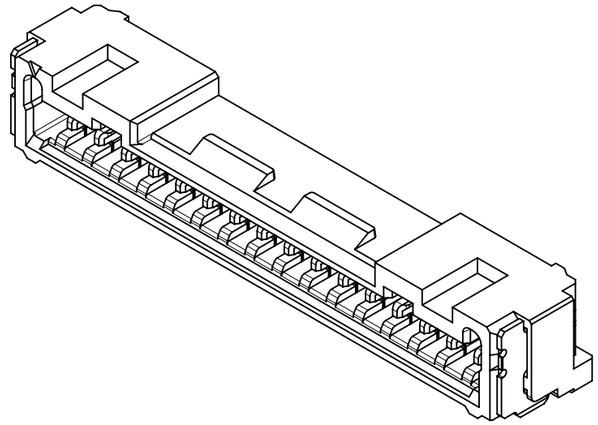

15-16極
15-16 CIRCUIT

THIS DRAWING CONTAINS INFORMATION THAT IS PROPRIETARY TO MOLEX ELECTRONIC TECHNOLOGIES, LLC AND SHOULD NOT BE USED WITHOUT WRITTEN PERMISSION

| DIMENSION UNITS | SCALE |
|---|---|
| mm | NTS |

| GENERAL TOLERANCES (UNLESS SPECIFIED) | | |
|---|---|---|
| ANGULAR TOL | ± | 3.0 ° |
| 4 PLACES | ± | 0.2 |
| 3 PLACES | ± | 0.2 |
| 2 PLACES | ± | 0.2 |
| 1 PLACE | ± | 0.2 |
| 0 PLACES | ± | 0.2 |

DRAFT WHERE APPLICABLE MUST REMAIN WITHIN DIMENSIONS

CURRENT REV DESC: REMOVED OBSOLETED PART NUMBERS AS PER PCN#515932.

| | | |
|---|---|---|
| EC NO: | 812554 | |
| DRWN: | RAVINR1 | 2025/01/28 |
| CHK'D: | GGA | 2025/02/25 |
| APPR: | GGA | 2025/02/25 |

INITIAL REVISION:

| | | |
|---|---|---|
| DRWN: | RWATANABE01 | 2017/11/28 |
| APPR: | TKANEKO | 2017/12/06 |

molex

MICRO-LOCK PLUS 1.25 W/B
SINGLE ROW RIGHT ANGLE SMT PLUG ASSEMBLY
GOLD PLATING

PRODUCT CUSTOMER DRAWING

| DOCUMENT NUMBER | DOC TYPE | DOC PART | REVISION |
|---|---|---|---|
| 5055670010-SD | PSD | 000 | D1 |

| THIRD ANGLE PROJECTION | DRAWING | SERIES | MATERIAL NUMBER | CUSTOMER | SHEET NUMBER |
|---|---|---|---|---|---|
| | A3-SIZE | 505567 | SEE TABLE | GENERAL | 3 OF 5 |

| DOCUMENT STATUS | P1 | RELEASE DATE | 2025/02/25 06:03:54 |
|---|---|---|---|

FORMAT: master-ib-prod-A3
REVISION: J1
DATE: 2021/05/01

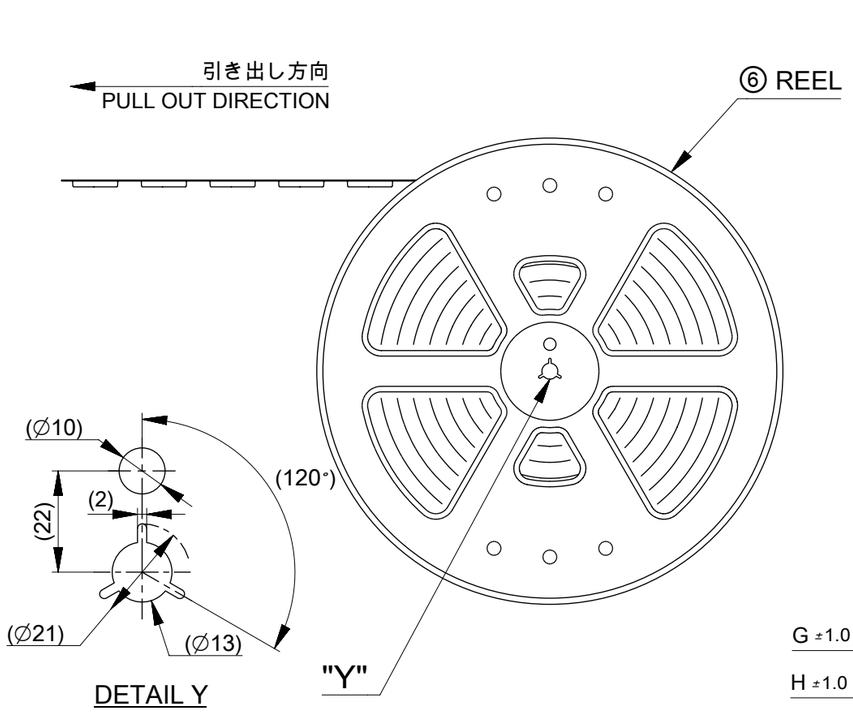


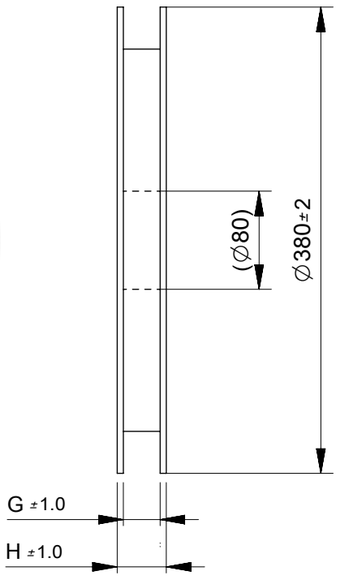


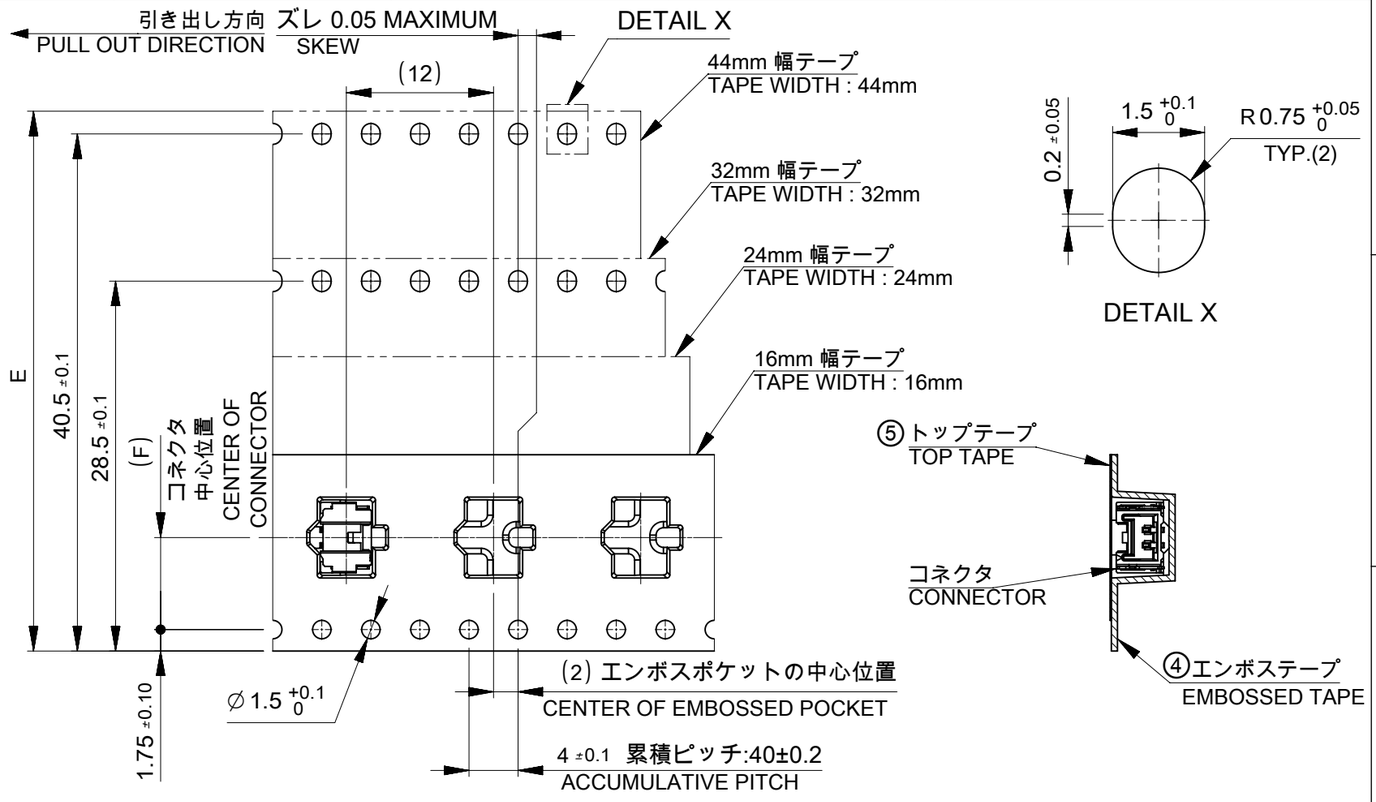


## 注記 NOTES

8. 梱包数量：1200個 / リール
   NUMBER OF CONNECTORS : 1200 PCS/REEL.
9. リードテープ長さ LEAD TAPE LENGTH.

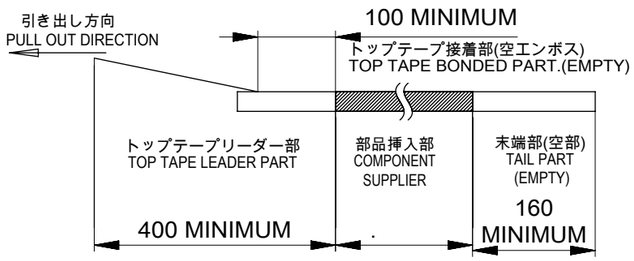


10. トップテープの剥離強度はIEC60286-3に準拠
    TOP TAPE PEELING FORCE IS DEFINED BY IEC60286-3.
11. 梱包仕様書：5055679200 PS 200
    PACKING SPECIFICATION : 5055679200 PS 200

⚠1 TABLE 2

| 番号<br>NO. | 部品<br>PART | 材質<br>MATERIAL |
|---|---|---|
| ④ | エンボステープ<br>EMBOSSED TAPE | ポリスチレン(PS)<br>POLYSTYRENE(PS) |
| ⑤ | トップテープ<br>TOP TAPE | ポリエチレン(PE), その他<br>POLYETHYLENE(PE), ETC |
| ⑥ | リール<br>REEL | ポリスチレン(PS) < リサイクル材を含む ><br>POLYSTYRENE(PS) < RECYCLE MATERIAL CONTAINED > |

| DOCUMENT STATUS | P1 | RELEASE DATE | 2025/02/25 06:03:54 |
|---|---|---|---|

THIS DRAWING CONTAINS INFORMATION THAT IS PROPRIETARY TO MOLEX ELECTRONIC TECHNOLOGIES, LLC AND SHOULD NOT BE USED WITHOUT WRITTEN PERMISSION

| DIMENSION UNITS | SCALE |
|---|---|
| mm | NTS |

GENERAL TOLERANCES (UNLESS SPECIFIED)

| | | |
|---|---|---|
| ANGULAR TOL | ± | 3.0 ° |
| 4 PLACES | ± | 0.2 |
| 3 PLACES | ± | 0.2 |
| 2 PLACES | ± | 0.2 |
| 1 PLACE | ± | 0.2 |
| 0 PLACES | ± | 0.2 |

DRAFT WHERE APPLICABLE MUST REMAIN WITHIN DIMENSIONS

CURRENT REV DESC: REMOVED OBSOLETED PART NUMBERS AS PER PCN#515932.

EC NO: 812554
DRWN: RAVINR1 2025/01/28
CHK'D: GGA 2025/02/25
APPR: GGA 2025/02/25

INITIAL REVISION:
DRWN: RWATANABE01 2017/11/28
APPR: TKANEKO 2017/12/06

THIRD ANGLE PROJECTION | DRAWING: A3-SIZE | SERIES: 505567

molex

MICRO-LOCK PLUS 1.25 W/B
SINGLE ROW RIGHT ANGLE SMT PLUG ASSEMBLY
GOLD PLATING

PRODUCT CUSTOMER DRAWING

| DOCUMENT NUMBER | DOC TYPE | DOC PART | REVISION |
|---|---|---|---|
| 5055670010-SD | PSD | 000 | D1 |

| MATERIAL NUMBER | CUSTOMER | SHEET NUMBER |
|---|---|---|
| SEE TABLE | GENERAL | 4 OF 5 |

FORMAT: master-tb-prod-A3
REVISION: J1
DATE: 2021/05/01

## △5 505567**8*発注番号一覧 ORDER NUMBER LIST

| BLUE | RED | BLACK | NATURAL (BEIGE) | HOUSING COLOR |
|---|---|---|---|---|
| 5055671684 | 5055671682 | 5055671681 | 5055671680 | 16 |
| 5055671584 | 5055671582 | 5055671581 | 5055671580 | 15 |
| 5055671484 | 5055671482 | 5055671481 | 5055671480 | 14 |
| 5055671384 | 5055671382 | 5055671381 | 5055671380 | 13 |
| 5055671284 | 5055671282 | 5055671281 | 5055671280 | 12 |
| 5055671184 | 5055671182 | 5055671181 | 5055671180 | 11 |
| 5055671084 | 5055671082 | 5055671081 | 5055671080 | 10 |
| 5055670984 | 5055670982 | 5055670981 | 5055670980 | 9 |
| 5055670884 | 5055670882 | 5055670881 | 5055670880 | 8 |
| 5055670784 | 5055670782 | 5055670781 | 5055670780 | 7 |
| 5055670684 | 5055670682 | 5055670681 | 5055670680 | 6 |
| 5055670584 | 5055670582 | 5055670581 | 5055670580 | 5 |
| 5055670484 | 5055670482 | 5055670481 | 5055670480 | 4 |
| 5055670384 | 5055670382 | 5055670381 | 5055670380 | 3 |
| 5055670284 | 5055670282 | 5055670281 | 5055670280 | 2 |
| 発注番号：ORDER NUMBER | | | | 極数 CIRCUIT SIZE |
| 梱包形態：エンボステープ梱包 PACKAGING : EMBOSSED TAPE AND REEL | | | | |

## △5 505567**5*発注番号一覧 ORDER NUMBER LIST

| ORANGE | GREEN | BLUE | YELLOW | RED | BLACK | NATURAL (BEIGE) | HOUSING COLOR |
|---|---|---|---|---|---|---|---|
| 5055671658 | 5055671656 | 5055671654 | 5055671653 | 5055671652 | 5055671651 | 5055671650 | 16 |
| 5055671558 | 5055671556 | 5055671554 | 5055671553 | 5055671552 | 5055671551 | 5055671550 | 15 |
| 5055671458 | 5055671456 | 5055671454 | 5055671453 | 5055671452 | 5055671451 | 5055671450 | 14 |
| 5055671358 | 5055671356 | 5055671354 | 5055671353 | 5055671352 | 5055671351 | 5055671350 | 13 |
| 5055671258 | 5055671256 | 5055671254 | 5055671253 | 5055671252 | 5055671251 | 5055671250 | 12 |
| 5055671158 | 5055671156 | 5055671154 | 5055671153 | 5055671152 | 5055671151 | 5055671150 | 11 |
| 5055671058 | 5055671056 | 5055671054 | 5055671053 | 5055671052 | 5055671051 | 5055671050 | 10 |
| 5055670958 | 5055670956 | 5055670954 | 5055670953 | 5055670952 | 5055670951 | 5055670950 | 9 |
| 5055670858 | 5055670856 | 5055670854 | 5055670853 | 5055670852 | 5055670851 | 5055670850 | 8 |
| 5055670758 | 5055670756 | 5055670754 | 5055670753 | 5055670752 | 5055670751 | 5055670750 | 7 |
| 5055670658 | 5055670656 | 5055670654 | 5055670653 | 5055670652 | 5055670651 | 5055670650 | 6 |
| 5055670558 | 5055670556 | 5055670554 | 5055670553 | 5055670552 | 5055670551 | 5055670550 | 5 |
| 5055670458 | 5055670456 | 5055670454 | 5055670453 | 5055670452 | 5055670451 | 5055670450 | 4 |
| 5055670358 | 5055670356 | 5055670354 | 5055670353 | 5055670352 | 5055670351 | 5055670350 | 3 |
| 5055670258 | 5055670256 | 5055670254 | 5055670253 | 5055670252 | 5055670251 | 5055670250 | 2 |
| 発注番号：ORDER NUMBER | | | | | | | 極数 CIRCUIT SIZE |
| 梱包形態：エンボステープ梱包 PACKAGING : EMBOSSED TAPE AND REEL | | | | | | | |

## △5 505567**3*発注番号一覧 ORDER NUMBER LIST

| ORANGE | GREEN | BLUE | YELLOW | RED | BLACK | NATURAL (BEIGE) | HOUSING COLOR |
|---|---|---|---|---|---|---|---|
| 5055671638 | 5055671636 | 5055671634 | 5055671633 | 5055671632 | 5055671631 | 5055671630 | 16 |
| 5055671538 | 5055671536 | 5055671534 | 5055671533 | 5055671532 | 5055671531 | 5055671530 | 15 |
| 5055671438 | 5055671436 | 5055671434 | 5055671433 | 5055671432 | 5055671431 | 5055671430 | 14 |
| 5055671338 | 5055671336 | 5055671334 | 5055671333 | 5055671332 | 5055671331 | 5055671330 | 13 |
| 5055671238 | 5055671236 | 5055671234 | 5055671233 | 5055671232 | 5055671231 | 5055671230 | 12 |
| 5055671138 | 5055671136 | 5055671134 | 5055671133 | 5055671132 | 5055671131 | 5055671130 | 11 |
| 5055671038 | 5055671036 | 5055671034 | 5055671033 | 5055671032 | 5055671031 | 5055671030 | 10 |
| 5055670938 | 5055670936 | 5055670934 | 5055670933 | 5055670932 | 5055670931 | 5055670930 | 9 |
| 5055670838 | 5055670836 | 5055670834 | 5055670833 | 5055670832 | 5055670831 | 5055670830 | 8 |
| 5055670738 | 5055670736 | 5055670734 | 5055670733 | 5055670732 | 5055670731 | 5055670730 | 7 |
| 5055670638 | 5055670636 | 5055670634 | 5055670633 | 5055670632 | 5055670631 | 5055670630 | 6 |
| 5055670538 | 5055670536 | 5055670534 | 5055670533 | 5055670532 | 5055670531 | 5055670530 | 5 |
| 5055670438 | 5055670436 | 5055670434 | 5055670433 | 5055670432 | 5055670431 | 5055670430 | 4 |
| 5055670338 | 5055670336 | 5055670334 | 5055670333 | 5055670332 | 5055670331 | 5055670330 | 3 |
| 5055670238 | 5055670236 | 5055670234 | 5055670233 | 5055670232 | 5055670231 | 5055670230 | 2 |
| 発注番号：ORDER NUMBER | | | | | | | 極数 CIRCUIT SIZE |
| 梱包形態：エンボステープ梱包 PACKAGING : EMBOSSED TAPE AND REEL | | | | | | | |

THIS DRAWING CONTAINS INFORMATION THAT IS PROPRIETARY TO MOLEX ELECTRONIC TECHNOLOGIES, LLC AND SHOULD NOT BE USED WITHOUT WRITTEN PERMISSION

| DIMENSION UNITS | SCALE |
|---|---|
| mm | NTS |

GENERAL TOLERANCES (UNLESS SPECIFIED)

| | | |
|---|---|---|
| ANGULAR TOL | ± | 3.0 ° |
| 4 PLACES | ± | 0.2 |
| 3 PLACES | ± | 0.2 |
| 2 PLACES | ± | 0.2 |
| 1 PLACE | ± | 0.2 |
| 0 PLACES | ± | 0.2 |

DRAFT WHERE APPLICABLE MUST REMAIN WITHIN DIMENSIONS

CURRENT REV DESC: REMOVED OBSOLETED PART NUMBERS AS PER PCN#515932.

EC NO: 812554
DRWN: RAVINR1 2025/01/28
CHK'D: GGA 2025/02/25
APPR: GGA 2025/02/25

INITIAL REVISION:
DRWN: RWATANABE01 2017/11/28
APPR: TKANEKO 2017/12/06

molex

MICRO-LOCK PLUS 1.25 W/B
SINGLE ROW RIGHT ANGLE SMT PLUG ASSEMBLY
GOLD PLATING

PRODUCT CUSTOMER DRAWING

| DOCUMENT NUMBER | DOC TYPE | DOC PART | REVISION |
|---|---|---|---|
| 5055670010-SD | PSD | 000 | D1 |

| THIRD ANGLE PROJECTION | DRAWING | SERIES | MATERIAL NUMBER | CUSTOMER | SHEET NUMBER |
|---|---|---|---|---|---|
| | A3-SIZE | 505567 | SEE TABLE | GENERAL | 5 OF 5 |

| DOCUMENT STATUS | P1 | RELEASE DATE | 2025/02/25 06:03:54 |
|---|---|---|---|

FORMAT: master-ib-prod-A3
REVISION: J1
DATE: 2021/05/01