MATERIALS AND FINISHES:
BODY, CRIMP TUBE: BRASS
PLATED: NICKEL (100µ-in MIN)

JAM NUT : BRASS
PLATED: NICKEL (70µ-in MIN)

CENTER CONTACT: BERYLLIUM COPPER
PLATED: SEE TABLE
OVER NICKEL (100µ-in MIN)

CABLE CONTACT: BRASS
PLATED: GOLD (10µ-in MIN)
OVER NICKEL (100µ-in MIN)

LOCKWASHER: PHOSPHOR BRONZE
PLATED: NICKEL (100µ-in MIN)

INSULATOR, SPACER: PTFE

GASKET: SILICONE RUBBER

SHRINK TUBE: VERSAFIT 3/16-0

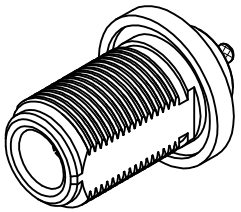

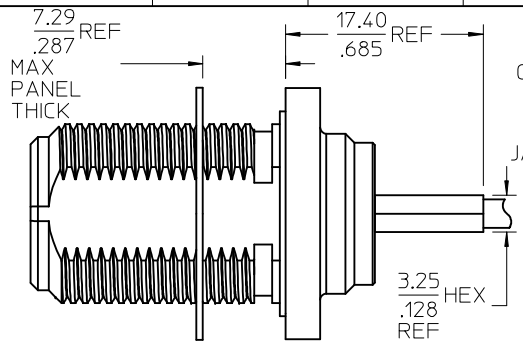

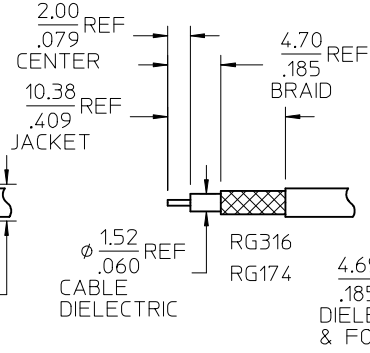

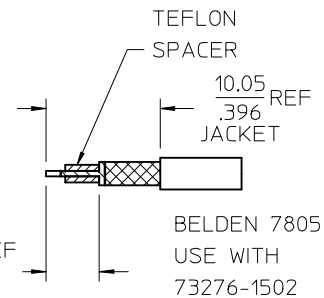

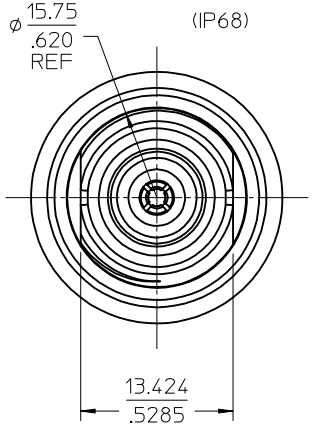

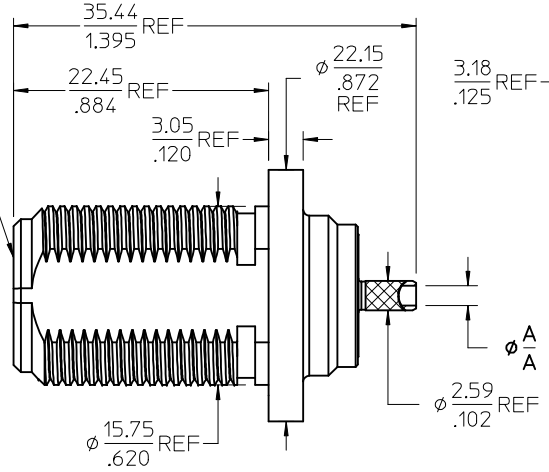

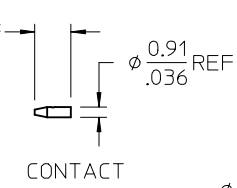

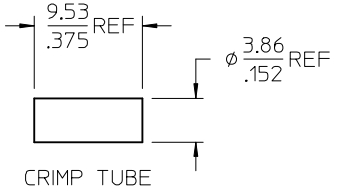

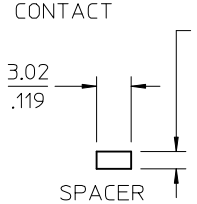

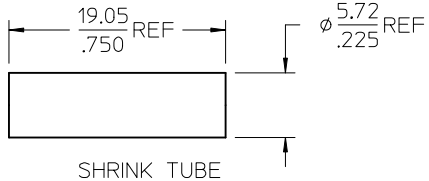

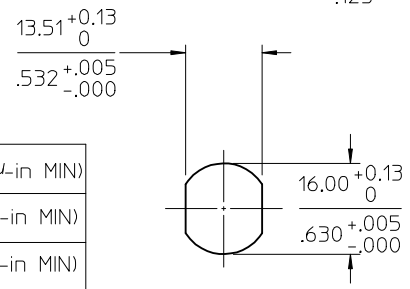

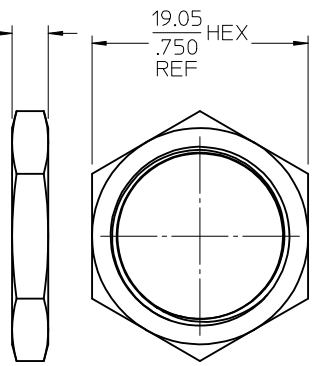

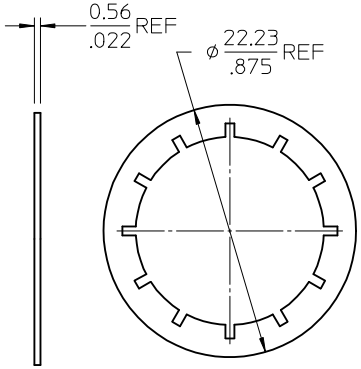

PART NO.	PACKAGING	MM / IN DIM A	CABLE TYPE	CENTER CONTACT FINISH
73276-1502	BULK	1.613 / .0635	BELDEN	GOLD (30µ-in MIN)
73276-1501	ONE PER BAG	1.613 / .0635	RG316	GOLD (10µ-in MIN)
73276-1500	BULK	1.613 / .0635	RG316	GOLD (10µ-in MIN)

SPECIFICATION	DESCRIPTION
MIL-STD-348B, FIG. 304.1	INTERFACE

CHG: UPD VIEWS FOR BODY DESIGN CHANGE
UPD MAT & FINISH NOTES, TABULATED CENTER CONTACT FINISH.
EC NO: URF2016-0824 2016/06/08
DRWN:PSWAM102 2016/06/08
CHKD:BBB
APPR:AROBERTSON 2016/06/23
DESCRIPTION
B2
REV

QUALITY SYMBOLS
▼=0
▽C=0

GENERAL TOLERANCES (UNLESS SPECIFIED)

	mm	INCH
4 PLACES	± ---	± ---
3 PLACES	± ---	± .010
2 PLACES	± 0.25	± ---
1 PLACE	± ---	± ---
ANGULAR ± 2 °		

DRAFT WHERE APPLICABLE MUST REMAIN WITHIN DIMENSIONS

DIMENSION STYLE: MM/IN
SCALE
DESIGN UNITS: INCH
THIRD ANGLE PROJECTION

		DATE
DRAWN BY	SSS	2008/01/15
CHECKED BY	AZR	2008/01/15
APPROVED BY	JDW	2008/01/15

TITLE: N JACK IP68 BLKHD RM RG316 BELDEN 7805 EWR-3517, N-JC/BLK
MOLEX INCORPORATED
MATERIAL NO.: SEE TABLE
DOCUMENT NO.: SD-73276-150
SHEET NO.: 1 OF 1
SIZE C

THIS DRAWING CONTAINS INFORMATION THAT IS PROPRIETARY TO MOLEX INCORPORATED AND SHOULD NOT BE USED WITHOUT WRITTEN PERMISSION