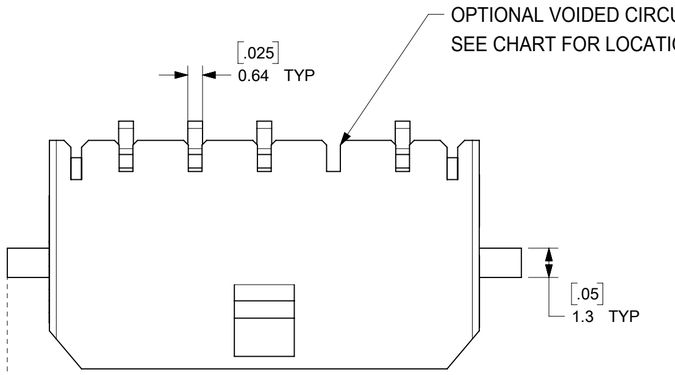

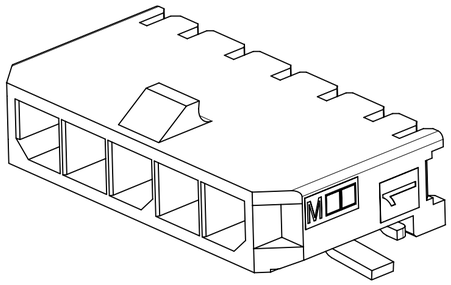

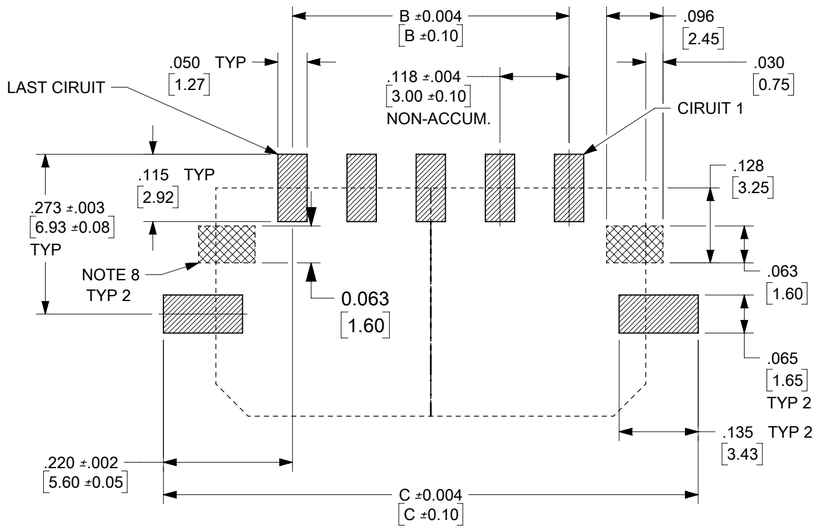

PCB LAYOUT: COMPONENT SIDE

CKTS	A	B	C
2	.380 9.65	.118 3.00	.559 14.20
3	.498 12.65	.236 6.00	.677 17.20
4	.616 15.65	.354 9.00	.795 20.20
5	.734 18.65	.472 12.00	.913 23.20
6	.852 21.65	.591 15.00	1.031 26.20
7	.970 24.65	.709 18.00	1.150 29.20
8	1.089 27.65	.827 21.00	1.268 32.20
9	1.207 30.65	.945 24.00	1.386 35.20
10	1.325 33.65	1.063 27.00	1.504 38.20
11	1.443 36.65	1.181 30.00	1.622 41.20
12	1.561 39.65	1.299 33.00	1.740 44.20

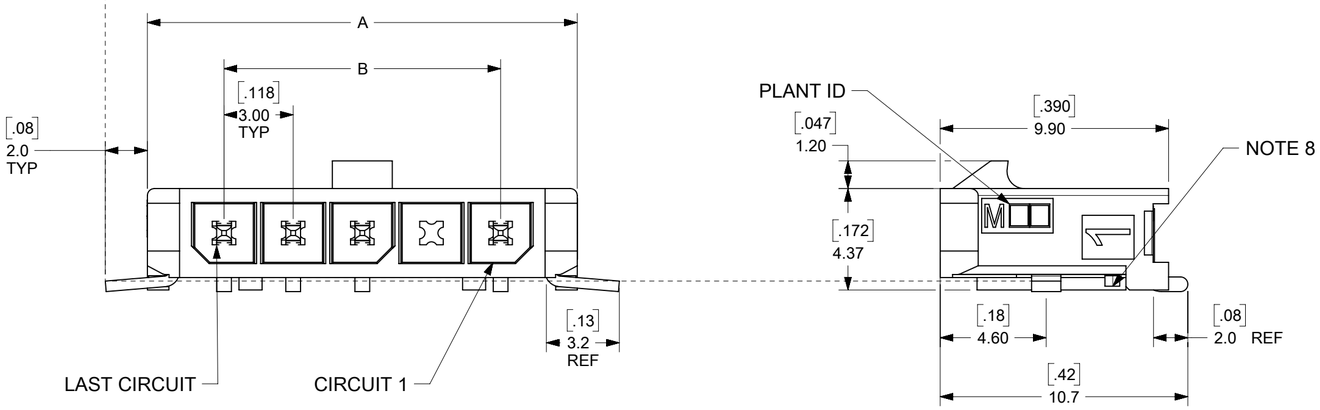

NOTES:

1. HOUSING MATERIAL: LIQUID CRYSTAL POLYMER, GLASS FILLED, UL94V-0, COLOR: BLACK
   TERMINAL MATERAIL: BRASS ALLOY
2. FINISH: A = .000060/(0.00152) MIN. REFLOWED MATTE TIN OVER
   .000050/(0.00127) MIN. NICKEL
   (FINISH IS BRIGHT IN APPEARANCE,
   THICKNESS AS APPLIED PRIOR TO REFLOW)

   B = .000015/(0.00038) MIN. SELECT GOLD IN CONTACT AREA
   .000100/(0.00254) MIN. SELECT MATTE TIN ON SOLDER TAILS
   BOTH OVER .000050/(0.00127) NICKEL OVERALL

   C = .000030/(0.00076) MIN. SELECT GOLD IN CONTACT AREA
   .000100/(0.00254) MIN. SELECT MATTE TIN ON SOLDER TAILS
   BOTH OVER .000050/(0.00127) NICKEL OVERALL
3. PRODUCT SPECIFICATION: PS-43650
4. TAPE & REEL PACKAGED PER MOLEX DRAWING 436500001-PK
5. MATES WITH MICRO FIT (3.0) RECEPTACLE SERIES 43645 & TPA RECEPTACLE 171850
6. THE COPLANARITY DIMENSION IS ESTABLISHED BY PLACING THE ASSEMBLY ON A FLAT SURFACE. THE DISTANCE FROM THAT SURFACE TO THE BOTTOM OF ANY TERMINAL OR NAIL MUST NOT EXCEED .006/0.15
7. TO AVOID INTERFERENCE BETWEEN RECEPTACLE AND PCB.
   MATE WITH SERIES 43645 : HEADER MUST BE PLACED WITHIN .400/(10.16) MAX. FROM EDGE OF PCB
   MATE WITH SERIES 171850 : HEADER MUST BE PLACED WITHIN .197/(5.00) MAX. FROM EDGE OF PCB
   AS SHOWN IN LOCATION DETAIL.
8. METAL TAB MAY BE FLUSH WITH PCB. NO EXPOSED TRACES OR VIAS ALLOWED NEAR THESE AREAS.
9. PARTS CONFORM TO CLASS 'B' REQUIREMENTS OF COSMETIC SPECIFICATION PS-45499-002.
10. TEXT ON PART IS FOR REFERENCE ONLY. TEXT AND TEXT LOCATION MAY VARY DEPENDING ON PART NUMBER AND/OR TOOL.

	FINISH A		FINISH B		FINISH C	
CKTS	MATERIAL NO:	VOID CKT	MATERIAL NO:	VOID CKT	MATERIAL NO:	VOID CKT
02	43650-0212		43650-0213		43650-0214	
03	43650-0312		43650-0313		43650-0314	
04	43650-0412		43650-0413		43650-0414	
05	43650-0512		43650-0513		43650-0514	
06	43650-0612		43650-0613		43650-0614	
07	43650-0712		43650-0713		43650-0714	
08	43650-0812		43650-0813		43650-0814	
09	43650-0912		43650-0913		43650-0914	
10	43650-1012		43650-1013		43650-1014	
11	43650-1112		43650-1113		43650-1114	
12	43650-1212		43650-1213		43650-1214	
03	43650-1312	02			43650-1314	02
04			43650-1413	02		
04			43650-9413	02, 03		

THIS DRAWING CONTAINS INFORMATION THAT IS PROPRIETARY TO MOLEX ELECTRONIC TECHNOLOGIES, LLC AND SHOULD NOT BE USED WITHOUT WRITTEN PERMISSION

DIMENSION UNITS	SCALE
INCH/MM	NTS

GENERAL TOLERANCES (UNLESS SPECIFIED)

	MM	INCH
4 PLACES	±	±
3 PLACES	±	± 0.01
2 PLACES	± 0.25	± 0.014
1 PLACE	± 0.36	±
0 PLACES	±	±
ANGULAR TOL	± 0.5 °	

DRAFT WHERE APPLICABLE MUST REMAIN WITHIN DIMENSIONS

CURRENT REV DESC:

EC NO: 786806
DRWN: ZIXUAQ 2024/05/21
CHK'D: XQZHANG 2025/01/13
APPR: XQZHANG 2025/01/13

INITIAL REVISION:
DRWN: SAMIEC 2000/07/07
APPR: FSMITH 2016/03/18

molex

MICRO FIT (3.0) RIGHT ANGLE SMT NAILS
SINGLE ROW / TAPE AND REEL

PRODUCT CUSTOMER DRAWING

DOCUMENT NUMBER	DOC TYPE	DOC PART	REVISION
SD-43650-005	PSD	001	E9

THIRD ANGLE PROJECTION	DRAWING	SERIES	MATERIAL NUMBER	CUSTOMER	SHEET NUMBER
	C-SIZE	43650	SEE CHART	GENERAL MARKET	1 OF 2

DOCUMENT STATUS	P1	RELEASE DATE	2025/01/13 08:31:27

FORMAT: Eng-lega-master-tb-prod-C
REVISION: E1
DATE: 2021/05/01

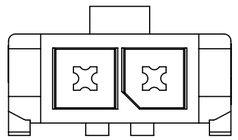

2 CKT

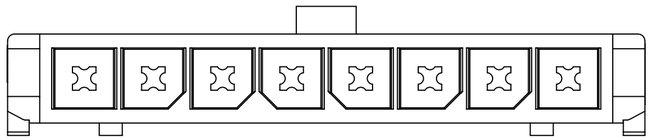

8 CKT

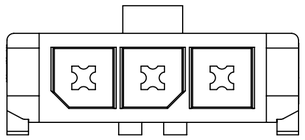

3 CKT

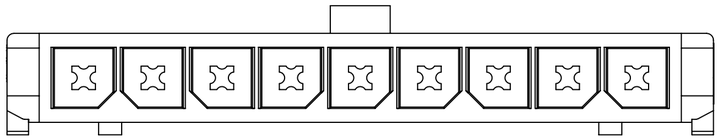

9 CKT

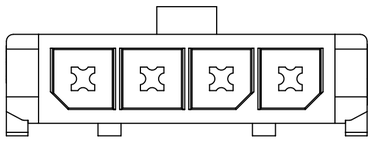

4 CKT

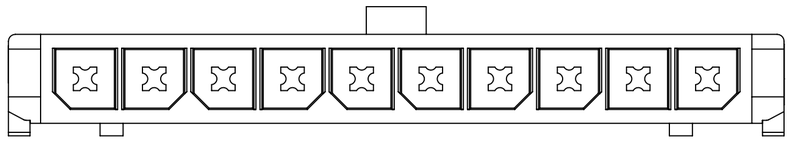

10 CKT

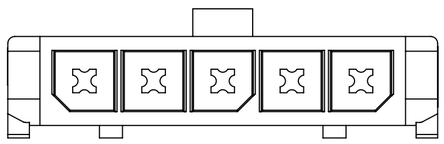

5 CKT

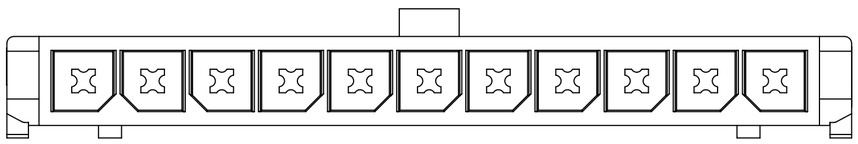

11 CKT

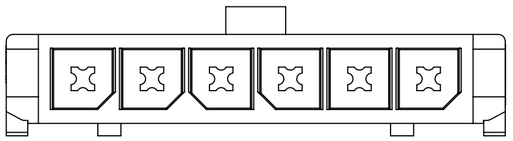

6 CKT

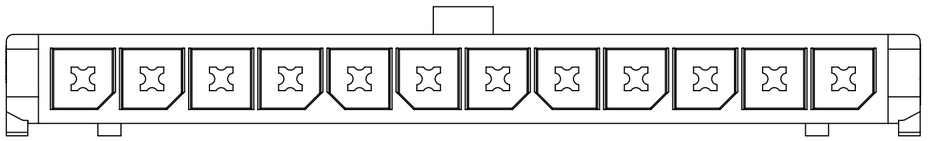

12 CKT

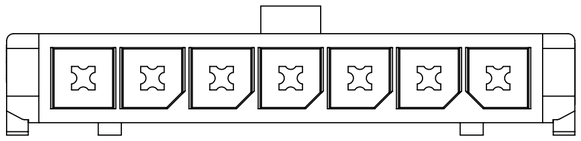

7 CKT

POLARIZATION DETAIL

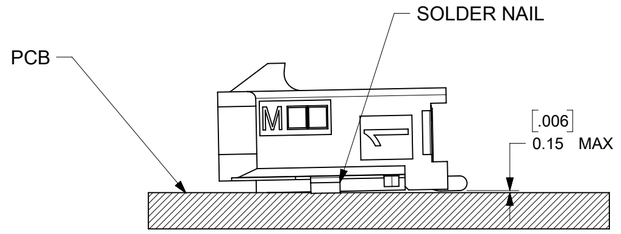

COPLANARITY DETAIL
SEE NOTE 6

MATE WITH TPA RECEPTALCEL
SERIES 171850

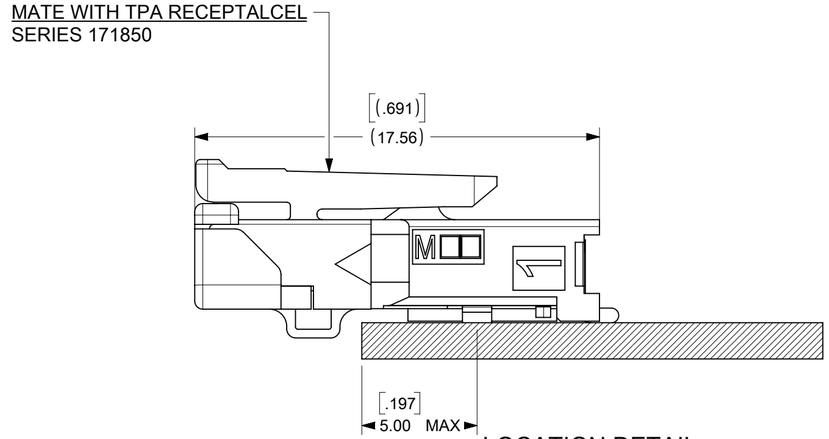

LOCATION DETAIL
SEE NOTE 7

MATE WITH STANDARD RECEPTALCEL
SERIES 43645

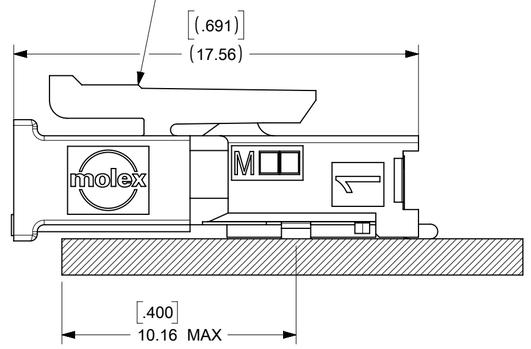

LOCATION DETAIL
SEE NOTE 7

THIS DRAWING CONTAINS INFORMATION THAT IS PROPRIETARY TO MOLEX ELECTRONIC TECHNOLOGIES, LLC AND SHOULD NOT BE USED WITHOUT WRITTEN PERMISSION

DIMENSION UNITS	SCALE
INCH/MM	NTS

GENERAL TOLERANCES (UNLESS SPECIFIED)

	MM	INCH
4 PLACES	±	±
3 PLACES	±	± 0.01
2 PLACES	± 0.25	± 0.014
1 PLACE	± 0.36	±
0 PLACES	±	±
ANGULAR TOL	± 0.5 °	

DRAFT WHERE APPLICABLE MUST REMAIN WITHIN DIMENSIONS

CURRENT REV DESC:

EC NO: 786806
DRWN: ZIXUAQ 2024/05/21
CHK'D: XQZHANG 2025/01/13
APPR: XQZHANG 2025/01/13

INITIAL REVISION:
DRWN: SAMIEC 2000/07/07
APPR: FSMITH 2016/03/18

molex

MICRO FIT (3.0) RIGHT ANGLE SMT NAILS
SINGLE ROW / TAPE AND REEL

PRODUCT CUSTOMER DRAWING

DOCUMENT NUMBER	DOC TYPE	DOC PART	REVISION
SD-43650-005	PSD	001	E9

THIRD ANGLE PROJECTION	DRAWING	SERIES	MATERIAL NUMBER	CUSTOMER	SHEET NUMBER
	C-SIZE	43650	SEE CHART	GENERAL MARKET	2 OF 2

DOCUMENT STATUS	P1	RELEASE DATE	2025/01/13 08:31:27

FORMAT: Eng-lega-master-lb-prod-C
REVISION: E1
DATE: 2021/05/01