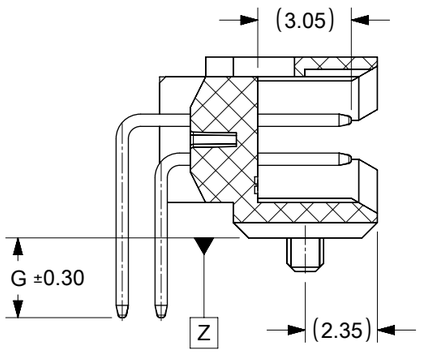

SECTION A-A

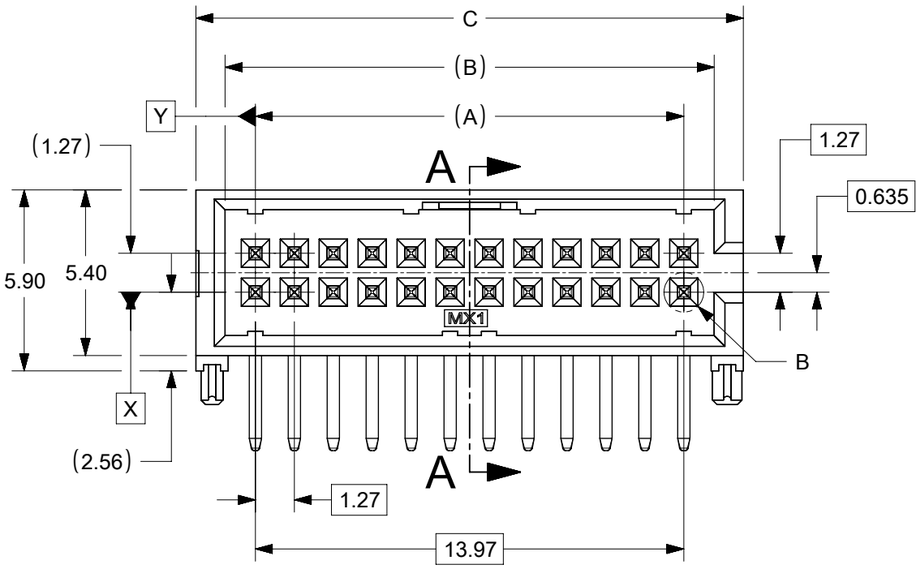

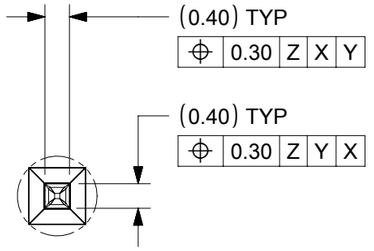

DETAIL B
SCALE 10:1

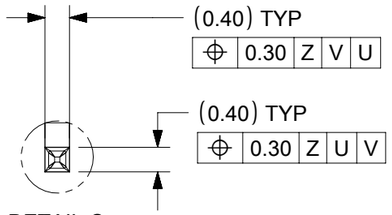

DETAIL C
SCALE 10:1

CKT SIZE	DIMENSION					
	A	B	C	D	E	F
4	1.27	3.25	5.15	4.10	3.05	3.04
6	2.54	4.52	6.42	5.37	4.32	4.31
8	3.81	5.79	7.69	6.64	5.59	5.58
10	5.08	7.06	8.96	7.91	6.86	6.85
12	6.35	8.33	10.23	9.18	8.13	8.12
14	7.62	9.60	11.50	10.45	9.40	9.39
16	8.89	10.87	12.77	11.72	10.67	10.66
18	10.16	12.14	14.04	12.99	11.94	11.93
20	11.43	13.41	15.31	14.26	13.21	13.20
22	12.70	14.68	16.58	15.53	14.48	14.47
24	13.97	15.95	17.85	16.80	15.75	15.74

TAIL LENGTH DIMENSION G	RECOMMENDED BOARD THICKNESS (TOLERANCE) ± 0.10)
1.60	1.60
2.40	2.40
3.00	3.00

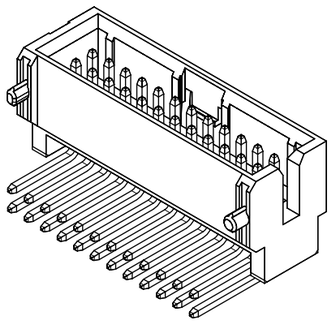

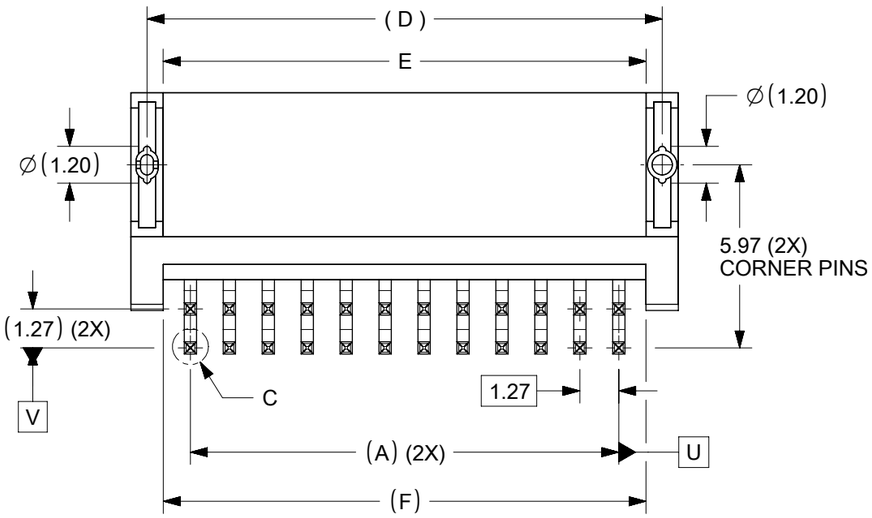

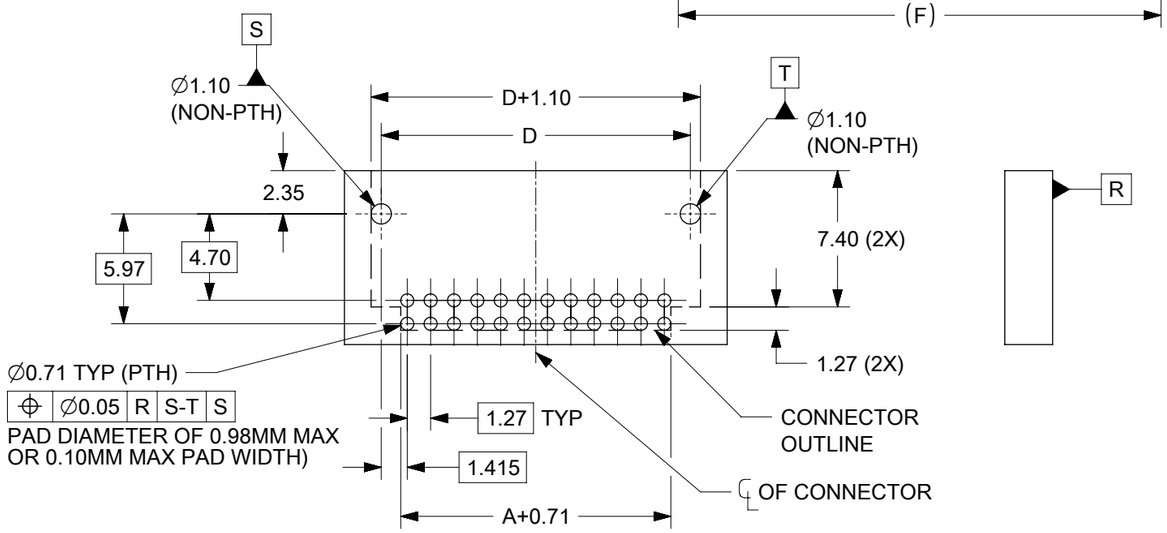

RECOMMENDED PCB LAYOUT
TOLERANCE ±0.05

NOTES:
1. FOR ILLUSTRATION PURPOSES, 24 CIRCUIT SIZE WAFER IS SHOWN.
2. MATERIAL :
   HOUSING : LCP, GLASS-FILLED, UL94V-0, BLACK
   BANDOLIER PIN : 0.40MM SQ. COPPER ALLOY
3. FINISHES: SEE SHEET 2
4. PRODUCT SPECIFICATION: 2009890001 (PS)
5. PACKAGING SPECIFICATION: 2010210001 (PK)
6. REFER TO SHEET 2 FOR PART OPTIONS AND PART NUMBER.
7. MATES WITH: 78120 SERIES
8. POSITIONING TO BE CONTROLLED BASED ON PIN TIP
9. PARTS CONFORMS TO CLASS "B" REQUIREMENT OF COSMETIC SPECIFICATION PS-45499-002
10. MOLEX LOGO AND CAVITY LOCATED AS SHOWN.
11. NON-FUNCTIONAL CORING IS SUBJECTED TO CHANGES WITHOUT NOTICE.

THIS DRAWING CONTAINS INFORMATION THAT IS PROPRIETARY TO MOLEX ELECTRONIC TECHNOLOGIES, LLC AND SHOULD NOT BE USED WITHOUT WRITTEN PERMISSION

DIMENSION UNITS	mm
SCALE	NTS
GENERAL TOLERANCES (UNLESS SPECIFIED)	
ANGULAR TOL	± 3.0 °
4 PLACES	±
3 PLACES	±
2 PLACES	± 0.2
1 PLACE	±
0 PLACES	±
DRAFT WHERE APPLICABLE MUST REMAIN WITHIN DIMENSIONS	

CURRENT REV DESC: REMASTERED & BTB DISTANCE UPDATE

EC NO: 664214
DRWN: KSUTAR 2021/05/10
CHK'D: ABABUPS 2021/05/18
APPR: MRAMAKRISHNA 2021/05/18

INITIAL REVISION:
DRWN: SCHEONG 2016/02/22
APPR: KHLIM 2016/11/24

molex

1.27MM PITCH SLIM-GRID
RIGHT-ANGLE THROUGH HOLE SHROUDED HEADER

PRODUCT CUSTOMER DRAWING

THIRD ANGLE PROJECTION	DRAWING	SERIES	MATERIAL NUMBER	CUSTOMER	SHEET NUMBER
	A3-SIZE	201021	SEE TABLE	GENERAL MARKET	1 OF 4

DOCUMENT NUMBER	DOC TYPE	DOC PART	REVISION
2010210024	PSD	000	A3

DOCUMENT STATUS	P1	RELEASE DATE	2021/05/18 14:42:59

FORMAT: master_sheet-A3
REVISION: J
DATE: 2020/01/14

LEGEND

201021 - X X X X

CKT SIZE & PEG OPTION
(NO PEG) 04 = 4 CKTS ... 24 = 24 CKTS
(WITH PEG) 54 = 4 CKTS ... 74 = 24 CKTS

FINISHES
0 = 0.05um Au MIN. GOLD ON CONTACT AND 2.00um MIN. MATTE TIN ON SOLDERTAIL OVER 1.27um MIN. NICKEL UNDERPLATE OVERALL 1 = 0.38um Au MIN. GOLD ON CONTACT AND 2.00um MIN. MATTE TIN ON SOLDERTAIL OVER 1.27um MIN. NICKEL UNDERPLATE OVERALL 2 = 0.76um Au MIN. GOLD ON CONTACT AND 2.00um MIN. MATTE TIN ON SOLDERTAIL OVER 1.27um MIN. NICKEL UNDERPLATE OVERALL

PACKAGING & KAPTON TAPE OPTION
TUBE & WITHOUT KAPTON TAPE 0 = 1.60 P.TAIL LENGTH 1 = 2.40 P.TAIL LENGTH 2 = 3.00 P.TAIL LENGTH
TUBE & WITH KAPTON TAPE 3 = 1.60 P.TAIL LENGTH 4 = 2.40 P.TAIL LENGTH 5 = 3.00 P.TAIL LENGTH
TAPE & REEL WITH KAPTON TAPE (NOT TOOLED) 6 = 1.60 P.TAIL LENGTH 7 = 2.40 P.TAIL LENGTH 8 = 3.00 P.TAIL LENGTH

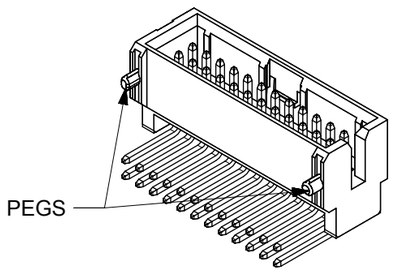

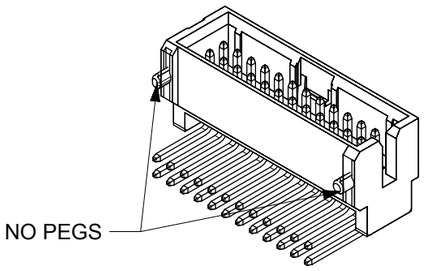

THIS DRAWING CONTAINS INFORMATION THAT IS PROPRIETARY TO MOLEX ELECTRONIC TECHNOLOGIES, LLC AND SHOULD NOT BE USED WITHOUT WRITTEN PERMISSION

DIMENSION UNITS	SCALE
mm	NTS

GENERAL TOLERANCES (UNLESS SPECIFIED)

ANGULAR TOL	± 3.0 °
4 PLACES	±
3 PLACES	±
2 PLACES	± 0.2
1 PLACE	±
0 PLACES	±

DRAFT WHERE APPLICABLE MUST REMAIN WITHIN DIMENSIONS

CURRENT REV DESC: REMASTERED & BTB DISTANCE UPDATE

EC NO: 664214

DRWN:	KSUTAR	2021/05/10
CHK'D:	ABABUPS	2021/05/18
APPR:	MRAMAKRISHNA	2021/05/18

INITIAL REVISION:

DRWN:	SCHEONG	2016/02/22
APPR:	KHLIM	2016/11/24

molex

1.27MM PITCH SLIM-GRID
RIGHT-ANGLE THROUGH HOLE SHROUDED HEADER

PRODUCT CUSTOMER DRAWING

DOCUMENT NUMBER	DOC TYPE	DOC PART	REVISION
2010210024	PSD	000	A3

THIRD ANGLE PROJECTION	DRAWING	SERIES	MATERIAL NUMBER	CUSTOMER	SHEET NUMBER
	A3-SIZE	201021	SEE TABLE	GENERAL MARKET	2 OF 4

DOCUMENT STATUS	P1	RELEASE DATE	2021/05/18 14:42:59

FORMAT: master_sheet-A3
REVISION: J
DATE: 2020/01/14

CKT SIZE	PIN TAIL LENGTH, G = 1.60				PIN TAIL LENGTH, G = 2.40				PIN TAIL LENGTH, G = 3.00			
	ASSEMBLY NO PEG & NO KAPTON TAPE P/N	ASSEMBLY NO PEG & WITH KAPTON TAPE P/N	ASSEMBLY WITH PEG & NO KAPTON TAPE P/N	ASSEMBLY WITH PEG & WITH KAPTON TAPE P/N	ASSEMBLY NO PEG & NO KAPTON TAPE P/N	ASSEMBLY NO PEG & WITH KAPTON TAPE P/N	ASSEMBLY WITH PEG & NO KAPTON TAPE P/N	ASSEMBLY WITH PEG & WITH KAPTON TAPE P/N	ASSEMBLY NO PEG & NO KAPTON TAPE P/N	ASSEMBLY NO PEG & WITH KAPTON TAPE P/N	ASSEMBLY WITH PEG & NO KAPTON TAPE P/N	ASSEMBLY WITH PEG & WITH KAPTON TAPE P/N
4	201021-0004	201021-3004	201021-0054	201021-3054	201021-1004	201021-4004	201021-1054	201021-4054	201021-2004	201021-5004	201021-2054	201021-5054
	201021-0104	201021-3104	201021-0154	201021-3154	201021-1104	201021-4104	201021-1154	201021-4154	201021-2104	201021-5104	201021-2154	201021-5154
	201021-0204	201021-3204	201021-0254	201021-3254	201021-1204	201021-4204	201021-1254	201021-4254	201021-2204	201021-5204	201021-2254	201021-5254
6	201021-0006	201021-3006	201021-0056	201021-3056	201021-1006	201021-4006	201021-1056	201021-4056	201021-2006	201021-5006	201021-2056	201021-5056
	201021-0106	201021-3106	201021-0156	201021-3156	201021-1106	201021-4106	201021-1156	201021-4156	201021-2106	201021-5106	201021-2156	201021-5156
	201021-0206	201021-3206	201021-0256	201021-3256	201021-1206	201021-4206	201021-1256	201021-4256	201021-2206	201021-5206	201021-2256	201021-5256
8	201021-0008	201021-3008	201021-0058	201021-3058	201021-1008	201021-4008	201021-1058	201021-4058	201021-2008	201021-5008	201021-2058	201021-5058
	201021-0108	201021-3108	201021-0158	201021-3158	201021-1108	201021-4108	201021-1158	201021-4158	201021-2108	201021-5108	201021-2158	201021-5158
	201021-0208	201021-3208	201021-0258	201021-3258	201021-1208	201021-4208	201021-1258	201021-4258	201021-2208	201021-5208	201021-2258	201021-5258
10	201021-0010	201021-3010	201021-0060	201021-3060	201021-1010	201021-4010	201021-1060	201021-4060	201021-2010	201021-5010	201021-2060	201021-5060
	201021-0110	201021-3110	201021-0160	201021-3160	201021-1110	201021-4110	201021-1160	201021-4160	201021-2110	201021-5110	201021-2160	201021-5160
	201021-0210	201021-3210	201021-0260	201021-3260	201021-1210	201021-4210	201021-1260	201021-4260	201021-2210	201021-5210	201021-2260	201021-5260
12	201021-0012	201021-3012	201021-0062	201021-3062	201021-1012	201021-4012	201021-1062	201021-4062	201021-2012	201021-5012	201021-2062	201021-5062
	201021-0112	201021-3112	201021-0162	201021-3162	201021-1112	201021-4112	201021-1162	201021-4162	201021-2112	201021-5112	201021-2162	201021-5162
	201021-0212	201021-3212	201021-0262	201021-3262	201021-1212	201021-4212	201021-1262	201021-4262	201021-2212	201021-5212	201021-2262	201021-5262
14	201021-0014	201021-3014	201021-0064	201021-3064	201021-1014	201021-4014	201021-1064	201021-4064	201021-2014	201021-5014	201021-2064	201021-5064
	201021-0114	201021-3114	201021-0164	201021-3164	201021-1114	201021-4114	201021-1164	201021-4164	201021-2114	201021-5114	201021-2164	201021-5164
	201021-0214	201021-3214	201021-0264	201021-3264	201021-1214	201021-4214	201021-1264	201021-4264	201021-2214	201021-5214	201021-2264	201021-5264
16	201021-0016	201021-3016	201021-0066	201021-3066	201021-1016	201021-4016	201021-1066	201021-4066	201021-2016	201021-5016	201021-2066	201021-5066
	201021-0116	201021-3116	201021-0166	201021-3166	201021-1116	201021-4116	201021-1166	201021-4166	201021-2116	201021-5116	201021-2166	201021-5166
	201021-0216	201021-3216	201021-0266	201021-3266	201021-1216	201021-4216	201021-1266	201021-4266	201021-2216	201021-5216	201021-2266	201021-5266
18	201021-0018	201021-3018	201021-0068	201021-3068	201021-1018	201021-4018	201021-1068	201021-4068	201021-2018	201021-5018	201021-2068	201021-5068
	201021-0118	201021-3118	201021-0168	201021-3168	201021-1118	201021-4118	201021-1168	201021-4168	201021-2118	201021-5118	201021-2168	201021-5168
	201021-0218	201021-3218	201021-0268	201021-3268	201021-1218	201021-4218	201021-1268	201021-4268	201021-2218	201021-5218	201021-2268	201021-5268
20	201021-0020	201021-3020	201021-0070	201021-3070	201021-1020	201021-4020	201021-1070	201021-4070	201021-2020	201021-5020	201021-2070	201021-5070
	201021-0120	201021-3120	201021-0170	201021-3170	201021-1120	201021-4120	201021-1170	201021-4170	201021-2120	201021-5120	201021-2170	201021-5170
	201021-0220	201021-3220	201021-0270	201021-3270	201021-1220	201021-4220	201021-1270	201021-4270	201021-2220	201021-5220	201021-2270	201021-5270
22	201021-0022	201021-3022	201021-0072	201021-3072	201021-1022	201021-4022	201021-1072	201021-4072	201021-2022	201021-5022	201021-2072	201021-5072
	201021-0122	201021-3122	201021-0172	201021-3172	201021-1122	201021-4122	201021-1172	201021-4172	201021-2122	201021-5122	201021-2172	201021-5172
	201021-0222	201021-3222	201021-0272	201021-3272	201021-1222	201021-4222	201021-1272	201021-4272	201021-2222	201021-5222	201021-2272	201021-5272
24	201021-0024	201021-3024	201021-0074	201021-3074	201021-1024	201021-4024	201021-1074	201021-4074	201021-2024	201021-5024	201021-2074	201021-5074
	201021-0124	201021-3124	201021-0174	201021-3174	201021-1124	201021-4124	201021-1174	201021-4174	201021-2124	201021-5124	201021-2174	201021-5174
	201021-0224	201021-3224	201021-0274	201021-3274	201021-1224	201021-4224	201021-1274	201021-4274	201021-2224	201021-5224	201021-2274	201021-5274

THIS DRAWING CONTAINS INFORMATION THAT IS PROPRIETARY TO MOLEX ELECTRONIC TECHNOLOGIES, LLC AND SHOULD NOT BE USED WITHOUT WRITTEN PERMISSION

DIMENSION UNITS	mm
SCALE	NTS
GENERAL TOLERANCES (UNLESS SPECIFIED)	
ANGULAR TOL ±	3.0 °
4 PLACES ±	
3 PLACES ±	
2 PLACES ±	0.2
1 PLACE ±	
0 PLACES ±	
DRAFT WHERE APPLICABLE MUST REMAIN WITHIN DIMENSIONS	

CURRENT REV DESC: REMASTERED & BTB DISTANCE UPDATE

EC NO: 664214
DRWN: KSUTAR 2021/05/10
CHK'D: ABABUPS 2021/05/18
APPR: MRAMAKRISHNA 2021/05/18

INITIAL REVISION:
DRWN: SCHEONG 2016/02/22
APPR: KHLIM 2016/11/24

molex

1.27MM PITCH SLIM-GRID
RIGHT-ANGLE THROUGH HOLE SHROUDED HEADER

PRODUCT CUSTOMER DRAWING

DOCUMENT NUMBER	DOC TYPE	DOC PART	REVISION
2010210024	PSD	000	A3

THIRD ANGLE PROJECTION	DRAWING	SERIES	MATERIAL NUMBER	CUSTOMER	SHEET NUMBER
	A3-SIZE	201021	SEE TABLE	GENERAL MARKET	3 OF 4

DOCUMENT STATUS	P1	RELEASE DATE	2021/05/18 14:42:59

FORMAT: master_dwg_A3
REVISION: J1
DATE: 2020/01/16

BOARD TO BOARD (BTB) DISTANCE

HEADER	MATES WITH (RECEPTACLE)	BTB DIST.	PICTORIAL VIEW
201021	78120	9.23	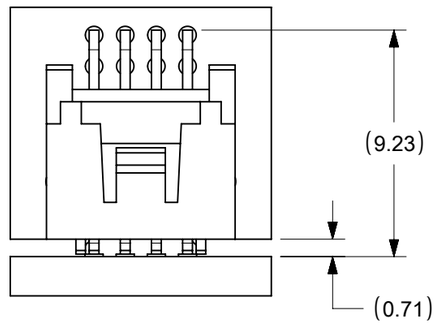

THIS DRAWING CONTAINS INFORMATION THAT IS PROPRIETARY TO MOLEX ELECTRONIC TECHNOLOGIES, LLC AND SHOULD NOT BE USED WITHOUT WRITTEN PERMISSION

DIMENSION UNITS	SCALE
mm	NTS

GENERAL TOLERANCES (UNLESS SPECIFIED)

ANGULAR TOL	± 3.0 °
4 PLACES	±
3 PLACES	±
2 PLACES	± 0.2
1 PLACE	±
0 PLACES	±

DRAFT WHERE APPLICABLE MUST REMAIN WITHIN DIMENSIONS

CURRENT REV DESC: REMASTERED & BTB DISTANCE UPDATE

EC NO: 664214

DRWN:	KSUTAR	2021/05/10
CHK'D:	ABABUPS	2021/05/18
APPR:	MRAMAKRISHNA	2021/05/18

INITIAL REVISION:

DRWN:	SCHEONG	2016/02/22
APPR:	KHLIM	2016/11/24

molex

1.27MM PITCH SLIM-GRID
RIGHT-ANGLE THROUGH HOLE SHROUDED HEADER

PRODUCT CUSTOMER DRAWING

DOCUMENT NUMBER	DOC TYPE	DOC PART	REVISION
2010210024	PSD	000	A3

THIRD ANGLE PROJECTION	DRAWING	SERIES	MATERIAL NUMBER	CUSTOMER	SHEET NUMBER
	A3-SIZE	201021	SEE TABLE	GENERAL MARKET	4 OF 4

DOCUMENT STATUS	P1	RELEASE DATE	2021/05/18 14:42:59

FORMAT: master_Sheet-A3
REVISION: J
DATE: 2020/01/1