MATERIAL AND FINISHES

BODY BRASS
PLATED SEE TABLE

CENTER CONTACT BERYLLIUM COPPER
PLATED SEE TABLE

PCB CONTACT BRASS
PLATED SEE TABLE

INSULATOR TEFLON

NOTE:

1. EXCEPTION TO PRODUCT SPECIFICATION
   FREQUENCY RANGE: DC TO 12GHZ

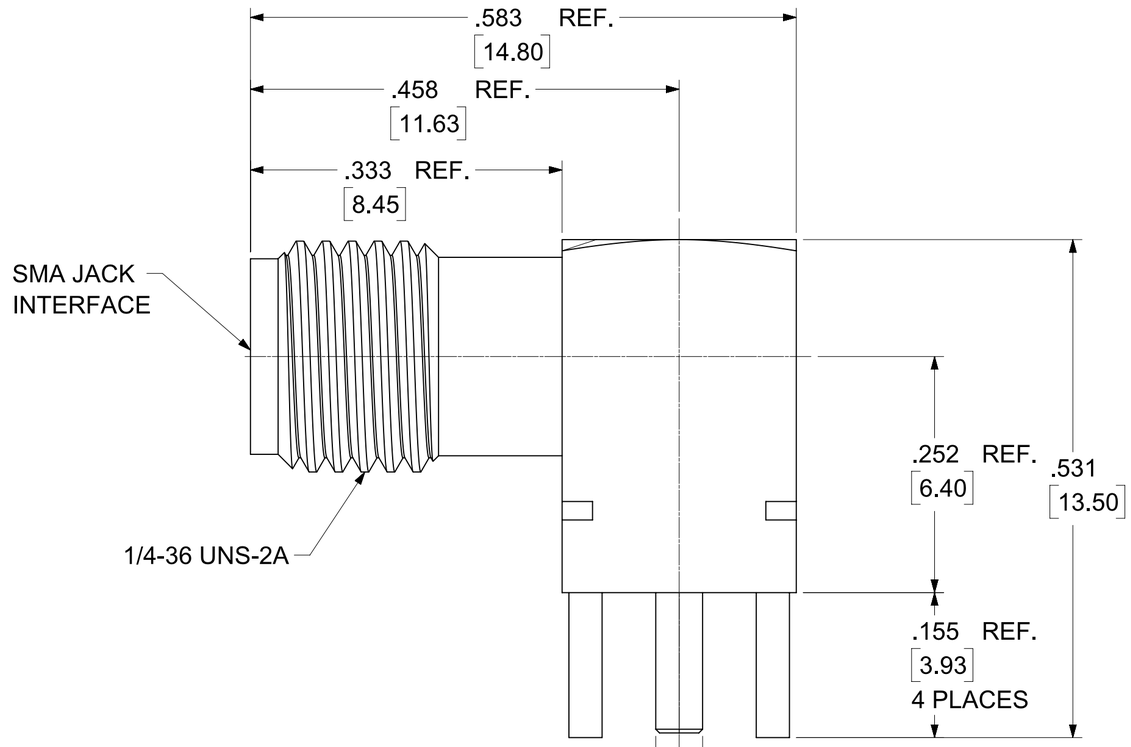

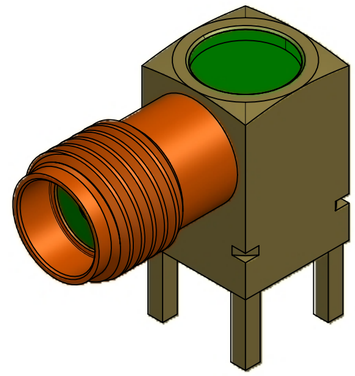

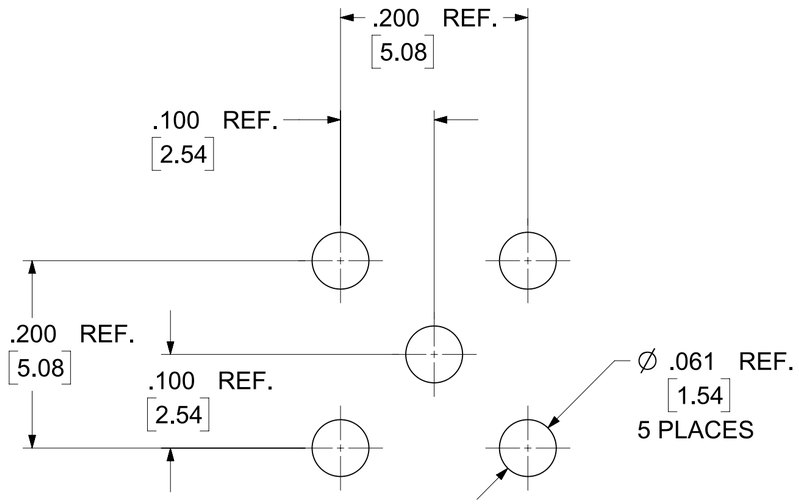

RECOMMENDED PCB LAYOUT

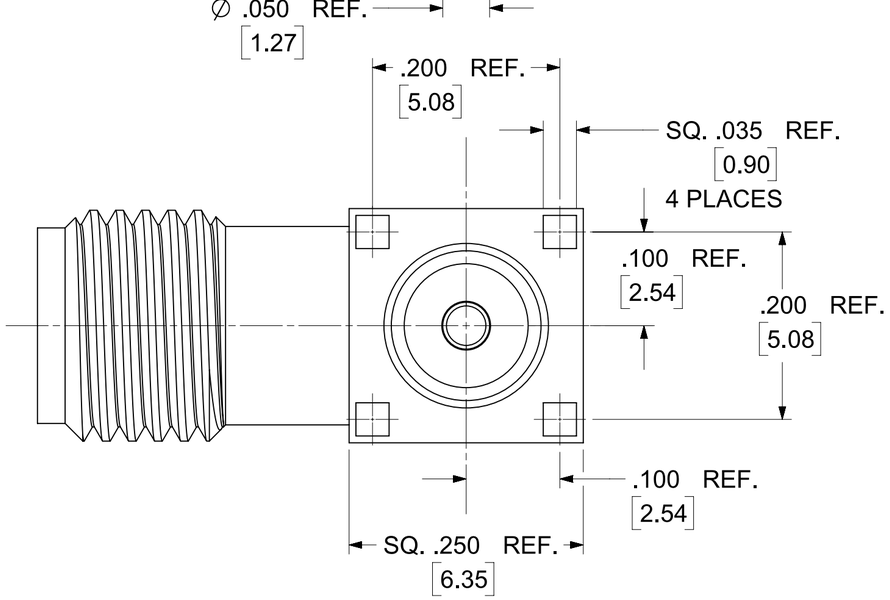

PART NO.	BODY PLATING	CENTER CONTACT PLATING	PCB CONTACT PLATING	PACKAGING TYPE	PACKAGING Q'TY IN CARTON (DU/MLQ)
73251-3133	NICKEL	GOLD FLASH	GOLD FLASH	TRAY (80 CAVITY.)	1760 PCS
73251-3131	NICKEL	GOLD 10u"	GOLD 10u"	P/N: 73100-0115 PLACES IN A SINGLE BAG	1000 PCS
73100-0115	NICKEL	GOLD 10u"	GOLD 10u"	TRAY (80 CAVITY.)	3520 PCS

SPECIFICATION	DESCRIPTION
PS-89675-368	SOLDER PROFILE SPEC.
PS-89675-3460	PEODUCT SPECIFICATION

THIS DRAWING CONTAINS INFORMATION THAT IS PROPRIETARY TO MOLEX ELECTRONIC TECHNOLOGIES, LLC AND SHOULD NOT BE USED WITHOUT WRITTEN PERMISSION

FUNCTIONAL SYMBOLS
FA = 0
FC = 0
FD = 0

DIVISIONAL SYMBOLS

DIMENSION UNITS: INCH/MM
SCALE: NTS

GENERAL TOLERANCES (UNLESS SPECIFIED)
ANGULAR TOL ± 2°
4 PLACES ±
3 PLACES ±
2 PLACES ±
1 PLACE ±
0 PLACES ±

DRAFT WHERE APPLICABLE MUST REMAIN WITHIN DIMENSIONS

CURRENT REV DESC: EWR-15712-A: ADDED 73251-3133 PART NO, ADDED SOLDER PROFILE SPEC

STATUS: Production
DRWN: JasonYS Su 2024-11-08
CHK'D: Darry Cheng 2025-02-25
APPR: Darry Cheng 2025-02-25

THIRD ANGLE PROJECTION
DRAWING: C-SIZE
SERIES: 73100

molex

SMA JACK,R/A PCB,50 OHMS
PLATED NICKEL, SMA-J/PCB EWR # 13330

PRODUCT CUSTOMER DRAWING

DOCUMENT NUMBER	DOC TYPE	DOC PART	REVISION
SD-73100-0115	PSD	001	B7

MATERIAL NUMBER	CUSTOMER	SHEET NUMBER
SEE TABLE	GENERAL MARKET	1 OF 4

FORMAT TC-tb-prod-C
REVISION: B
DATE: 2022/08/01



P/N: 73100-0115

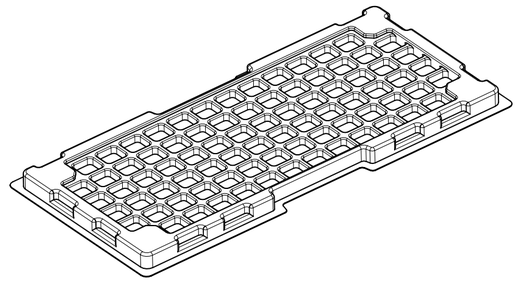

80 SETS PER TRAY
P/N: 89707-0190

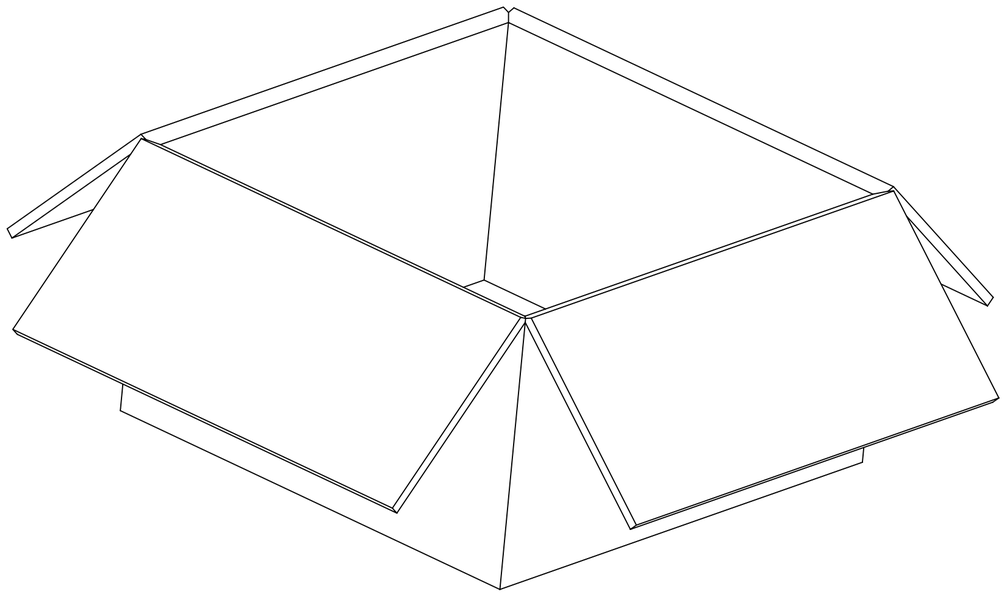

3520 SETS PER OUTER
CARTON BOX
P/N: 96708-0005

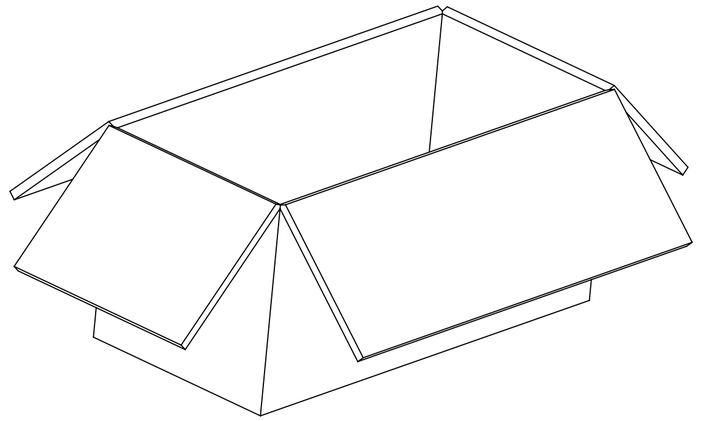

1760 SETS PER INNER
CARTON BOX
P/N: 96707-0001

FUNCTIONAL SYMBOLS	THIS DRAWING CONTAINS INFORMATION THAT IS PROPRIETARY TO MOLEX ELECTRONIC TECHNOLOGIES, LLC AND SHOULD NOT BE USED WITHOUT WRITTEN PERMISSION				
FA = 0	DIMENSION UNITS: INCH/MM	SCALE: NTS	CURRENT REV DESC: EWR-15712-A: ADDED 73251-3133 PART NO, ADDED SOLDER PROFILE SPEC	molex	
FC = 0	GENERAL TOLERANCES (UNLESS SPECIFIED)			SMA JACK,R/A PCB,50 OHMS PLATED NICKEL, SMA-J/PCB EWR # 13330	
FP = 0	ANGULAR TOL ± 2°			PRODUCT CUSTOMER DRAWING	
DIVISIONAL SYMBOLS	4 PLACES ±		STATUS: Production	DOCUMENT NUMBER: SD-73100-0115	DOC TYPE: PSD / DOC PART: 001 / REVISION: B7
	3 PLACES ±		DRWN: JasonYS Su 2024-11-08		
	2 PLACES ±		CHK'D: Darry Cheng 2025-02-25		
	1 PLACE ±		APPR: Darry Cheng 2025-02-25		
	0 PLACES ±				
	DRAFT WHERE APPLICABLE MUST REMAIN WITHIN DIMENSIONS	THIRD ANGLE PROJECTION	DRAWING: C-SIZE / SERIES: 73100	MATERIAL NUMBER	CUSTOMER: GENERAL MARKET / SHEET NUMBER: 2 OF 4



P/N: 73251-3131

1 SET PER POLYBAG
P/N: 89707-0317

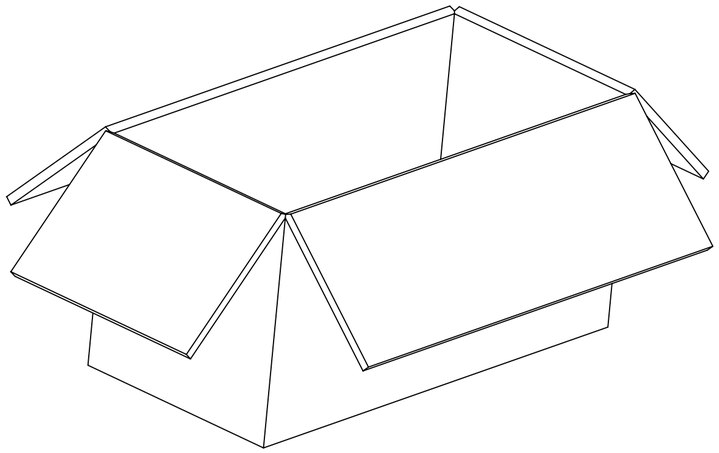

1000 SETS PER OUTER
CARTON BOX
P/N: 96707-0002

50 SETS PER POLYBAG
P/N: 89707-0174

FUNCTIONAL SYMBOLS	THIS DRAWING CONTAINS INFORMATION THAT IS PROPRIETARY TO MOLEX ELECTRONIC TECHNOLOGIES, LLC AND SHOULD NOT BE USED WITHOUT WRITTEN PERMISSION				
FA = 0	DIMENSION UNITS: INCH/MM	SCALE: NTS	CURRENT REV DESC: EWR-15712-A: ADDED 73251-3133 PART NO, ADDED SOLDER PROFILE SPEC	molex	
FC = 0	GENERAL TOLERANCES (UNLESS SPECIFIED)			SMA JACK,R/A PCB,50 OHMS PLATED NICKEL, SMA-J/PCB EWR # 13330	
FP = 0	ANGULAR TOL ± 2°			PRODUCT CUSTOMER DRAWING	
	4 PLACES ±		STATUS: Production	DOCUMENT NUMBER: SD-73100-0115	DOC TYPE: PSD / DOC PART: 001 / REVISION: B7
DIVISIONAL SYMBOLS	3 PLACES ±		DRWN: JasonYS Su 2024-11-08		
	2 PLACES ±		CHK'D: Darry Cheng 2025-02-25		
	1 PLACE ±		APPR: Darry Cheng 2025-02-25		
	0 PLACES ±				
	DRAFT WHERE APPLICABLE MUST REMAIN WITHIN DIMENSIONS	THIRD ANGLE PROJECTION	DRAWING: C-SIZE / SERIES: 73100	MATERIAL NUMBER	CUSTOMER: GENERAL MARKET / SHEET NUMBER: 3 OF 4



P/N: 73251-3133

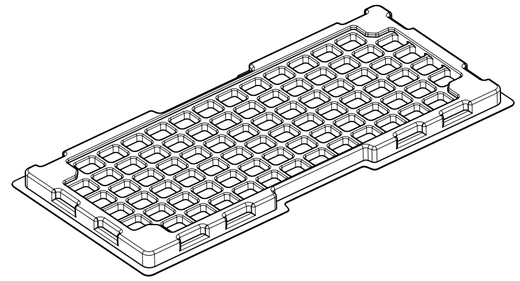

80 SETS PER TRAY
P/N: 89707-0190

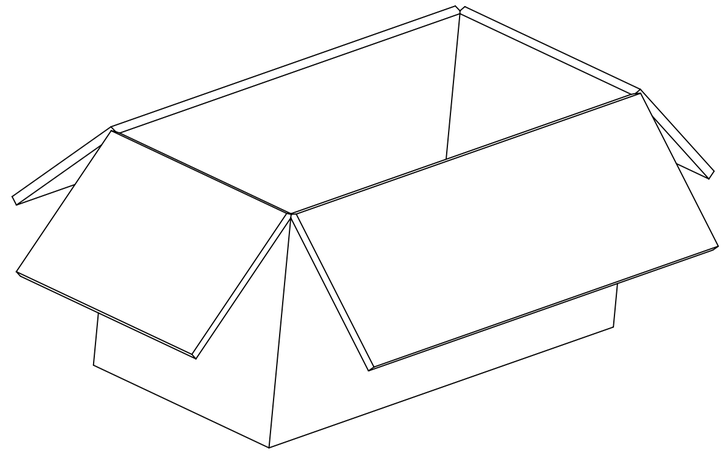

1760 SETS PER INNER
CARTON BOX
P/N: 96707-0002

FUNCTIONAL SYMBOLS FA = 0 FC = 0 FP = 0	THIS DRAWING CONTAINS INFORMATION THAT IS PROPRIETARY TO MOLEX ELECTRONIC TECHNOLOGIES, LLC AND SHOULD NOT BE USED WITHOUT WRITTEN PERMISSION				
	DIMENSION UNITS: INCH/MM	SCALE: NTS	CURRENT REV DESC: EWR-15712-A: ADDED 73251-3133 PART NO, ADDED SOLDER PROFILE SPEC	molex	
	GENERAL TOLERANCES (UNLESS SPECIFIED) ANGULAR TOL ± 2°			SMA JACK,R/A PCB,50 OHMS PLATED NICKEL, SMA-J/PCB EWR # 13330	
	4 PLACES ±				
DIVISIONAL SYMBOLS	3 PLACES ±				
	2 PLACES ±		STATUS: Production	PRODUCT CUSTOMER DRAWING	
	1 PLACE ±		DRWN: JasonYS Su 2024-11-08 CHK'D: Darry Cheng 2025-02-25 APPR: Darry Cheng 2025-02-25	DOCUMENT NUMBER: SD-73100-0115 / DOC TYPE: PSD / DOC PART: 001 / REVISION: B7	
	0 PLACES ±				
	DRAFT WHERE APPLICABLE MUST REMAIN WITHIN DIMENSIONS	THIRD ANGLE PROJECTION	DRAWING: C-SIZE / SERIES: 73100	MATERIAL NUMBER / CUSTOMER: GENERAL MARKET / SHEET NUMBER: 4 OF 4	

FORMAT: TC-tb-prod-C
REVISION: B
DATE: 2022/08/01