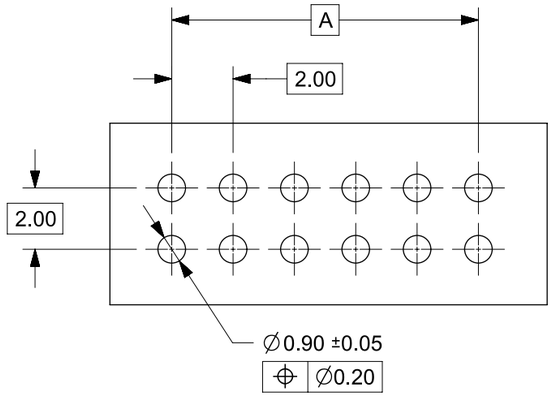

RECOMMENDED PCB LAYOUT

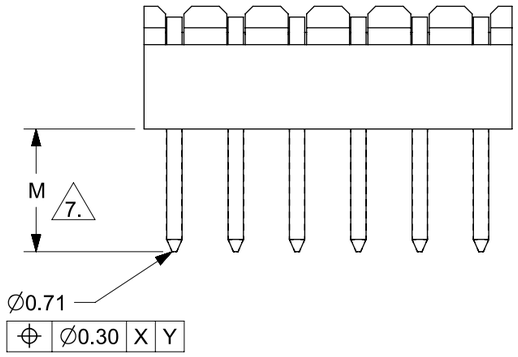

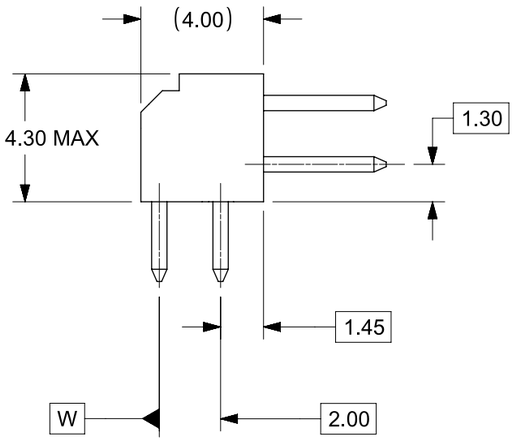

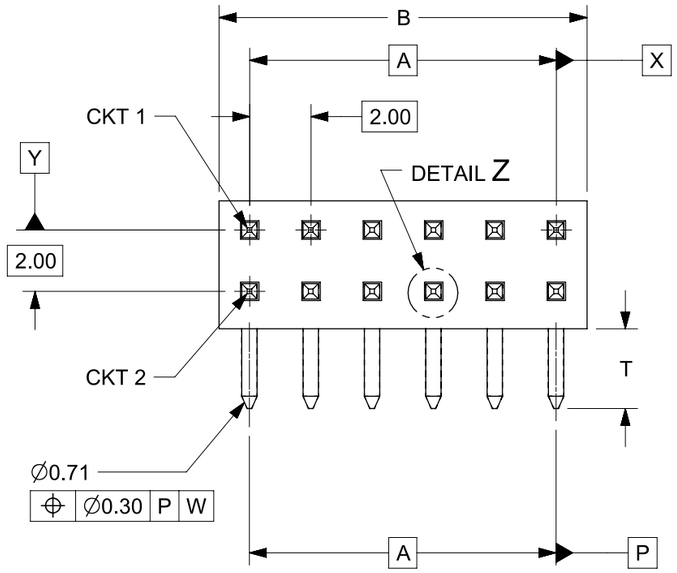

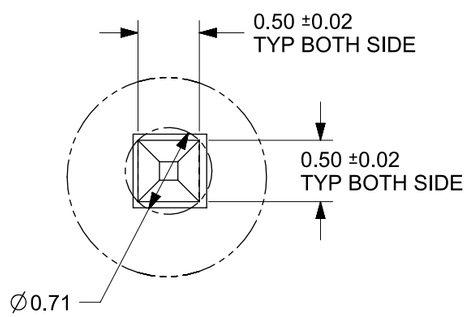

DETAIL Z

NOTES:
1. MATERIAL:
   HSG: PCT, 30% GLASS FILLED, UL 94V-0,
   COLOUR BLACK.
   PIN: 0.50MM SQ PHOSPHOR BRONZE 510
2. PLATING:
   ***5 - 0.05µm MIN - 0.25µm MAX GOLD IN CONTACT AREA,
   2.00µm MIN TIN IN SOLDERTAIL AREA, BOTH OVER
   1.25µm MIN NICKEL OVERALL

   ***6 - 0.38µm MIN GOLD IN CONTACT AREA,
   2.00µm MIN TIN IN SOLDERTAIL AREA, BOTH OVER
   1.25µm MIN NICKEL OVERALL

   ***7 - 0.76µm MIN GOLD IN CONTACT AREA,
   2.00µm MIN TIN IN SOLDERTAIL AREA, BOTH OVER
   1.25µm MIN NICKEL OVERALL

   ***8 - 2.54µm MIN TIN OVER
   1.25µm MIN NICKEL OVERALL
3. 12 CKT USED FOR ILLUSTRATION ONLY
4. PART TO BE PACKED IN POCKET TRAY/TUBE (SEE TABLE).
5. PRODUCT SPEC PS-87761-100 APPLIES.
6. RECOMMENDED PCB BOARD THK 1.60±0.10 MM.
7. MATING LENGTH: 1 - 4.00MM
   2 - 3.50MM
   3 - 3.06MM
   4 - 5.75MM
8. PART NUMBERS THAT ARE UNAVAILABLE IN THIS SD:
   87760-0646, 87760-1046, 87760-1446, 87760-2446, 87760-4046.
   (REFER TO SD-87760-133 FOR THESE PART NUMBERS)

LEGEND:

87760 - * * * *
- PLATING OPTION (SEE NOTE 2) 2.
- MATING OPTION 7.

THIS DRAWING CONTAINS INFORMATION THAT IS PROPRIETARY TO MOLEX ELECTRONIC TECHNOLOGIES, LLC AND SHOULD NOT BE USED WITHOUT WRITTEN PERMISSION

DIMENSION UNITS	SCALE
mm	NTS

GENERAL TOLERANCES (UNLESS SPECIFIED)

	MM	INCH
4 PLACES	±	±
3 PLACES	±	±
2 PLACES	± 0.2	±
1 PLACE	±	±
0 PLACES	±	±
ANGULAR TOL	± 3.0 °	

DRAFT WHERE APPLICABLE MUST REMAIN WITHIN DIMENSIONS

CURRENT REV DESC:

EC NO: 756033
DRWN: SUAIFR 2023/05/23
CHK'D: SUAIFR 2023/07/07
APPR: MRAMAKRISHNA 2023/07/10

INITIAL REVISION:
DRWN: KSEE 2003/10/15
APPR: SKTOH 2003/12/11

THIRD ANGLE PROJECTION | DRAWING: A3-SIZE | SERIES: 87760

molex

MGRID, 2MM DUAL ROW HDR.
R/A

PRODUCT CUSTOMER DRAWING

DOCUMENT NUMBER	DOC TYPE	DOC PART	REVISION
SD-87760-109	PSD	001	A18

MATERIAL NUMBER	CUSTOMER	SHEET NUMBER
SEE TABLE	GENERAL MARKET	1 OF 3

DOCUMENT STATUS	P1	RELEASE DATE	2023/07/10 05:30:26

FORMAT: Mel4ega=master=tb=prod=A3
REVISION: D
DATE: 2017/10/06

PART NUMBER	VOID PIN LOCATION	CKT SIZE	A	B	M	T	PACKAGING TYPE
87760-04**	-	4	2.00	4.00	REFER TO NOTE 7.	2.60	TRAY
87760-06** 8	-	6	4.00	6.00			
87760-08**	-	8	6.00	8.00			
87760-10** 8	-	10	8.00	10.00			
87760-12** 8	-	12	10.00	12.00			
87760-14** 8	-	14	12.00	14.00			
87760-16**	-	16	14.00	16.00			
87760-18**	-	18	16.00	18.00			
87760-20**	-	20	18.00	20.00			
87760-22**	-	22	20.00	22.00			
87760-24** 8	-	24	22.00	24.00			
87760-26**	-	26	24.00	26.00			
87760-28**	-	28	26.00	28.00			
87760-30**	-	30	28.00	30.00			
87760-32**	-	32	30.00	32.00			
87760-34**	-	34	32.00	34.00			
87760-36**	-	36	34.00	36.00			
87760-38**	-	38	36.00	38.00			
87760-40** 8	-	40	38.00	40.00			
87760-42**	-	42	40.00	42.00			
87760-44**	-	44	42.00	44.00			
87760-46**	-	46	44.00	46.00			
87760-48**	-	48	46.00	48.00			
87760-50**	-	50	48.00	50.00			

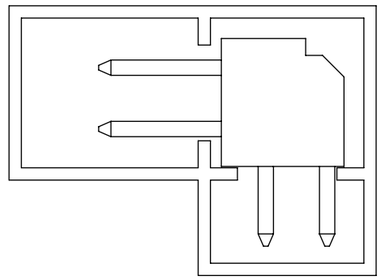

PART IN TUBE

THIS DRAWING CONTAINS INFORMATION THAT IS PROPRIETARY TO MOLEX ELECTRONIC TECHNOLOGIES, LLC AND SHOULD NOT BE USED WITHOUT WRITTEN PERMISSION

DIMENSION UNITS	SCALE
mm	NTS

GENERAL TOLERANCES (UNLESS SPECIFIED)

	MM	INCH
4 PLACES	±	±
3 PLACES	±	±
2 PLACES	± 0.2	±
1 PLACE	±	±
0 PLACES	±	±
ANGULAR TOL	± 3,0 °	

DRAFT WHERE APPLICABLE MUST REMAIN WITHIN DIMENSIONS

CURRENT REV DESC:

EC NO: 756033
DRWN: SUAIFR 2023/05/23
CHK'D: SUAIFR 2023/07/07
APPR: MRAMAKRISHNA 2023/07/10

INITIAL REVISION:
DRWN: KSEE 2003/10/15
APPR: SKTOH 2003/12/11

molex

MGRID, 2MM DUAL ROW HDR.
R/A

PRODUCT CUSTOMER DRAWING

DOCUMENT NUMBER	DOC TYPE	DOC PART	REVISION
SD-87760-109	PSD	001	A18

THIRD ANGLE PROJECTION	DRAWING	SERIES	MATERIAL NUMBER	CUSTOMER	SHEET NUMBER
	A3-SIZE	87760	SEE TABLE	GENERAL MARKET	2 OF 3

DOCUMENT STATUS	P1	RELEASE DATE	2023/07/10 05:30:26

FORMAT: Mel4ega+master+tb+prod+A3
REVISION: D
DATE: 2017/10/06

PART NUMBER	VOID PIN LOCATION	CKT SIZE	A	B	M	T	PACKAGING TYPE
87760-5116	5, 6 & 26	50	48.00	50.00	REFER TO NOTE △7.	2.60	TUBE
87760-531*	-	24	22.00	24.00		1.50	TRAY
87760-5216	-	04	2.00	4.00		2.60	TUBE
87760-5416	-	20	18.00	20.00			
87760-5248	-	28	26.00	28.00			
87760-5516	5, 6, 7, 8, 9, 10, 15, 16, 17, 18, 19, 20, 25, 26, 27, 28, 29, 30	34	32.00	34.00			
87760-0856	-	08	6.00	8.00	2.60	2.10	TRAY

A18

THIS DRAWING CONTAINS INFORMATION THAT IS PROPRIETARY TO MOLEX ELECTRONIC TECHNOLOGIES, LLC AND SHOULD NOT BE USED WITHOUT WRITTEN PERMISSION

DIMENSION UNITS	SCALE
mm	NTS

GENERAL TOLERANCES (UNLESS SPECIFIED)

	MM	INCH
4 PLACES	±	±
3 PLACES	±	±
2 PLACES	± 0.2	±
1 PLACE	±	±
0 PLACES	±	±
ANGULAR TOL	± 3.0 °	

DRAFT WHERE APPLICABLE MUST REMAIN WITHIN DIMENSIONS

CURRENT REV DESC:

EC NO: 756033
DRWN: SUAIFR 2023/05/23
CHK'D: SUAIFR 2023/07/07
APPR: MRAMAKRISHNA 2023/07/10

INITIAL REVISION:
DRWN: KSEE 2003/10/15
APPR: SKTOH 2003/12/11

molex

MGRID, 2MM DUAL ROW HDR.
R/A

PRODUCT CUSTOMER DRAWING

DOCUMENT NUMBER	DOC TYPE	DOC PART	REVISION
SD-87760-109	PSD	001	A18

THIRD ANGLE PROJECTION	DRAWING	SERIES	MATERIAL NUMBER	CUSTOMER	SHEET NUMBER
	A3-SIZE	87760	SEE TABLE	GENERAL MARKET	3 OF 3

DOCUMENT STATUS	P1	RELEASE DATE	2023/07/10 05:30:26

FORMAT: MeHega=master=B=prod=A3
REVISION: D
DATE: 2017/10/06