NOTES

△1 材料及び仕上げ(めっき仕様) : TABLE 1 参照
MATERIAL AND FINISHES : SEE TABLE 1

2. 製品仕様書 : 2059790000-PS 000
PRODUCT SPECIFICATION:2059790000-PS 000

3. 梱包形態 : SHEET 4 参照
PACKAGING INFORMATION : SEE SHEET 4

△4 嵌合相手 : 205979(ISLタイプ),212724(TPAタイプ) シリーズ
MATES WITH:205979(ISL TYPE),212724(TPA TYPE) SERIES

5. アプリケーション仕様書(コネクタ取扱い説明書) :
2059790000-AS 000
APPLICATION SPECIFICATION(CONNECTOR MANUAL) :
2059790000-AS 000

6. 端子テール部及びネイルの平坦度:0.1mm 以下.
TAIL AND NAIL COPLANARITY TO BE 0.1mm MAX

△7 偶数極に適用。
APPLY FOR EVEN CIRCUIT.

8. 端子テール部及びネイルに錫ビスマスめっきを使用している為、
外観に摺動痕が付く場合があります。
THE WOUND OF FRICTION MIGHT ADHERE TO EXTERNALS
BECAUSE THE TIN BISMUTH PLATING IS USED FOR THE TAIL AND NAIL.

9.本製品のプラスチック部に黒点・白点等が確認される場合や
色合いが異なる場合がありますが、製品性能に影響はありません。
THERE IS NO INFLUENCE IN THE PRODUCT
PERFORMANCE THOUGH THE BLACK AND WHITE SPOT ETC.
MIGHT BE CONFIRMED TO THE PLASTIC PART OF
△10 THIS PRODUCT AND THE SHADE MIGHT BE DIFFERENT.
ISLタイプを嵌合する場合、ヘッダーコネクタは基板端面から
1.0ｍｍ以下の位置に実装すること。
WHEN MATING THE ISL TYPE, HEADER CONNECTOR OUTLINE
MUST BE MOUNTED 1.0mm MAX FROM THE PCB EDGE.

△1 TABLE1

番号 No.	部品 PART	材質 MATERIAL
①	ハウジング HOUSING	ポリアミド(PA),UL94V-0, 色 : SEE CHART POLYAMIDE(PA), UL94V-0, COLOR : SEE CHART
②	ターミナル TERMINAL	黄銅 BRASS
		錫ビスマスめっき : 1.0micro-meter MIN TIN BISMUTH PLATING(TAIL AREA,CONTACT AREA)
		ニッケルめっき(下地):1.0 micro-meter MIN NICKEL(UNDER PLATING)
③	ネイル NAIL	黄銅 BRASS
		錫めっき : 1.0micro-meter MIN MATTE TIN PLATING
		ニッケルめっき(下地):1.0 micro-meter MIN NICKEL(UNDER PLATING)

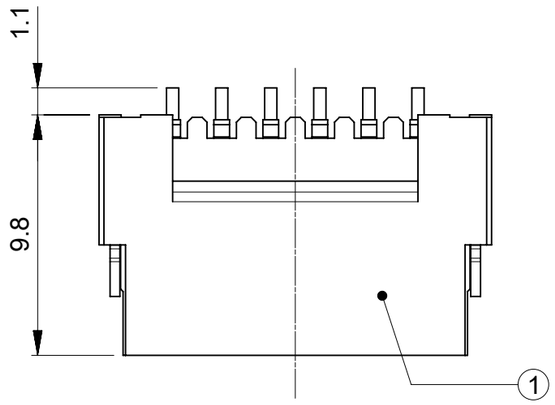

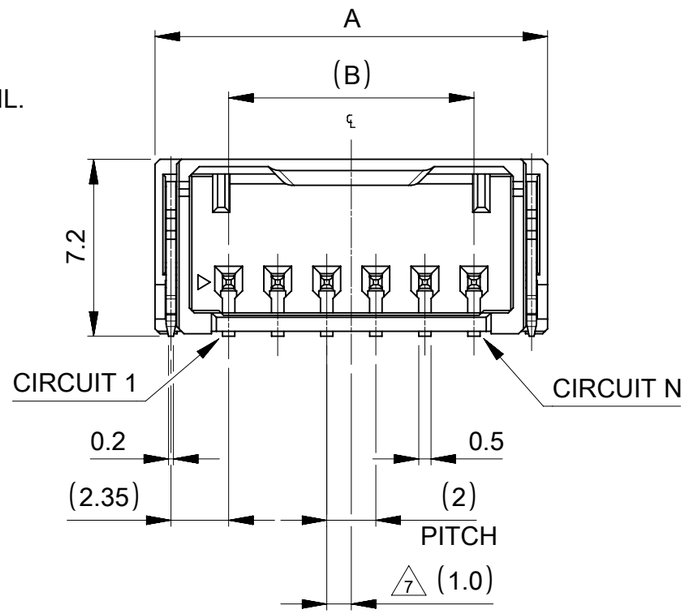

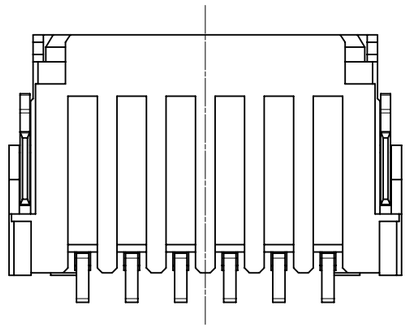

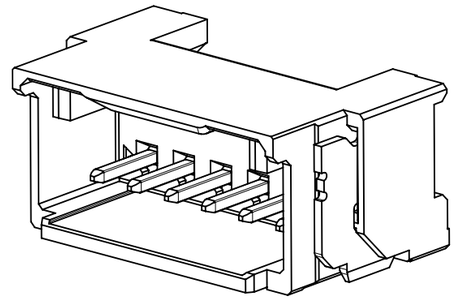

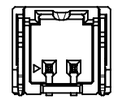

VIEW OF
2-3 CIRCUIT

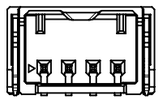

VIEW OF
4-6 CIRCUIT

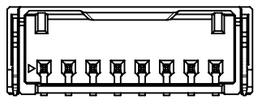

VIEW OF
7-8 CIRCUIT

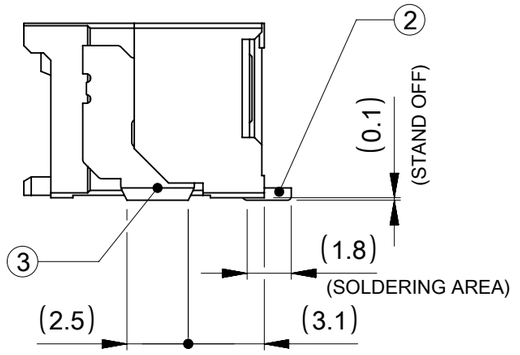

14	20	8
12	18	7
10	16	6
8	14	5
6	12	4
4	10	3
2	8	2
B	A	極数 CIRCUIT SIZE

THIS DRAWING CONTAINS INFORMATION THAT IS PROPRIETARY TO MOLEX ELECTRONIC TECHNOLOGIES, LLC AND SHOULD NOT BE USED WITHOUT WRITTEN PERMISSION

DIMENSION UNITS	mm
SCALE	NTS
GENERAL TOLERANCES (UNLESS SPECIFIED)	
ANGULAR TOL	± 3.0 °
4 PLACES	± 0.2
3 PLACES	± 0.2
2 PLACES	± 0.2
1 PLACE	± 0.2
0 PLACES	± 0.2
DRAFT WHERE APPLICABLE MUST REMAIN WITHIN DIMENSIONS	

CURRENT REV DESC: REMOVED OBSOLETED PART NUMBER AS PER PCN#517153

EC NO: 834848
DRWN: PONNAM 2025/08/29
CHK'D: GGA 2025/09/22
APPR: GGA 2025/09/22

INITIAL REVISION:
DRWN: TGREGORI 2018/02/16
APPR: SAKIYAMA 2020/07/10

THIRD ANGLE PROJECTION | DRAWING: A3-SIZE | SERIES: 205972

molex

MICRO-ONE 2.0W/B
HEADER ASSEMBLY RIGHT ANGLE

PRODUCT CUSTOMER DRAWING

DOCUMENT NUMBER	DOC TYPE	DOC PART	REVISION
2059720000-SD	PSD	000	E1

MATERIAL NUMBER	CUSTOMER	SHEET NUMBER
SEE TABLE	GENERAL	1 OF 5

DOCUMENT STATUS	P1	RELEASE DATE	2025/09/22 11:13:45

FORMAT: master-tb-prod-A3
REVISION: J1
DATE: 2021/05/01

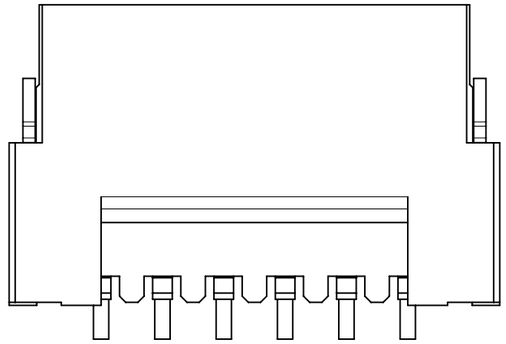

製品レイアウト
PRODUCT LAYOUT

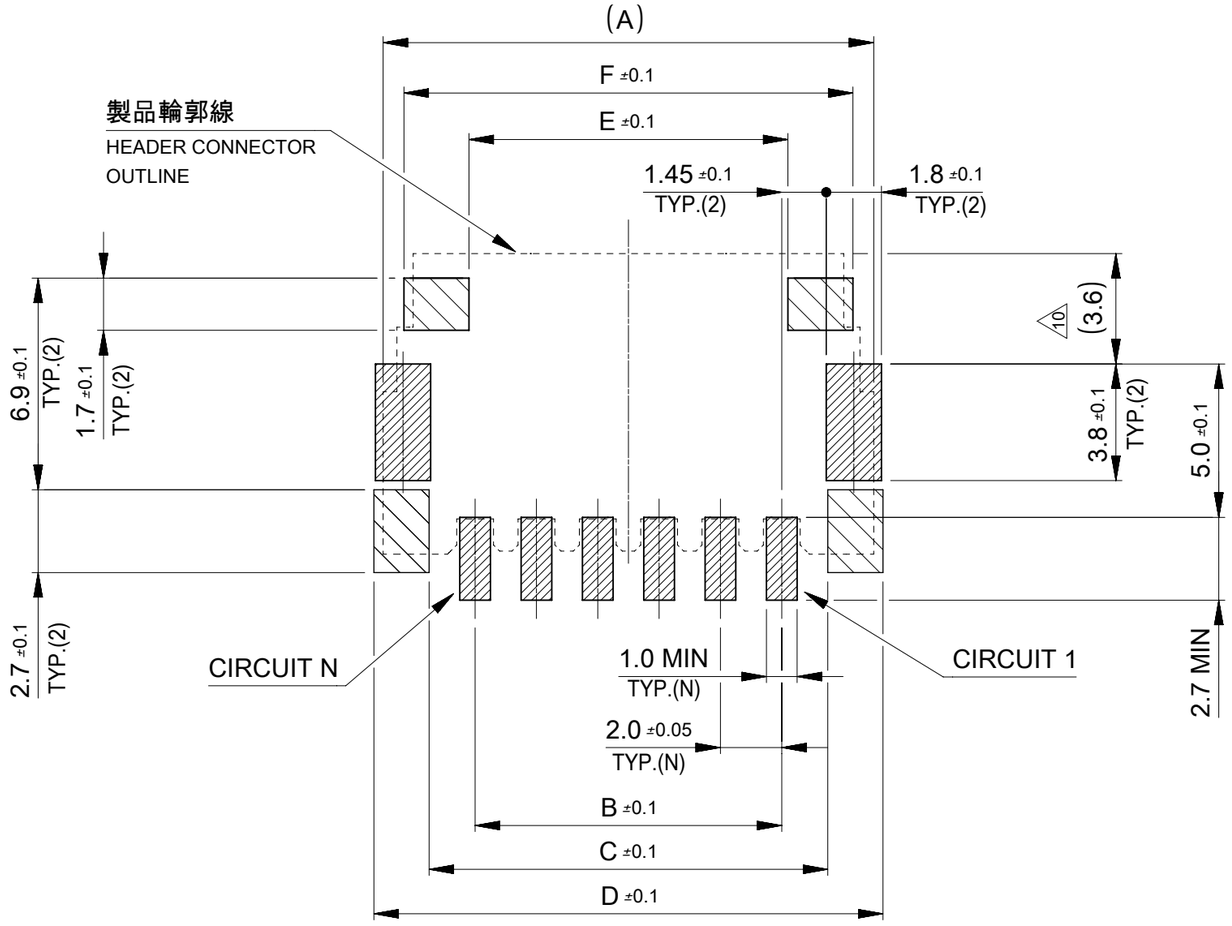

推奨基板レイアウト:実装面側
（参考：基板厚1.6mm, メタルマスク厚0.15mm, マスク開口率100%）
SUGGESTED PCB LAYOUT : COMPONENT SIDE
(REFERENCE: PCB THICKNESS 1.6mm, STENCIL THICKNESS 0.15mm,
APERTURE RATIO 100%)

:パターン禁止エリア
RESTRICTED AREA
NO PCB COMPONENTS ALLOWED

嵌合相手：205979シリーズ
MATE WITH : 205979 SERIES

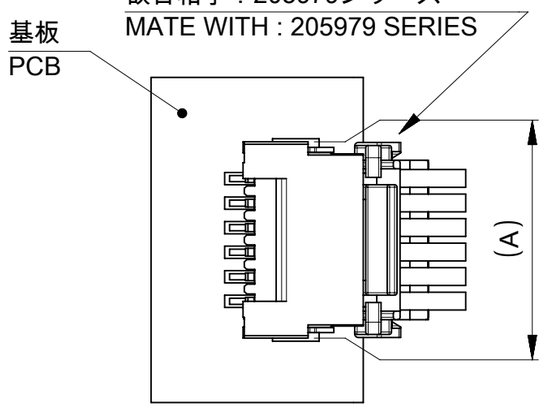

嵌合相手：212724 シリーズ
MATE WITH : 212724 SERIES

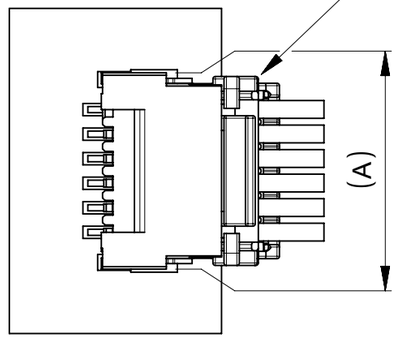

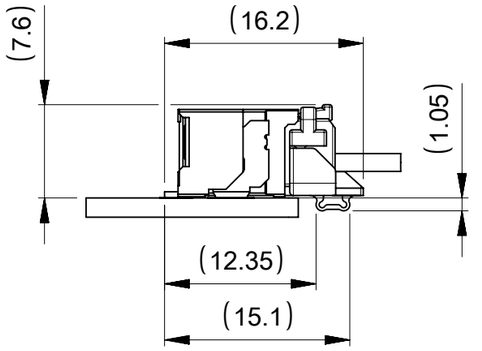

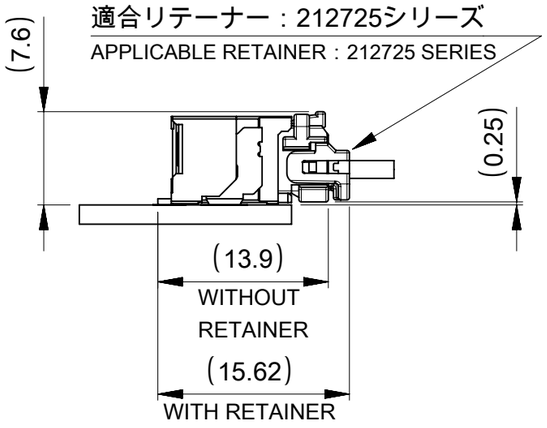

△4 ISLタイプ嵌合図
MATED CONNECTOR OF ISL TYPE

△4 TPAタイプ嵌合図
MATED CONNECTOR OF TPA TYPE

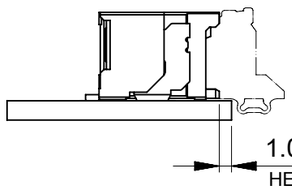

△10 ISLタイプ基板レイアウトの注意点
PCB LAYOUT PRECAUTIONS FOR ISL TYPE

18.6	14.4	20.6	17.0	8
16.6	12.4	18.6	15.0	7
14.6	10.4	16.6	13.0	6
12.6	8.4	14.6	11.0	5
10.6	6.4	12.6	9.0	4
8.6	4.4	10.6	7.0	3
6.6	2.4	8.6	5.0	2
F	E	D	C	極数 CIRCUIT SIZE

THIS DRAWING CONTAINS INFORMATION THAT IS PROPRIETARY TO MOLEX ELECTRONIC TECHNOLOGIES, LLC AND SHOULD NOT BE USED WITHOUT WRITTEN PERMISSION

DIMENSION UNITS	mm
SCALE	NTS
GENERAL TOLERANCES (UNLESS SPECIFIED)	
ANGULAR TOL	± 3.0 °
4 PLACES	± 0.2
3 PLACES	± 0.2
2 PLACES	± 0.2
1 PLACE	± 0.2
0 PLACES	± 0.2
DRAFT WHERE APPLICABLE MUST REMAIN WITHIN DIMENSIONS	

CURRENT REV DESC: REMOVED OBSOLETED PART NUMBER AS PER PCN#517153

EC NO: 834848
DRWN: PONNAM 2025/08/29
CHK'D: GGA 2025/09/22
APPR: GGA 2025/09/22

INITIAL REVISION:
DRWN: TGREGORI 2018/02/16
APPR: SAKIYAMA 2020/07/10

molex

MICRO-ONE 2.0W/B
HEADER ASSEMBLY RIGHT ANGLE

PRODUCT CUSTOMER DRAWING

DOCUMENT NUMBER	DOC TYPE	DOC PART	REVISION
2059720000-SD	PSD	000	E1

THIRD ANGLE PROJECTION	DRAWING	SERIES	MATERIAL NUMBER	CUSTOMER	SHEET NUMBER
	A3-SIZE	205972	SEE TABLE	GENERAL	2 OF 5

DOCUMENT STATUS	P1	RELEASE DATE	2025/09/22 11:13:45

FORMAT: master-tb-prod-A3
REVISION: J1
DATE: 2021/05/01

VACUUM AREA

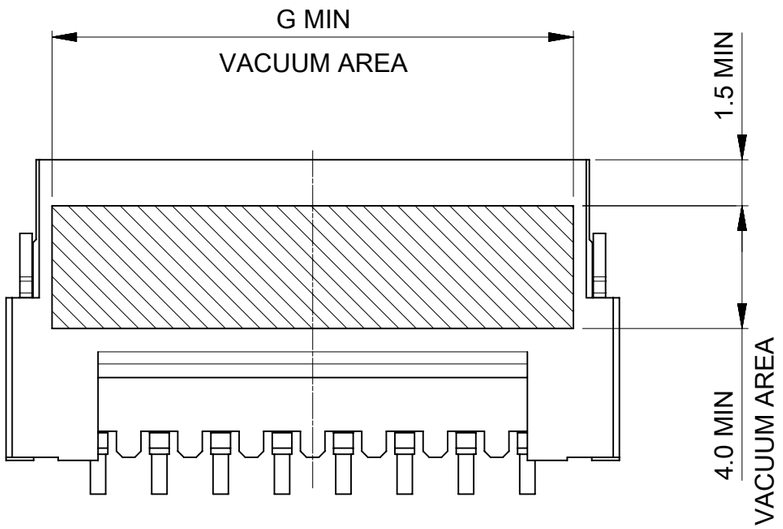

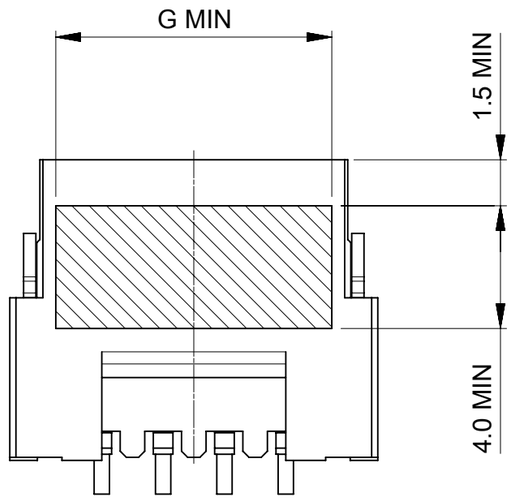

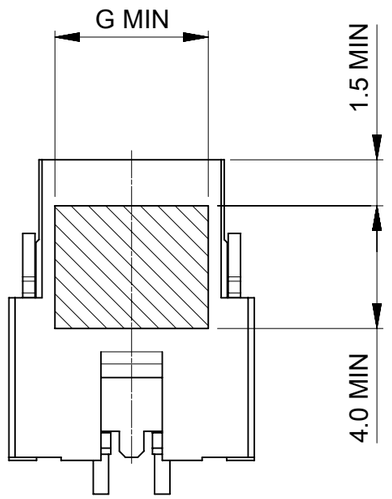

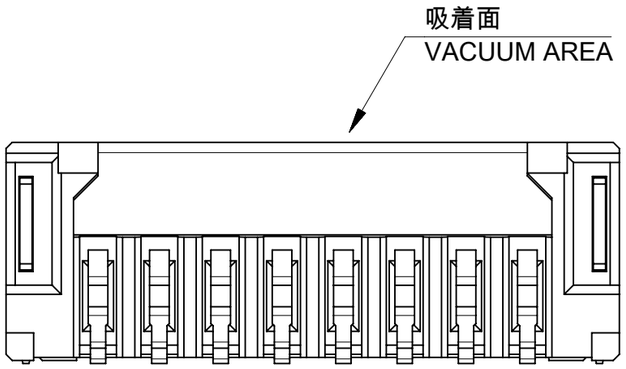

G	極数 CURCUIT SIZE
5.0	2
7.0	3
9.0	4
11.0	5
13.0	6
15.0	7
17.0	8

THIS DRAWING CONTAINS INFORMATION THAT IS PROPRIETARY TO MOLEX ELECTRONIC TECHNOLOGIES, LLC AND SHOULD NOT BE USED WITHOUT WRITTEN PERMISSION

DIMENSION UNITS	SCALE
mm	NTS

GENERAL TOLERANCES (UNLESS SPECIFIED)	
ANGULAR TOL	± 3.0 °
4 PLACES	± 0.2
3 PLACES	± 0.2
2 PLACES	± 0.2
1 PLACE	± 0.2
0 PLACES	± 0.2

DRAFT WHERE APPLICABLE MUST REMAIN WITHIN DIMENSIONS

CURRENT REV DESC: REMOVED OBSOLETED PART NUMBER AS PER PCN#517153

EC NO: 834848
DRWN: PONNAM 2025/08/29
CHK'D: GGA 2025/09/22
APPR: GGA 2025/09/22

INITIAL REVISION:
DRWN: TGREGORI 2018/02/16
APPR: SAKIYAMA 2020/07/10

THIRD ANGLE PROJECTION | DRAWING: A3-SIZE | SERIES: 205972

molex

MICRO-ONE 2.0W/B
HEADER ASSEMBLY RIGHT ANGLE

PRODUCT CUSTOMER DRAWING

DOCUMENT NUMBER	DOC TYPE	DOC PART	REVISION
2059720000-SD	PSD	000	E1

MATERIAL NUMBER	CUSTOMER	SHEET NUMBER
SEE TABLE	GENERAL	3 OF 5

DOCUMENT STATUS	P1	RELEASE DATE	2025/09/22 11:13:45

FORMAT: master-ib-prod-A3
REVISION: J1
DATE: 2021/05/01

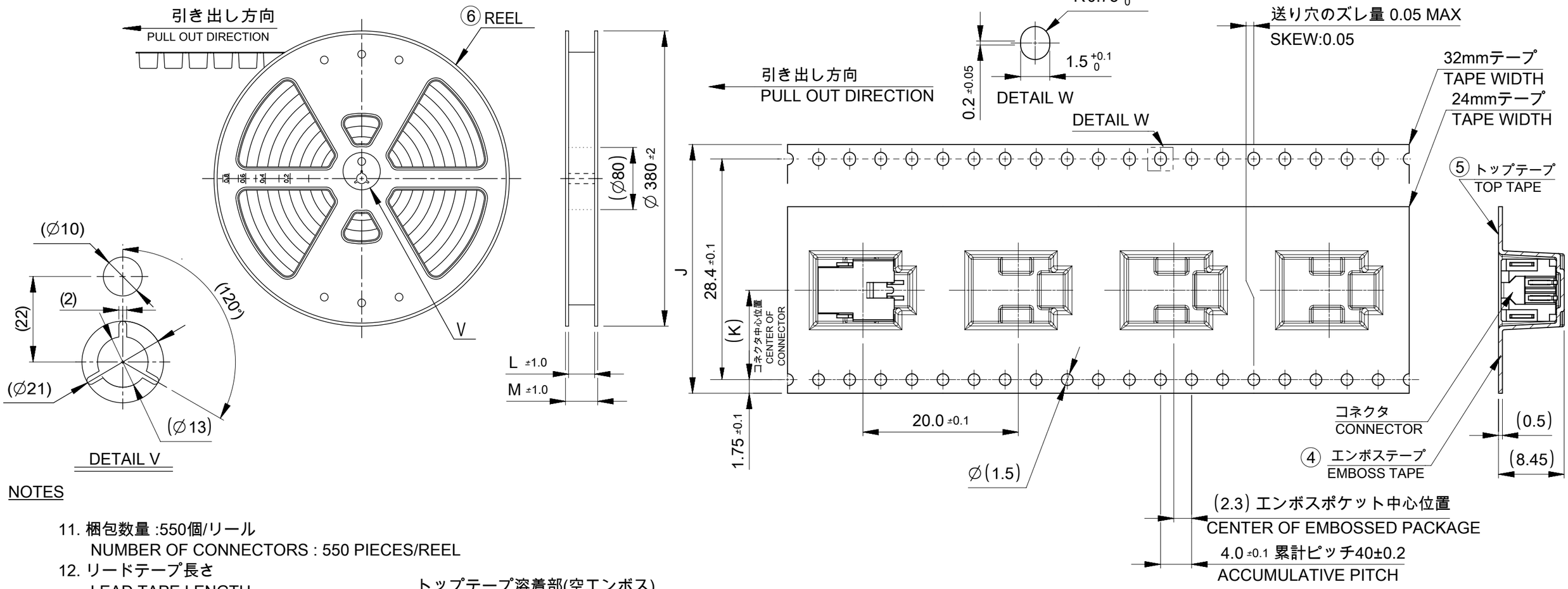

NOTES

11. 梱包数量 :550個/リール
    NUMBER OF CONNECTORS : 550 PIECES/REEL
12. リードテープ長さ
    LEAD TAPE LENGTH

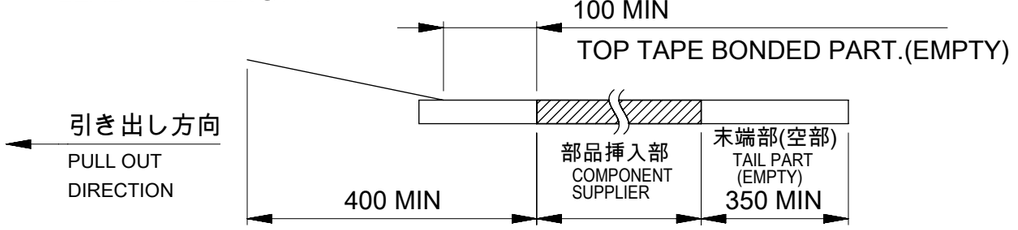

13. トップテープの剥離強度はIEC60286-3に準拠。
    TOP TAPE PEELING FORCE IS DEFINED BY IEC60286-3.
14. 梱包仕様書：2059729200-SPK 200
    PACKAGING SPECIFICATION:2059729200-SPK 200

番号 No.	部品 PART	材質 MATERIAL
④	エンボステープ EMBOSS TAPE	ポリスチレン(PS),その他 POLYSTYRENE(PS),etc
⑤	トップテープ TOP TAPE	ポリエチレン(PE),その他 POLYETHYLENE(PE),etc
⑥	リール REEL	ポリスチレン(PS) < リサイクル材を含む > POLYSTYRENE(PS) < RECYCLE MATERIAL CONTAINED >

DOCUMENT STATUS	P1	RELEASE DATE	2025/09/22 11:13:45

⚠15 発注番号：SHEET 5 参照
ORDER No.：PLEASE REFER TO SHEET 5 FOR PRODUCT LIST.

205972 0 * * *

極数
CIRCUIT SIZE

0 : COLOR NATURAL(BEIGE)
1 : COLOR BLACK

M	L	K	エンボステープ幅 J WIDTH OF TAPE	極数 CIRCUIT SIZE
37.5	33.5	14.2	32±0.3	8
				7
				6
29.5	25.5	11.5	$24^{+0.3}_{-0.1}$	5
				4
				3
				2

THIS DRAWING CONTAINS INFORMATION THAT IS PROPRIETARY TO MOLEX ELECTRONIC TECHNOLOGIES, LLC AND SHOULD NOT BE USED WITHOUT WRITTEN PERMISSION

DIMENSION UNITS	SCALE
mm	NTS

GENERAL TOLERANCES (UNLESS SPECIFIED)

ANGULAR TOL	± 3.0 °
4 PLACES	± 0.2
3 PLACES	± 0.2
2 PLACES	± 0.2
1 PLACE	± 0.2
0 PLACES	± 0.2

DRAFT WHERE APPLICABLE MUST REMAIN WITHIN DIMENSIONS

CURRENT REV DESC: REMOVED OBSOLETED PART NUMBER AS PER PCN#517153

EC NO: 834848
DRWN: PONNAM 2025/08/29
CHK'D: GGA 2025/09/22
APPR: GGA 2025/09/22

INITIAL REVISION:
DRWN: TGREGORI 2018/02/16
APPR: SAKIYAMA 2020/07/10

molex

MICRO-ONE 2.0W/B
HEADER ASSEMBLY RIGHT ANGLE

PRODUCT CUSTOMER DRAWING

DOCUMENT NUMBER	DOC TYPE	DOC PART	REVISION
2059720000-SD	PSD	000	E1

THIRD ANGLE PROJECTION	DRAWING	SERIES	MATERIAL NUMBER	CUSTOMER	SHEET NUMBER
	A3-SIZE	205972	SEE TABLE	GENERAL	4 OF 5

FORMAT: master-ib-prod-A3
REVISION: J1
DATE: 2021/05/01

△15 製品一覧 PRODUCT LIST

HOUSING COLOR BLACK	
2059720081	8
0071	7
0061	6
0051	5
0041	4
0031	3
2059720021	2
発注番号　ORDER No.	極数 CIRCUIT SIZE
PACKAGING STYLE : EMBOSSED TAPE AND REEL	

THIS DRAWING CONTAINS INFORMATION THAT IS PROPRIETARY TO MOLEX ELECTRONIC TECHNOLOGIES, LLC AND SHOULD NOT BE USED WITHOUT WRITTEN PERMISSION

DIMENSION UNITS	SCALE
mm	NTS

GENERAL TOLERANCES (UNLESS SPECIFIED)	
ANGULAR TOL	± 3.0 °
4 PLACES	± 0.2
3 PLACES	± 0.2
2 PLACES	± 0.2
1 PLACE	± 0.2
0 PLACES	± 0.2

DRAFT WHERE APPLICABLE MUST REMAIN WITHIN DIMENSIONS

CURRENT REV DESC: REMOVED OBSOLETED PART NUMBER AS PER PCN#517153

EC NO: 834848
DRWN: PONNAM 2025/08/29
CHK'D: GGA 2025/09/22
APPR: GGA 2025/09/22

INITIAL REVISION:
DRWN: TGREGORI 2018/02/16
APPR: SAKIYAMA 2020/07/10

molex

MICRO-ONE 2.0W/B
HEADER ASSEMBLY RIGHT ANGLE

PRODUCT CUSTOMER DRAWING

DOCUMENT NUMBER	DOC TYPE	DOC PART	REVISION
2059720000-SD	PSD	000	E1

THIRD ANGLE PROJECTION	DRAWING	SERIES	MATERIAL NUMBER	CUSTOMER	SHEET NUMBER
	A3-SIZE	205972	SEE TABLE	GENERAL	5 OF 5

DOCUMENT STATUS	P1	RELEASE DATE	2025/09/22 11:13:45

FORMAT: master-ib-prod-A3
REVISION: J1
DATE: 2021/05/01