

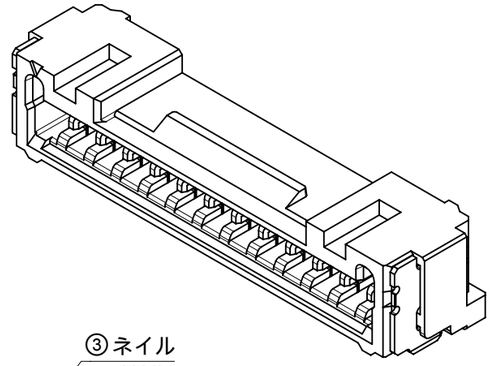

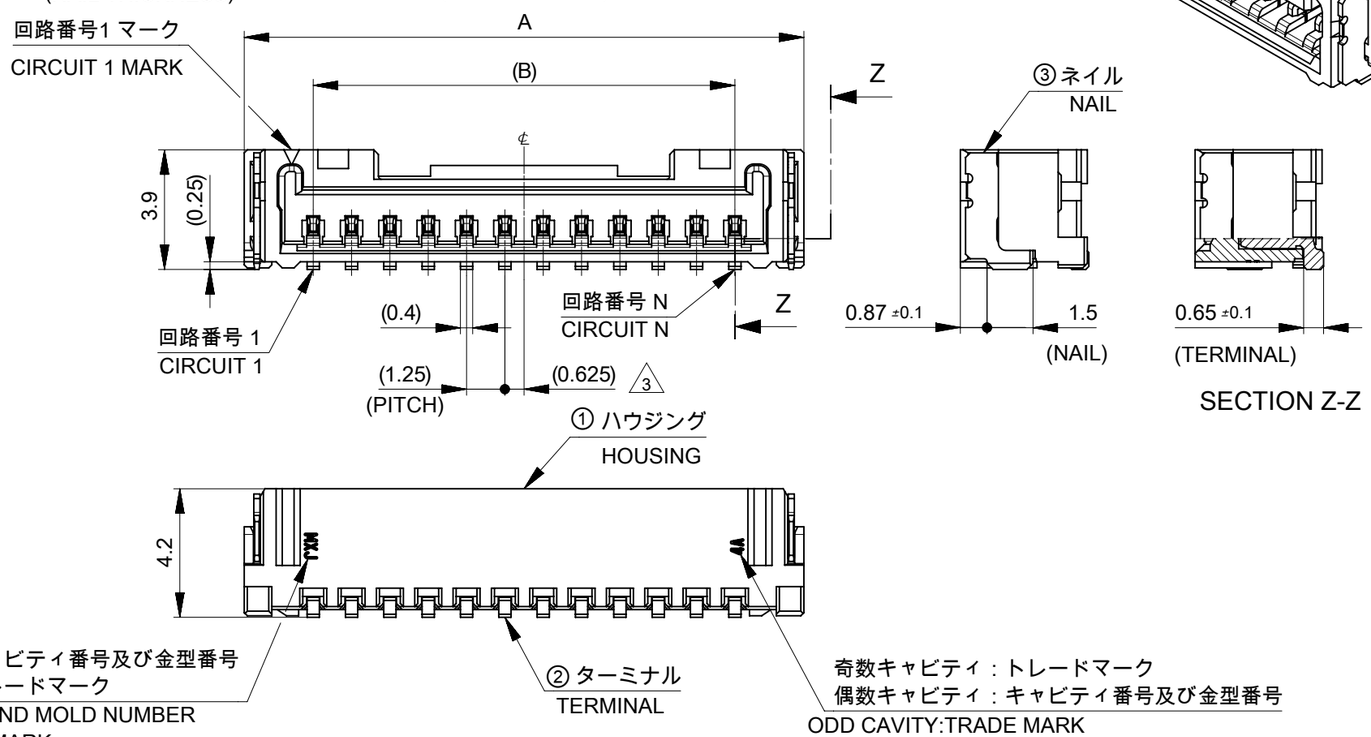

SECTION Z-Z

奇数キャビティ：キャビティ番号及び金型番号
偶数キャビティ：トレードマーク
ODD CAVITY:CAVITY AND MOLD NUMBER
EVEN CAVITY:TRADE MARK

奇数キャビティ：トレードマーク
偶数キャビティ：キャビティ番号及び金型番号
ODD CAVITY:TRADE MARK
EVEN CAVITY:CAVITY AND MOLD NUMBER

注記 NOTES

1. 材料及び仕上げ（めっき仕様）：TABLE 1, TABLE 2
   MATERIAL AND FINISHES(PLATING SPECIFICATION)
   : SEE TABLE 1. TABLE 2
2. 嵌合相手：505565シリーズ
   MATE WITH: 505565SERIES
3. 偶数極 に適用
   APPLY TO EVEN CIRCUIT.
4. 製品仕様書：5055650002 PS 000
   PRODUCT SPECIFICATION:5055650002 PS 000
5. 発注番号：SHEET 5 参照
   ORDER NUMBER : PLEASE REFER TO SHEET 5

505567 ** * *

極数 CIRCUIT SIZE

番号 NO.	接点部 金めっき厚 CONTACT GOLD PLATING THICKNESS [MICROMETER MINIMUM]
8	0.1
3	0.38
5	0.76

番号 NO.	ハウジングカラー HOUSING COLOR
0	ナチュラル(ベージュ) NATURAL(BEIGE)
1	黒 BLACK
2	赤 RED
3	黄 YELLOW
4	青 BLUE
6	緑 GREEN
8	橙 ORANGE

6. ターミナルとネイルの平坦度は0.1mm以下
   TERMINAL AND NAIL COPLANARITY : 0.1mm MAXIMUM.
7. コネクタ取扱説明書：5055650000-AS PS 000
   APPLICATION SPECIFICATION : 5055650000-AS PS 000

1 TABLE 1

番号 NO.	部品 PART	材質 MATERIAL
①	ハウジング HOUSING	ポリアミド(PA),ガラス充填,UL94 V-0,色：SHEET 5参照 POLYAMIDE (PA),GLASS FILLED,UL94 V-0,COLOR:SEE SHEET 5
②	ターミナル TERMINAL	黄銅 BRASS
		接点部：金めっき めっき厚は注記5参照 CONTACT : GOLD PLATING PLATING THICKNESS : SEE NOTE 5.
		ニッケルめっき(下地めっき)：1.0 MICROMETER MINIMUM NICKEL PLATING (UNDER PLATING)
③	ネイル NAIL	黄銅 BRASS
		錫めっき：1.0 MICROMETER MINIMUM MATTE TIN PLATING
		ニッケルめっき(下地めっき)：1.0 MICROMETER MINIMUM NICKEL PLATING (UNDER PLATING)

H	G	F	E	D	C	B	A	極数 CIRCUIT SIZE
49.4	45.4	20.2	44±0.3	10.7	22.2	18.75	23.25	16
					20.95	17.5	22	15
					19.7	16.25	20.75	14
37.4	33.4	14.2	32±0.3	9.2	18.45	15	19.5	13
					17.2	13.75	18.25	12
					15.95	12.5	17	11
					14.7	11.25	15.75	10
29.4	25.4	11.5	$24^{+0.3}_{-0.1}$	6.7	13.45	10	14.5	9
					12.2	8.75	13.25	8
					10.95	7.5	12	7
				6.6	9.7	6.25	10.75	6
				5.35	8.45	5	9.5	5
				4.1	7.2	3.75	8.25	4
21.4	17.4	7.5	$16^{+0.3}_{-0.1}$	2.85	5.95	2.5	7	3
				1.9	4.7	1.25	5.75	2

THIS DRAWING CONTAINS INFORMATION THAT IS PROPRIETARY TO MOLEX ELECTRONIC TECHNOLOGIES, LLC AND SHOULD NOT BE USED WITHOUT WRITTEN PERMISSION

DIMENSION UNITS	SCALE
mm	NTS

GENERAL TOLERANCES (UNLESS SPECIFIED)

ANGULAR TOL	±	3.0 °
4 PLACES	±	0.2
3 PLACES	±	0.2
2 PLACES	±	0.2
1 PLACE	±	0.2
0 PLACES	±	0.2

DRAFT WHERE APPLICABLE MUST REMAIN WITHIN DIMENSIONS

CURRENT REV DESC: REMOVED OBSOLETED PART NUMBERS AS PER PCN#515932.

EC NO: 812554
DRWN: RAVINR1 2025/01/28
CHK'D: GGA 2025/02/25
APPR: GGA 2025/02/25

INITIAL REVISION:
DRWN: RWATANABE01 2017/11/28
APPR: TKANEKO 2017/12/06

THIRD ANGLE PROJECTION | DRAWING: A3-SIZE | SERIES: 505567

molex

MICRO-LOCK PLUS 1.25 W/B
SINGLE ROW RIGHT ANGLE SMT PLUG ASSEMBLY
GOLD PLATING

PRODUCT CUSTOMER DRAWING

DOCUMENT NUMBER	DOC TYPE	DOC PART	REVISION
5055670010-SD	PSD	000	D1

MATERIAL NUMBER	CUSTOMER	SHEET NUMBER
SEE TABLE	GENERAL	1 OF 5

DOCUMENT STATUS	P1	RELEASE DATE	2025/02/25 06:03:54

FORMAT: master-tb-prod-A3
REVISION: J1
DATE: 2021/05/01

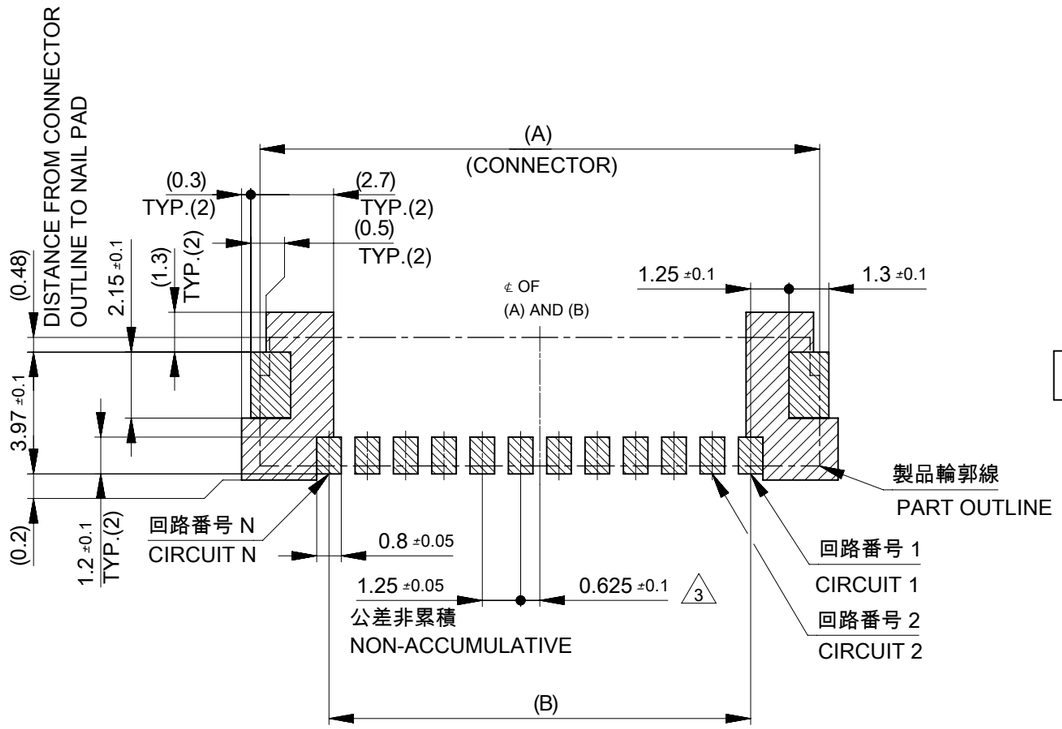

推奨基板レイアウト
RECOMMENDED PCB PATTERN LAYOUT

(参考：基板厚1.6mm, メタルマスク厚さ 0.15mm, マスク開口率 100%)
(REFERENCE: PCB THICKNESS 1.6mm, STENCIL THICKNESS 0.15mm, APERTURE RATIO 100%)

パターン非推奨エリア
パターンを引き回す際は、製品機能に影響がないことをご確認ください。
PATTERN IS NOT RECOMMENDED ON THE HATCHING AREA
PLEASE CHECK NOT TO HAVE PROBLEM FOR PRODUCT FUNCTION
WHEN SETTING PATTERN ON THE HATCHING AREA.

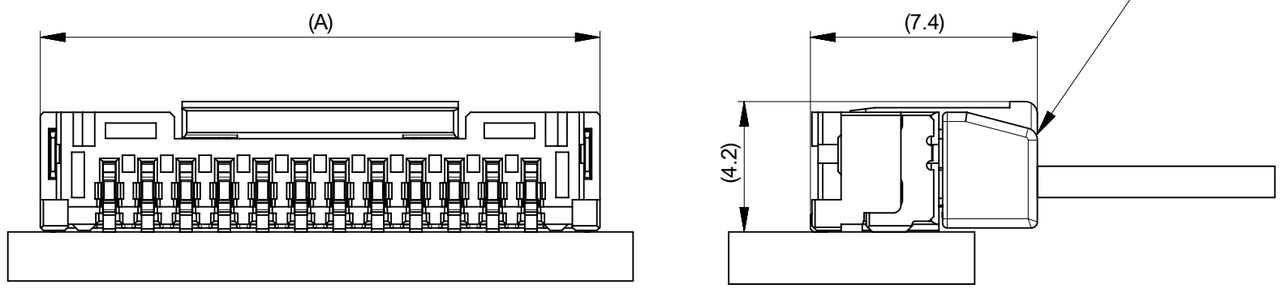

嵌合状態図
MATED CONNECTORS

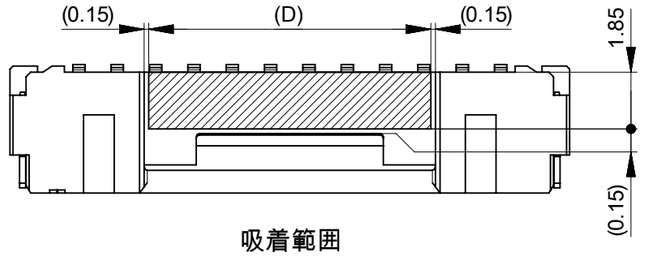

吸着範囲
SUCTION AREA

THIS DRAWING CONTAINS INFORMATION THAT IS PROPRIETARY TO MOLEX ELECTRONIC TECHNOLOGIES, LLC AND SHOULD NOT BE USED WITHOUT WRITTEN PERMISSION

DIMENSION UNITS	SCALE
mm	NTS

GENERAL TOLERANCES (UNLESS SPECIFIED)

ANGULAR TOL	±	3.0 °
4 PLACES	±	0.2
3 PLACES	±	0.2
2 PLACES	±	0.2
1 PLACE	±	0.2
0 PLACES	±	0.2

DRAFT WHERE APPLICABLE MUST REMAIN WITHIN DIMENSIONS

CURRENT REV DESC: REMOVED OBSOLETED PART NUMBERS AS PER PCN#515932.

EC NO: 812554
DRWN: RAVINR1 2025/01/28
CHK'D: GGA 2025/02/25
APPR: GGA 2025/02/25

INITIAL REVISION:
DRWN: RWATANABE01 2017/11/28
APPR: TKANEKO 2017/12/06

THIRD ANGLE PROJECTION | DRAWING: A3-SIZE | SERIES: 505567

molex

MICRO-LOCK PLUS 1.25 W/B
SINGLE ROW RIGHT ANGLE SMT PLUG ASSEMBLY
GOLD PLATING

PRODUCT CUSTOMER DRAWING

DOCUMENT NUMBER	DOC TYPE	DOC PART	REVISION
5055670010-SD	PSD	000	D1

MATERIAL NUMBER	CUSTOMER	SHEET NUMBER
SEE TABLE	GENERAL	2 OF 5

DOCUMENT STATUS	P1	RELEASE DATE	2025/02/25 06:03:54

FORMAT: master-lb-prod-A3
REVISION: J1
DATE: 2021/05/01

製品形状
PRODUCT SHAPE

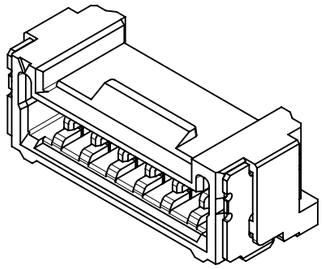

2-11極
2-11 CIRCUIT

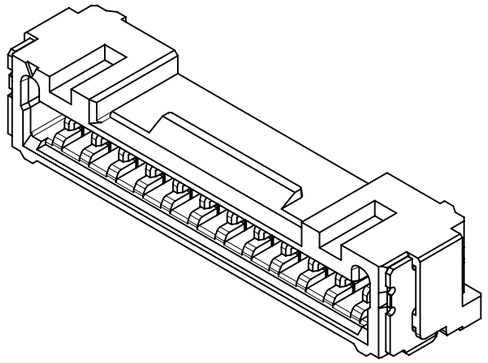

12-13極
12-13 CIRCUIT

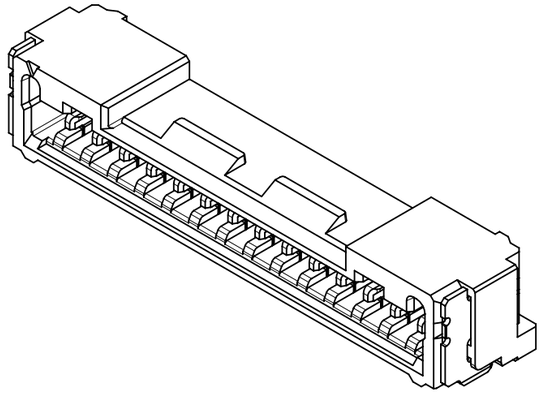

14極
14 CIRCUIT

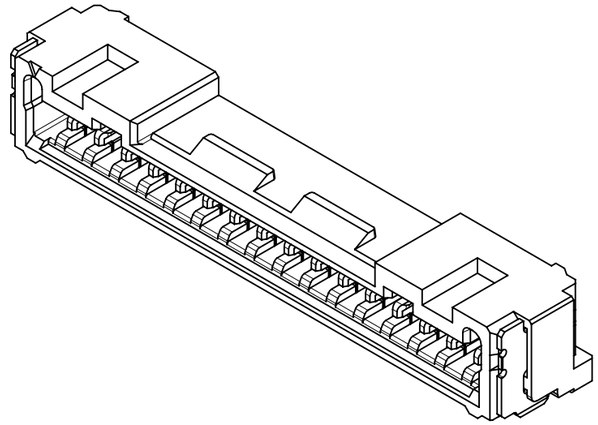

15-16極
15-16 CIRCUIT

THIS DRAWING CONTAINS INFORMATION THAT IS PROPRIETARY TO MOLEX ELECTRONIC TECHNOLOGIES, LLC AND SHOULD NOT BE USED WITHOUT WRITTEN PERMISSION

DIMENSION UNITS	SCALE
mm	NTS

GENERAL TOLERANCES (UNLESS SPECIFIED)		
ANGULAR TOL	±	3.0 °
4 PLACES	±	0.2
3 PLACES	±	0.2
2 PLACES	±	0.2
1 PLACE	±	0.2
0 PLACES	±	0.2

DRAFT WHERE APPLICABLE MUST REMAIN WITHIN DIMENSIONS

CURRENT REV DESC: REMOVED OBSOLETED PART NUMBERS AS PER PCN#515932.

EC NO:	812554	
DRWN:	RAVINR1	2025/01/28
CHK'D:	GGA	2025/02/25
APPR:	GGA	2025/02/25

INITIAL REVISION:

DRWN:	RWATANABE01	2017/11/28
APPR:	TKANEKO	2017/12/06

molex

MICRO-LOCK PLUS 1.25 W/B
SINGLE ROW RIGHT ANGLE SMT PLUG ASSEMBLY
GOLD PLATING

PRODUCT CUSTOMER DRAWING

DOCUMENT NUMBER	DOC TYPE	DOC PART	REVISION
5055670010-SD	PSD	000	D1

THIRD ANGLE PROJECTION	DRAWING	SERIES	MATERIAL NUMBER	CUSTOMER	SHEET NUMBER
	A3-SIZE	505567	SEE TABLE	GENERAL	3 OF 5

DOCUMENT STATUS	P1	RELEASE DATE	2025/02/25 06:03:54

FORMAT: master-ib-prod-A3
REVISION: J1
DATE: 2021/05/01

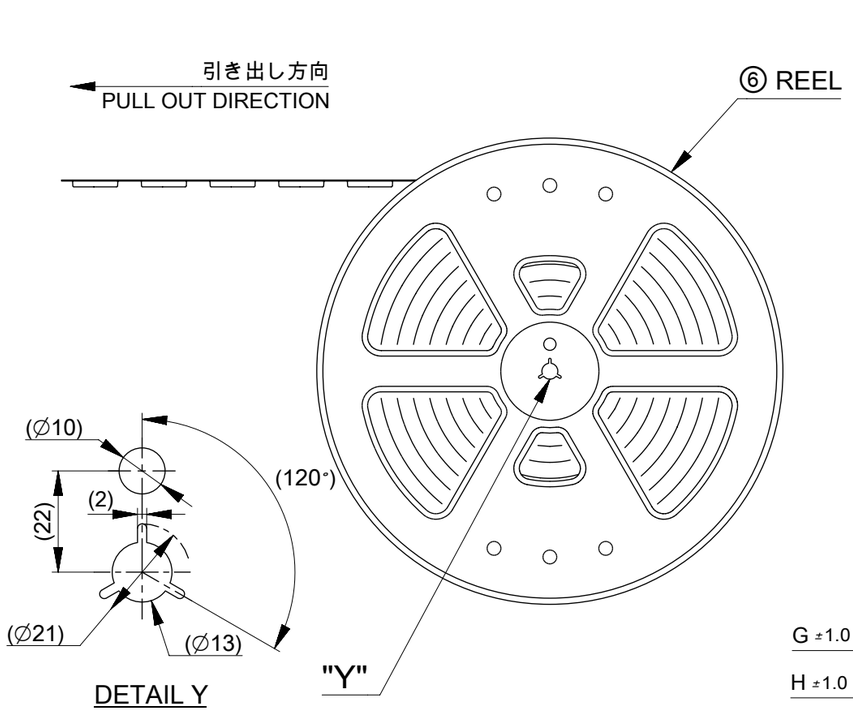

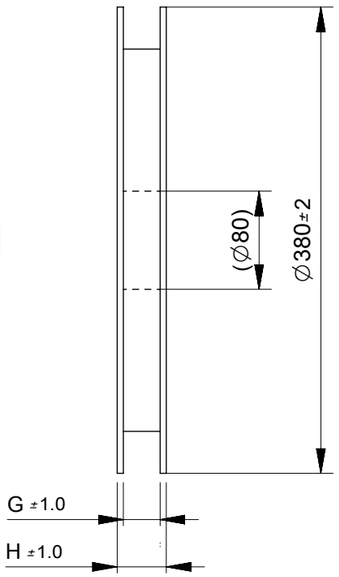

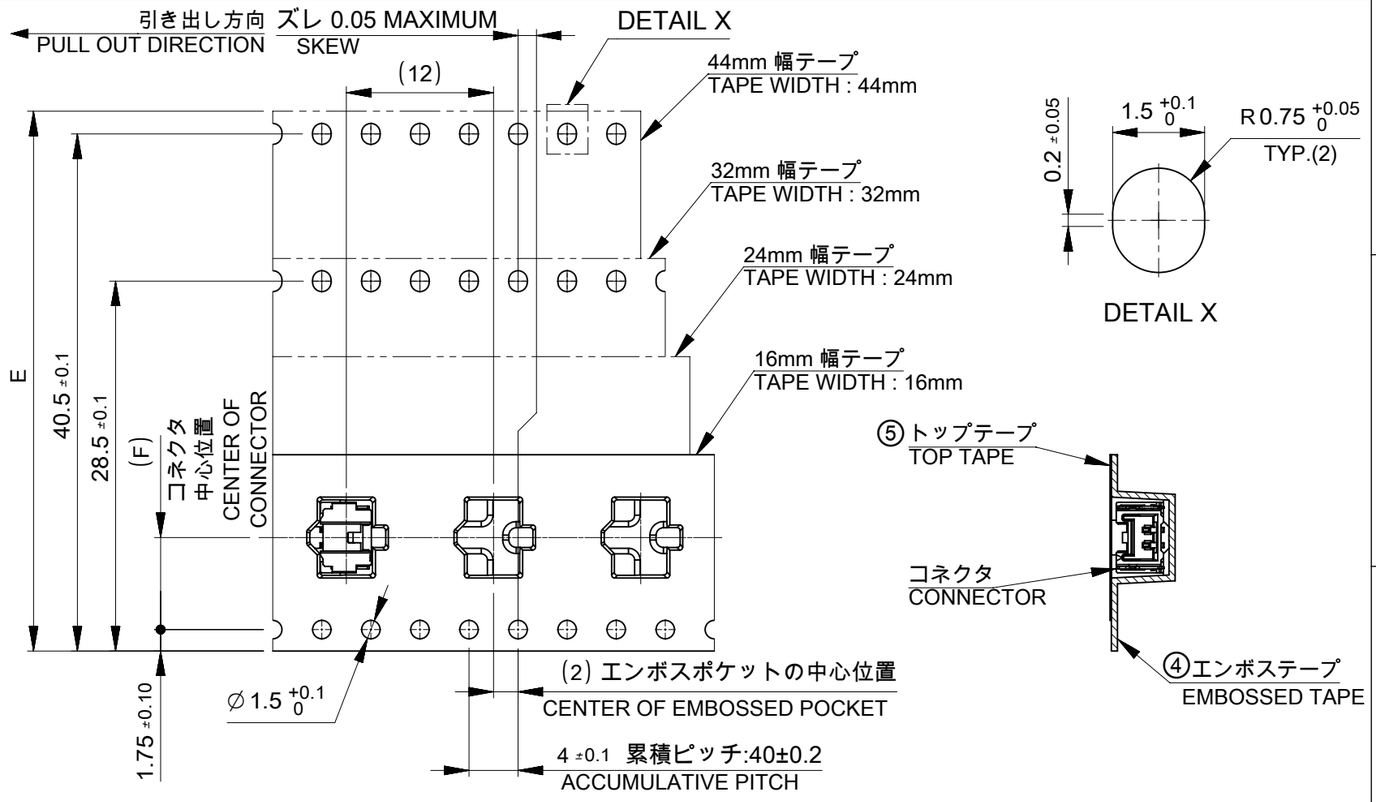

注記 NOTES

8. 梱包数量：1200個 / リール
   NUMBER OF CONNECTORS : 1200 PCS/REEL.
9. リードテープ長さ LEAD TAPE LENGTH.

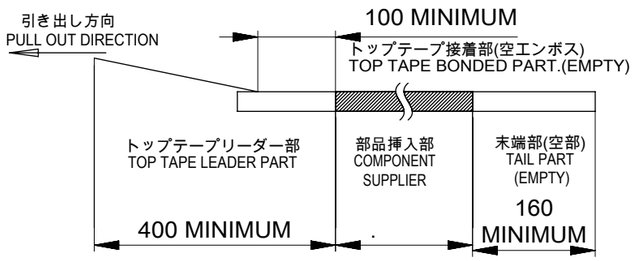

10. トップテープの剥離強度はIEC60286-3に準拠
    TOP TAPE PEELING FORCE IS DEFINED BY IEC60286-3.
11. 梱包仕様書：5055679200 PS 200
    PACKING SPECIFICATION : 5055679200 PS 200

⚠1 TABLE 2

番号 NO.	部品 PART	材質 MATERIAL
④	エンボステープ EMBOSSED TAPE	ポリスチレン(PS) POLYSTYRENE(PS)
⑤	トップテープ TOP TAPE	ポリエチレン(PE), その他 POLYETHYLENE(PE), ETC
⑥	リール REEL	ポリスチレン(PS) < リサイクル材を含む > POLYSTYRENE(PS) < RECYCLE MATERIAL CONTAINED >

DOCUMENT STATUS	P1	RELEASE DATE	2025/02/25 06:03:54

THIS DRAWING CONTAINS INFORMATION THAT IS PROPRIETARY TO MOLEX ELECTRONIC TECHNOLOGIES, LLC AND SHOULD NOT BE USED WITHOUT WRITTEN PERMISSION

DIMENSION UNITS	SCALE
mm	NTS

GENERAL TOLERANCES (UNLESS SPECIFIED)

ANGULAR TOL	±	3.0 °
4 PLACES	±	0.2
3 PLACES	±	0.2
2 PLACES	±	0.2
1 PLACE	±	0.2
0 PLACES	±	0.2

DRAFT WHERE APPLICABLE MUST REMAIN WITHIN DIMENSIONS

CURRENT REV DESC: REMOVED OBSOLETED PART NUMBERS AS PER PCN#515932.

EC NO: 812554
DRWN: RAVINR1 2025/01/28
CHK'D: GGA 2025/02/25
APPR: GGA 2025/02/25

INITIAL REVISION:
DRWN: RWATANABE01 2017/11/28
APPR: TKANEKO 2017/12/06

THIRD ANGLE PROJECTION | DRAWING: A3-SIZE | SERIES: 505567

molex

MICRO-LOCK PLUS 1.25 W/B
SINGLE ROW RIGHT ANGLE SMT PLUG ASSEMBLY
GOLD PLATING

PRODUCT CUSTOMER DRAWING

DOCUMENT NUMBER	DOC TYPE	DOC PART	REVISION
5055670010-SD	PSD	000	D1

MATERIAL NUMBER	CUSTOMER	SHEET NUMBER
SEE TABLE	GENERAL	4 OF 5

FORMAT: master-tb-prod-A3
REVISION: J1
DATE: 2021/05/01

△5 505567**8*発注番号一覧 ORDER NUMBER LIST

BLUE	RED	BLACK	NATURAL (BEIGE)	HOUSING COLOR
5055671684	5055671682	5055671681	5055671680	16
5055671584	5055671582	5055671581	5055671580	15
5055671484	5055671482	5055671481	5055671480	14
5055671384	5055671382	5055671381	5055671380	13
5055671284	5055671282	5055671281	5055671280	12
5055671184	5055671182	5055671181	5055671180	11
5055671084	5055671082	5055671081	5055671080	10
5055670984	5055670982	5055670981	5055670980	9
5055670884	5055670882	5055670881	5055670880	8
5055670784	5055670782	5055670781	5055670780	7
5055670684	5055670682	5055670681	5055670680	6
5055670584	5055670582	5055670581	5055670580	5
5055670484	5055670482	5055670481	5055670480	4
5055670384	5055670382	5055670381	5055670380	3
5055670284	5055670282	5055670281	5055670280	2
発注番号：ORDER NUMBER				極数 CIRCUIT SIZE
梱包形態：エンボステープ梱包 PACKAGING : EMBOSSED TAPE AND REEL				

△5 505567**5*発注番号一覧 ORDER NUMBER LIST

ORANGE	GREEN	BLUE	YELLOW	RED	BLACK	NATURAL (BEIGE)	HOUSING COLOR
5055671658	5055671656	5055671654	5055671653	5055671652	5055671651	5055671650	16
5055671558	5055671556	5055671554	5055671553	5055671552	5055671551	5055671550	15
5055671458	5055671456	5055671454	5055671453	5055671452	5055671451	5055671450	14
5055671358	5055671356	5055671354	5055671353	5055671352	5055671351	5055671350	13
5055671258	5055671256	5055671254	5055671253	5055671252	5055671251	5055671250	12
5055671158	5055671156	5055671154	5055671153	5055671152	5055671151	5055671150	11
5055671058	5055671056	5055671054	5055671053	5055671052	5055671051	5055671050	10
5055670958	5055670956	5055670954	5055670953	5055670952	5055670951	5055670950	9
5055670858	5055670856	5055670854	5055670853	5055670852	5055670851	5055670850	8
5055670758	5055670756	5055670754	5055670753	5055670752	5055670751	5055670750	7
5055670658	5055670656	5055670654	5055670653	5055670652	5055670651	5055670650	6
5055670558	5055670556	5055670554	5055670553	5055670552	5055670551	5055670550	5
5055670458	5055670456	5055670454	5055670453	5055670452	5055670451	5055670450	4
5055670358	5055670356	5055670354	5055670353	5055670352	5055670351	5055670350	3
5055670258	5055670256	5055670254	5055670253	5055670252	5055670251	5055670250	2
発注番号：ORDER NUMBER							極数 CIRCUIT SIZE
梱包形態：エンボステープ梱包 PACKAGING : EMBOSSED TAPE AND REEL							

△5 505567**3*発注番号一覧 ORDER NUMBER LIST

ORANGE	GREEN	BLUE	YELLOW	RED	BLACK	NATURAL (BEIGE)	HOUSING COLOR
5055671638	5055671636	5055671634	5055671633	5055671632	5055671631	5055671630	16
5055671538	5055671536	5055671534	5055671533	5055671532	5055671531	5055671530	15
5055671438	5055671436	5055671434	5055671433	5055671432	5055671431	5055671430	14
5055671338	5055671336	5055671334	5055671333	5055671332	5055671331	5055671330	13
5055671238	5055671236	5055671234	5055671233	5055671232	5055671231	5055671230	12
5055671138	5055671136	5055671134	5055671133	5055671132	5055671131	5055671130	11
5055671038	5055671036	5055671034	5055671033	5055671032	5055671031	5055671030	10
5055670938	5055670936	5055670934	5055670933	5055670932	5055670931	5055670930	9
5055670838	5055670836	5055670834	5055670833	5055670832	5055670831	5055670830	8
5055670738	5055670736	5055670734	5055670733	5055670732	5055670731	5055670730	7
5055670638	5055670636	5055670634	5055670633	5055670632	5055670631	5055670630	6
5055670538	5055670536	5055670534	5055670533	5055670532	5055670531	5055670530	5
5055670438	5055670436	5055670434	5055670433	5055670432	5055670431	5055670430	4
5055670338	5055670336	5055670334	5055670333	5055670332	5055670331	5055670330	3
5055670238	5055670236	5055670234	5055670233	5055670232	5055670231	5055670230	2
発注番号：ORDER NUMBER							極数 CIRCUIT SIZE
梱包形態：エンボステープ梱包 PACKAGING : EMBOSSED TAPE AND REEL							

THIS DRAWING CONTAINS INFORMATION THAT IS PROPRIETARY TO MOLEX ELECTRONIC TECHNOLOGIES, LLC AND SHOULD NOT BE USED WITHOUT WRITTEN PERMISSION

DIMENSION UNITS	SCALE
mm	NTS

GENERAL TOLERANCES (UNLESS SPECIFIED)

ANGULAR TOL	±	3.0 °
4 PLACES	±	0.2
3 PLACES	±	0.2
2 PLACES	±	0.2
1 PLACE	±	0.2
0 PLACES	±	0.2

DRAFT WHERE APPLICABLE MUST REMAIN WITHIN DIMENSIONS

CURRENT REV DESC: REMOVED OBSOLETED PART NUMBERS AS PER PCN#515932.

EC NO: 812554
DRWN: RAVINR1 2025/01/28
CHK'D: GGA 2025/02/25
APPR: GGA 2025/02/25

INITIAL REVISION:
DRWN: RWATANABE01 2017/11/28
APPR: TKANEKO 2017/12/06

molex

MICRO-LOCK PLUS 1.25 W/B
SINGLE ROW RIGHT ANGLE SMT PLUG ASSEMBLY
GOLD PLATING

PRODUCT CUSTOMER DRAWING

DOCUMENT NUMBER	DOC TYPE	DOC PART	REVISION
5055670010-SD	PSD	000	D1

THIRD ANGLE PROJECTION	DRAWING	SERIES	MATERIAL NUMBER	CUSTOMER	SHEET NUMBER
	A3-SIZE	505567	SEE TABLE	GENERAL	5 OF 5

DOCUMENT STATUS	P1	RELEASE DATE	2025/02/25 06:03:54

FORMAT: master-ib-prod-A3
REVISION: J1
DATE: 2021/05/01