

12CKT POLARIZATION A

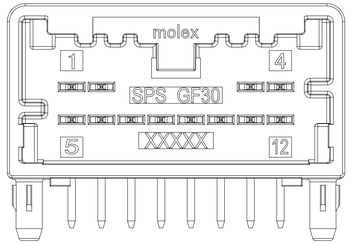

12CKT POLARIZATION B

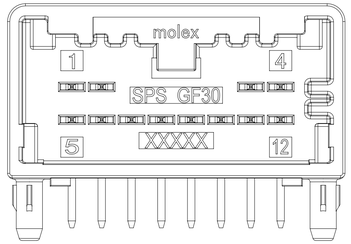

12CKT POLARIZATION C

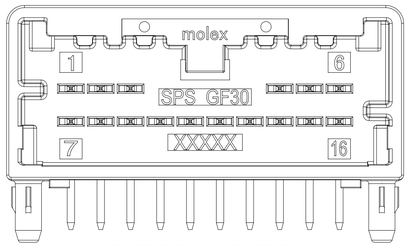

16CKT POLARIZATION A

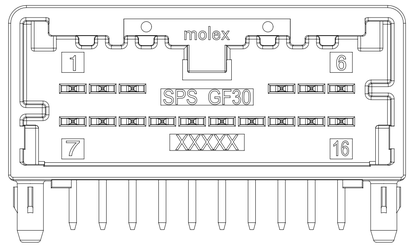

16CKT POLARIZATION B

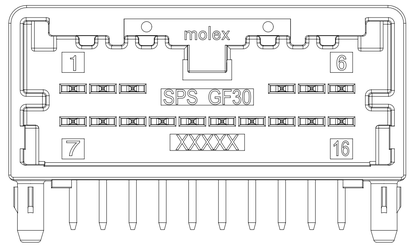

16CKT POLARIZATION C

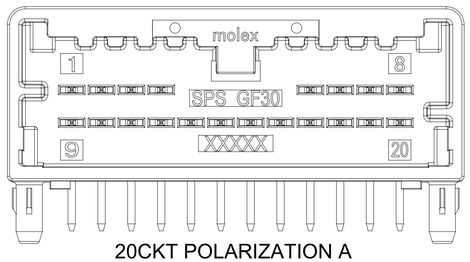

20CKT POLARIZATION A

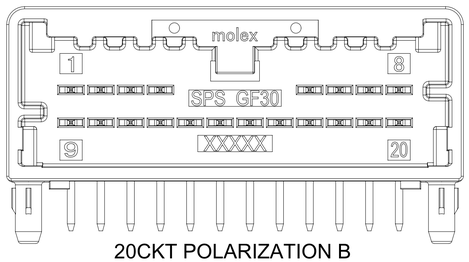

20CKT POLARIZATION B

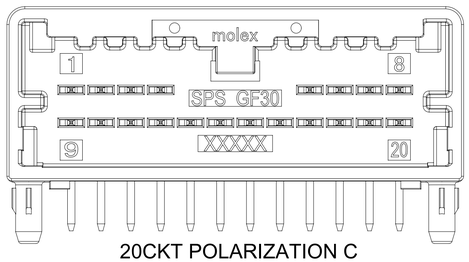

20CKT POLARIZATION C

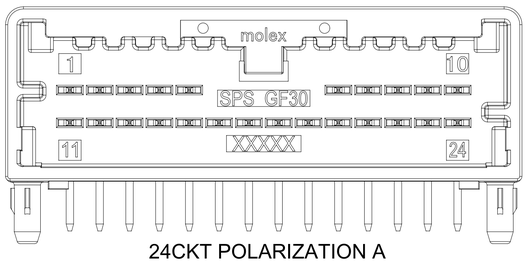

24CKT POLARIZATION A

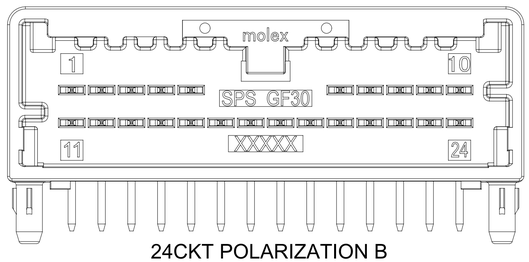

24CKT POLARIZATION B

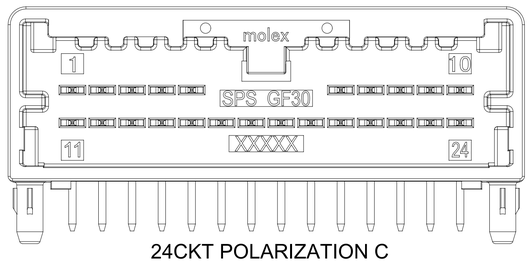

24CKT POLARIZATION C

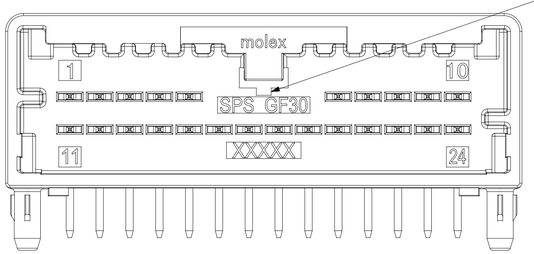

V0 IDENTIFIER
APPLIES FOR 12-24CKT

NOTES: VALID UNLESS OTHERWISE SPECIFIED

1. GENERAL:
   a. APPLICATION SPECIFICATION SEE: AS-34791-020
   b. PRODUCT SPECIFICATION SEE: PS-34791-020
   c. PACKAGING SPECIFICATION PER MOLEX DRAWING: SEE CHART
   d. SOLDERABILITY PER SMES-152
   e. PARTS MUST BE IN COMPLIANCE TO MOLEX CHEMICAL SUBSTANCES FOR PRODUCTS AND PACKAGING SPECIFICATION: QEHS-699000-300
   f. DATA MUST BE SUBMITTED UNDER THE MOLEX PART NUMBER TO IMDS (COMPANY ID#13255)
   g. FLAMMABILITY REQUIREMENT: PER ISO3795 OR GM3191
   h. VISUAL DEFECTS SHALL MEET COSMETIC STANDARD PS-45499-002 (Class B)

2. DESIGN - MATERIALS:
   a. SHROUD (PLASTIC HOUSING): SPS 30% GF, 20% REGRIND MAX PER WEIGHT
   b. BLADES:
      BASE METAL: C260 BRASS
      PLATING REQUIREMENTS:
      TIN OVER NICKEL:
      UNDERPLATING:
      OVERALL NICKEL
      OVERPLATING:
      OVERALL TIN

3. DESIGN - GEOMETRY:
   a. THIS IS A 100% CAD GENERATED PART. THE CAD MATHEMATICAL DATA IS THE MASTER FOR THIS PART. FOR DIMENSIONAL OR ANY INFORMATION NOT SHOWN ON THIS DRAWING, ANALYZE THE CAD MODEL.
   b. GEOMETRIC DIMENSIONS AND TOLERANCES PER ASME Y14.5M - 2009
   c. GENERAL TOLERANCES: SEE TITLE BLOCK
   d. EDGES AND UNDIMENSIONED DETAILS PER ISO13715
   e. CORNERS SHOWN AS SHARP TO BE R 0.1 MAX
   f. LETTERING SHALL BE 0.10 MAX RAISED. THIS INCLUDES RECYCLING CODE, PLANT AND CAVITY ID, VENDOR ID, AND CIRCUIT ID.
   g. COMPATIBLE WITH USCAR INTERFACE EXCEPT PIN TIP
      12 WAY: 050-U-012-2-ZXX
      16 WAY: 050-U-016-2-ZXX
      20 WAY: 050-U-020-2-ZXX
      24 WAY: 050-U-024-2-ZXX

REV	DESCRIPTION
H7	PAGE 4: UPDATED P/N 34826-0207/34826-8207/34826-9207 VOIDED CIRCUITS NUMBER
H6	PAGE 1: UPDATED NOTE 3.g DESCRIPTION PAGE 4: ADD NEW P/N 34826-0207/34826-8207/34826-9207 AND ADDED NEW COLUMNS TO SHOW VOIDED CIRCUITS FOR 20CKT
H5	PAGE 4: BOM STATUS REMOVED - ALL PARTS ARE AVAILABLE ADDED MATING COMPONENT SD INFO
H4	VIEWS UPDATED, NO DIM OR GEOMETRY CHANGES
H3	PAGE 1: ADDED V0 VIEW PAGE 4: REMOVED PBT MATING COMPONENT PNs FROM BOM PAGE 5: REMOVED
H2	PAGE 2: ADDED DIMS 8A, 10A, 12A, 14A, 19A PAGE 4 & 5: ADDED V0 P/N
H1	PAGE 1: ADDED NOTE 3g
H	DRAWING REMASTED PAGE 2: CORRECTED DUPLICATE DIM 19 UPDATED DIM NUMBERING 19 & 20 TO 20 & 21 PAGE 4: ADDED 12CKT GREEN POL A TO P/N TABLE
G5	UPDATED VIEWS TO MATCH CURRENT PRODUCTION. DIMS AND GEOMETRY DID NOT CHANGE

INSPECTION BALLON NUMBER LOG
PER DRAWING REVISION: H6

LAST BALLOON USED: 21

ADDED BALLOON NUMBERS:

REMOVED BALLOON NUMBERS:

THIS DRAWING CONTAINS INFORMATION THAT IS PROPRIETARY TO MOLEX ELECTRONIC TECHNOLOGIES, LLC AND SHOULD NOT BE USED WITHOUT WRITTEN PERMISSION

FUNCTIONAL SYMBOLS
FA = 0
FC = 0
FE = 0
DIVISIONAL SYMBOLS

DIMENSION UNITS	SCALE
mm	5:1

GENERAL TOLERANCES (UNLESS SPECIFIED)

ANGULAR TOL	± 3'
4 PLACES	±
3 PLACES	±
2 PLACES	± 0.100
1 PLACE	± 0.20
0 PLACES	±

DRAFT WHERE APPLICABLE MUST REMAIN WITHIN DIMENSIONS

CURRENT REV DESC:

STATUS: Production
DRWN: Gang Li 2023-09-20
CHK'D: Shanks Wu 2023-09-20
APPR: Colin Zhang 2023-09-25

molex

MINI50 12-24CKT R/A SALES DRAWING

PRODUCT SALES DRAWING

DOCUMENT NUMBER	DOC TYPE	DOC PART	REVISION
SD-34826-001	PSD	001	H7

THIRD ANGLE PROJECTION	DRAWING	SERIES	MATERIAL NUMBER	CUSTOMER	SHEET NUMBER
	D-SIZE	34826		GENERAL MARKET	1 OF 4

12 CIRCUIT

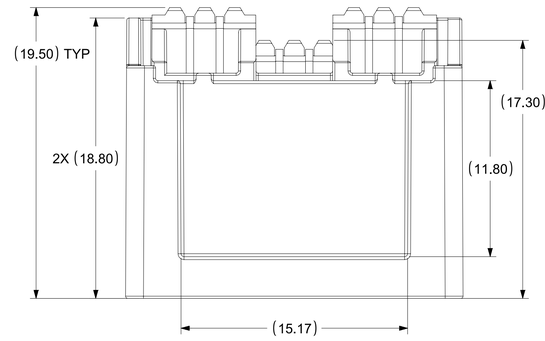

16 CIRCUIT

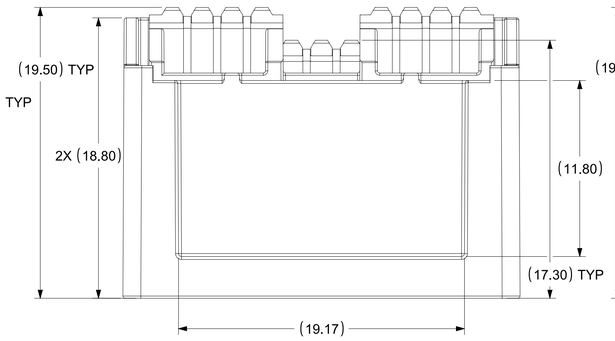

20 CIRCUIT

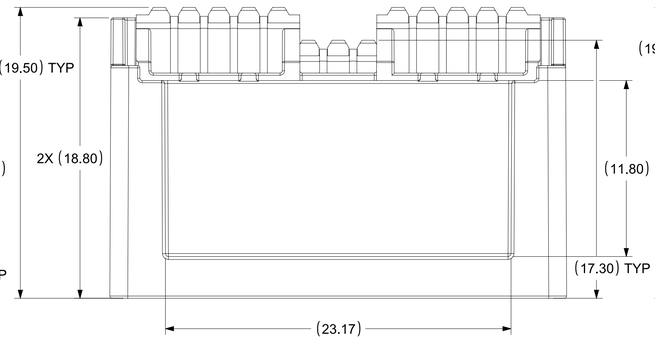

24 CIRCUIT

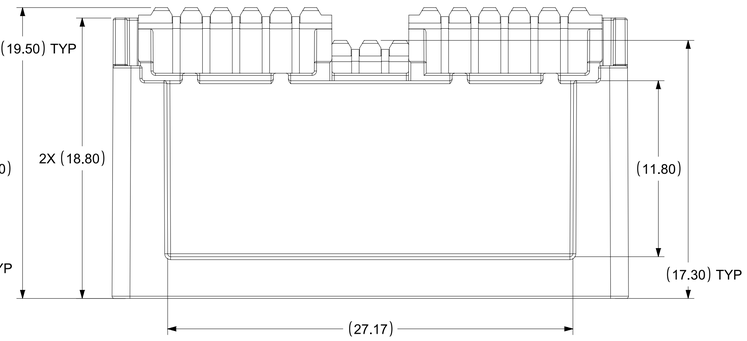

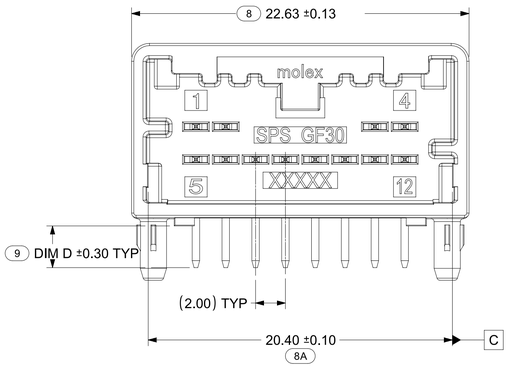

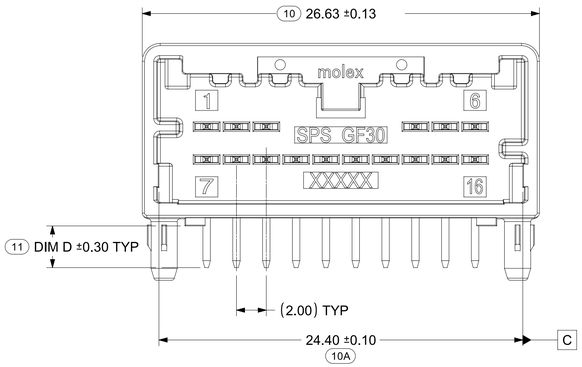

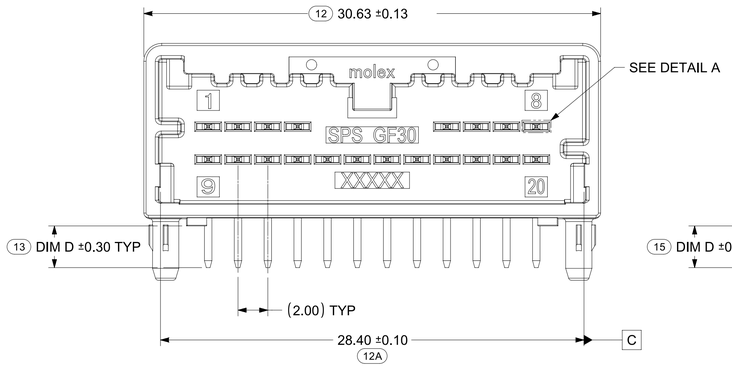

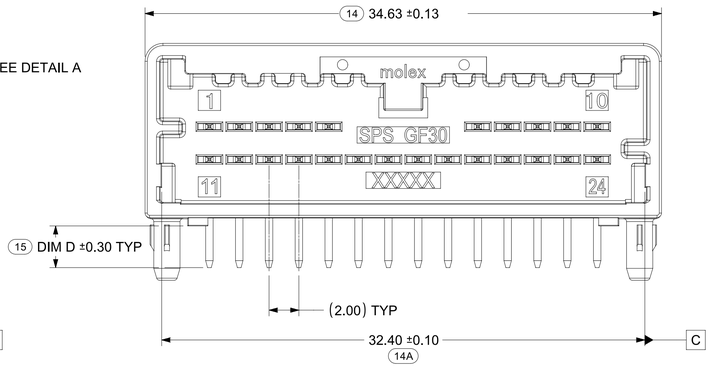

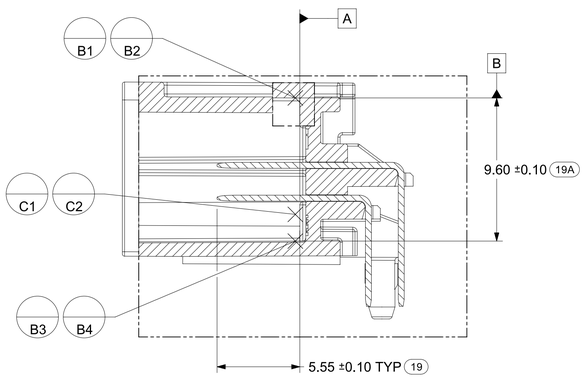

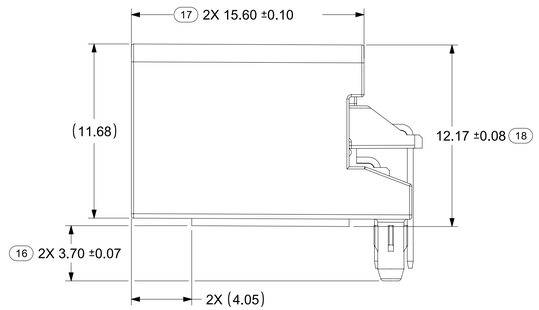

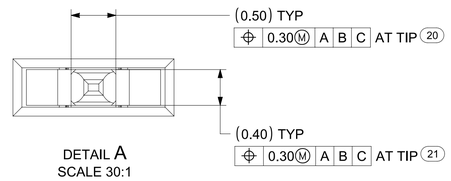

DETAIL A
SCALE 30:1

THIS DRAWING CONTAINS INFORMATION THAT IS PROPRIETARY TO MOLEX ELECTRONIC TECHNOLOGIES, LLC AND SHOULD NOT BE USED WITHOUT WRITTEN PERMISSION

FUNCTIONAL SYMBOLS	FA = 0, FC = 0, FP = 0
DIVISIONAL SYMBOLS	
DIMENSION UNITS	mm
SCALE	5:1
GENERAL TOLERANCES (UNLESS SPECIFIED)	
ANGULAR TOL	± 3°
4 PLACES	±
3 PLACES	±
2 PLACES	± 0.100
1 PLACE	± 0.20
0 PLACES	±
DRAFT WHERE APPLICABLE MUST REMAIN WITHIN DIMENSIONS	
CURRENT REV DESC:	
STATUS:	Production
DRWN:	Gang Li 2023-09-20
CHK'D:	Shanks Wu 2023-09-20
APPR:	Colin Zhang 2023-09-25
THIRD ANGLE PROJECTION	
DRAWING	D-SIZE
SERIES	34826

molex

MINI50 12-24CKT R/A SALES DRAWING

PRODUCT SALES DRAWING

DOCUMENT NUMBER	DOC TYPE	DOC PART	REVISION
SD-34826-001	PSD	001	H7

MATERIAL NUMBER	CUSTOMER	SHEET NUMBER
	GENERAL MARKET	2 OF 4

TEMPLATE TS-0xxx-xx-02
REVISION: B
DATE: 2022/08/01

PCB LAYOUT

BOARD SHOWN FOR REFERENCE ONLY

POST HOLE TABLE

	DIM E
PRESS FIT	2.15
DROP IN	2.55

12 CIRCUIT

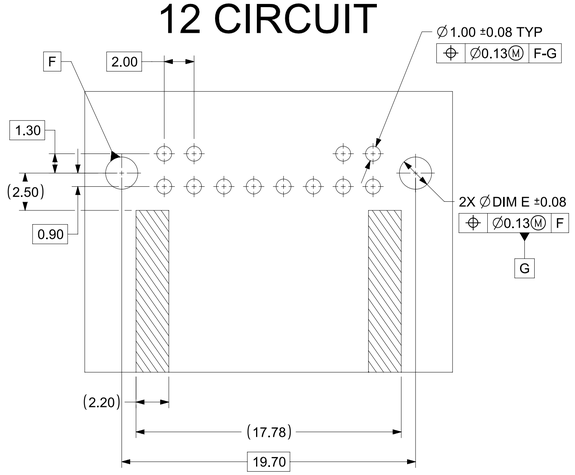

16 CIRCUIT

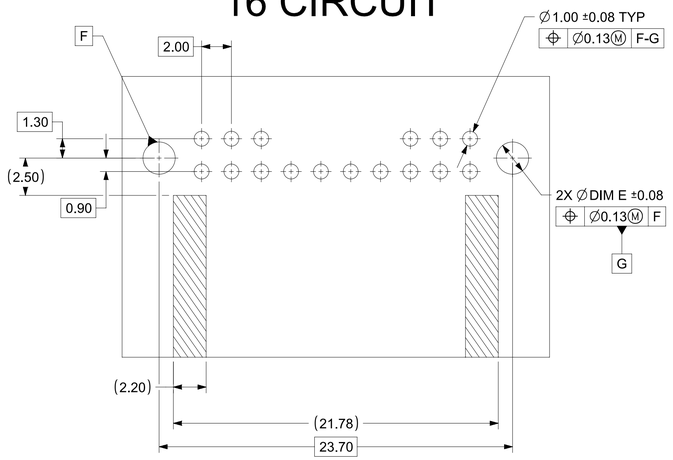

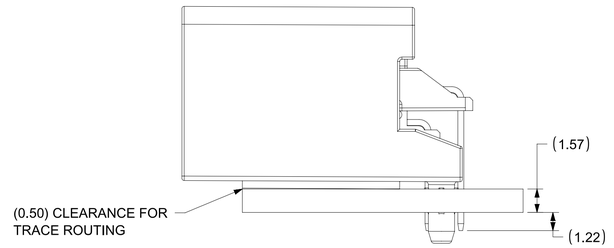

20 CIRCUIT

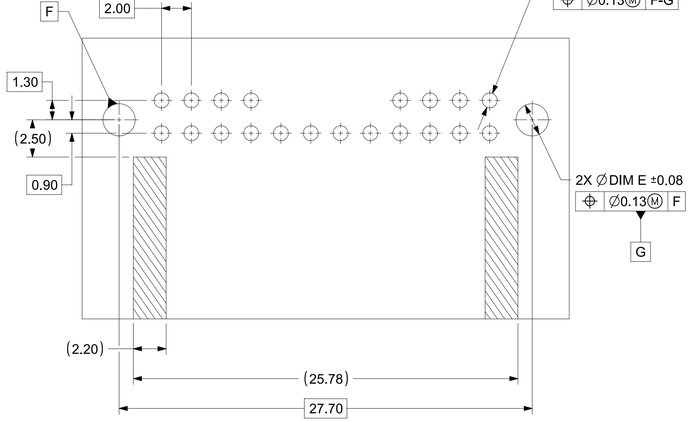

24 CIRCUIT

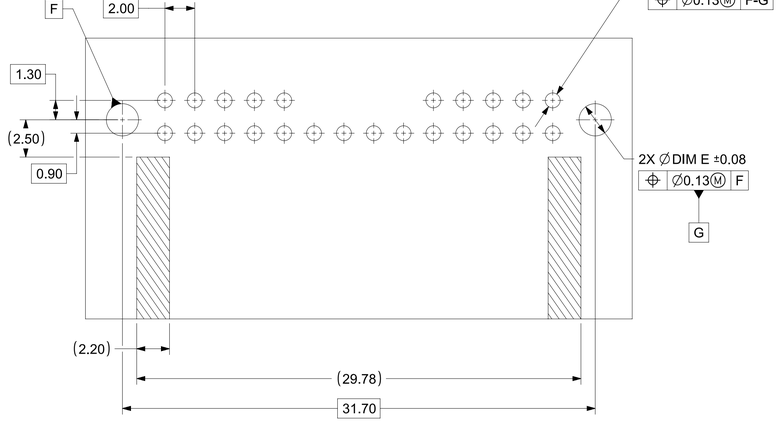

FUNCTIONAL SYMBOLS	THIS DRAWING CONTAINS INFORMATION THAT IS PROPRIETARY TO MOLEX ELECTRONIC TECHNOLOGIES, LLC AND SHOULD NOT BE USED WITHOUT WRITTEN PERMISSION		
FA = 0	DIMENSION UNITS: mm	SCALE: 5:1	CURRENT REV DESC:
FC = 0	GENERAL TOLERANCES (UNLESS SPECIFIED)		
FP = 0	ANGULAR TOL ± 3°		
DIVISIONAL SYMBOLS	4 PLACES ±		
	3 PLACES ±		
	2 PLACES ± 0.100		
	1 PLACE ± 0.20		
	0 PLACES ±		
	DRAFT WHERE APPLICABLE MUST REMAIN WITHIN DIMENSIONS		

STATUS: Production

DRWN: Gang Li 2023-09-20

CHK'D: Shanks Wu 2023-09-20

APPR: Colin Zhang 2023-09-25

THIRD ANGLE PROJECTION | DRAWING: D-SIZE | SERIES: 34826

molex

MINI50 12-24CKT R/A SALES DRAWING

PRODUCT SALES DRAWING

DOCUMENT NUMBER	DOC TYPE	DOC PART	REVISION
SD-34826-001	PSD	001	H7

MATERIAL NUMBER | CUSTOMER: GENERAL MARKET | SHEET NUMBER: 3 OF 4

MINI50 RIGHT ANGLE HEADER ASSEMBLIES

CIRCUIT	DIM D	POL	COLOR	MATERIAL NUMBER TAPE AND REEL PACKAGING PK-47799-0001	MATERIAL NUMBER TUBE PACKAGING PK-31301-688	MATERIAL NUMBER TRAY PACKAGING PK-31301-440	BLADE PLATING	FLAMMABILITY	VOIDED CIRCUITS (H6)
12	2.80	A	BLACK	34826-8124	34826-9124	34826-0124	TIN	HB	N/A
		A	GREEN	34826-8127	34826-9127	N/A	TIN		
		B	GRAY	34826-8125	34826-9125	34826-0125	TIN		
		C	DARK GRAY	34826-8126	34826-9126	34826-0126	TIN		
16	2.80	A	BLACK	34826-8160	34826-9160	34826-0160	TIN	HB	N/A
		B	GRAY	34826-8161	34826-9161	34826-0161	TIN		
		C	DARK GRAY	34826-8162	34826-9162	34826-0162	TIN		
	3.30	A	BLACK	34826-8164	34826-9164	34826-0164	TIN		
		B	GRAY	34826-8165	34826-9165	34826-0165	TIN		
		C	DARK GRAY	34826-8166	34826-9166	34826-0166	TIN		
20	2.80	A	BLACK	34826-8200	34826-9200	34826-0200	TIN	HB	N/A
		B	GRAY	34826-8201	34826-9201	34826-0201	TIN		N/A
		C	DARK GRAY	34826-8202	34826-9202	34826-0202	TIN		N/A
		A	BLACK	34826-8207	34826-9207	34826-0207	TIN		6, 18 (H7)
	3.30	A	BLACK	34826-8204	34826-9204	34826-0204	TIN		N/A
		B	GRAY	34826-8205	34826-9205	34826-0205	TIN		N/A
		C	DARK GRAY	34826-8206	34826-9206	34826-0206	TIN		N/A
24	2.80	A	BLACK	34826-8240	34826-9240	34826-0240	TIN	HB	N/A
		B	GRAY	34826-8241	34826-9241	34826-0241	TIN		
		C	DARK GRAY	34826-8242	34826-9242	34826-0242	TIN		
12	2.80	A	BLACK	215427-8124	215427-9124	215427-0124	TIN	V0	N/A
		B	GRAY	215427-8125	215427-9125	215427-0125	TIN		
		C	DARK GRAY	215427-8126	215427-9126	215427-0126	TIN		
16	2.80	A	BLACK	215427-8160	215427-9160	215427-0160	TIN	V0	N/A
		B	GRAY	215427-8161	215427-9161	215427-0161	TIN		
		C	DARK GRAY	215427-8162	215427-9162	215427-0162	TIN		
20	2.80	A	BLACK	215427-8200	215427-9200	215427-0200	TIN	V0	N/A
		B	GRAY	215427-8201	215427-9201	215427-0201	TIN		
		C	DARK GRAY	215427-8202	215427-9202	215427-0202	TIN		
24	2.80	A	BLACK	215427-8240	215427-9240	215427-0240	TIN	V0	N/A
		B	GRAY	215427-8241	215427-9241	215427-0241	TIN		
		C	DARK GRAY	215427-8242	215427-9242	215427-0242	TIN		

MATING COMPONENTS

FOR ALL MATING COMPONENT PART NUMBERS SEE THE FOLLOWING SALES DRAWINGS

- GEN I RECEPTACLE ONLY: SD-34824-002
- GEN I RECEPTACLE WITH CPA: SD-34824-003
- GEN II: 2065230000

THIS DRAWING CONTAINS INFORMATION THAT IS PROPRIETARY TO MOLEX ELECTRONIC TECHNOLOGIES, LLC AND SHOULD NOT BE USED WITHOUT WRITTEN PERMISSION

FUNCTIONAL SYMBOLS: FA = 0, FC = 0, FP = 0

DIVISIONAL SYMBOLS

DIMENSION UNITS: mm | SCALE: 1:1

GENERAL TOLERANCES (UNLESS SPECIFIED)

ANGULAR TOL	± 3'
4 PLACES	±
3 PLACES	±
2 PLACES	± 0.100
1 PLACE	± 0.20
0 PLACES	±

DRAFT WHERE APPLICABLE MUST REMAIN WITHIN DIMENSIONS

CURRENT REV DESC:

STATUS: Production

DRWN:	Gang Li	2023-09-20
CHK'D:	Shanks Wu	2023-09-20
APPR:	Colin Zhang	2023-09-25

THIRD ANGLE PROJECTION | DRAWING: D-SIZE | SERIES: 34826

molex

MINI50 12-24CKT R/A SALES DRAWING

PRODUCT SALES DRAWING

DOCUMENT NUMBER	DOC TYPE	DOC PART	REVISION
SD-34826-001	PSD	001	H7

MATERIAL NUMBER | CUSTOMER: GENERAL MARKET | SHEET NUMBER: 4 OF 4