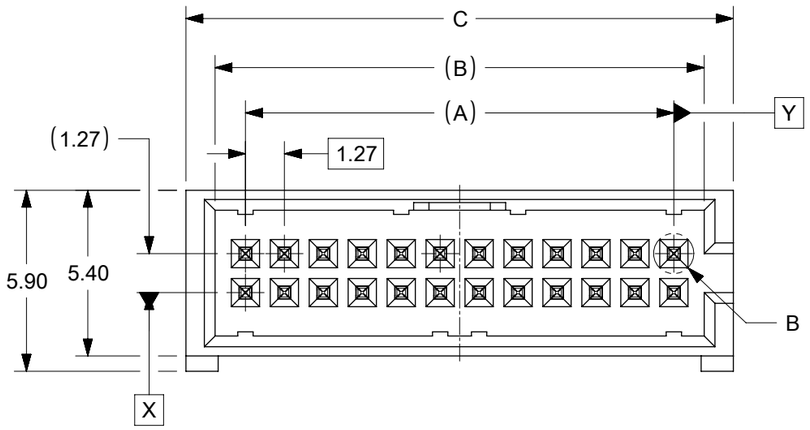


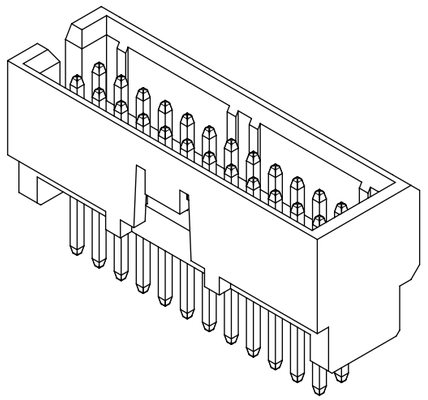

| CKT SIZE | DIMENSION | | | | | |
|---|---|---|---|---|---|---|
| | A | B | C | D | E | F |
| 4 | 1.27 | 3.25 | 5.15 | - | 3.05 | 3.04 |
| 6 | 2.54 | 4.52 | 6.42 | 4.85 | 4.32 | 4.31 |
| 8 | 3.81 | 5.79 | 7.69 | 4.85 | 5.59 | 5.58 |
| 10 | 5.08 | 7.06 | 8.96 | 4.85 | 6.86 | 6.85 |
| 12 | 6.35 | 8.33 | 10.23 | 4.85 | 8.13 | 8.12 |
| 14 | 7.62 | 9.60 | 11.50 | 4.85 | 9.40 | 9.39 |
| 16 | 8.89 | 10.87 | 12.77 | 4.85 | 10.67 | 10.66 |
| 18 | 10.16 | 12.14 | 14.04 | 4.85 | 11.94 | 11.93 |
| 20 | 11.43 | 13.41 | 15.31 | 4.85 | 13.21 | 13.20 |
| 22 | 12.70 | 14.68 | 16.58 | 4.85 | 14.48 | 14.47 |
| 24 | 13.97 | 15.95 | 17.85 | 4.85 | 15.75 | 15.74 |

| DIMENSION G TAIL LENGTH | RECOMMENDED PCB THICKNESS |
|---|---|
| 1.60 | 1.60 |
| 2.40 | 2.40 |
| 3.00 | 3.00 |

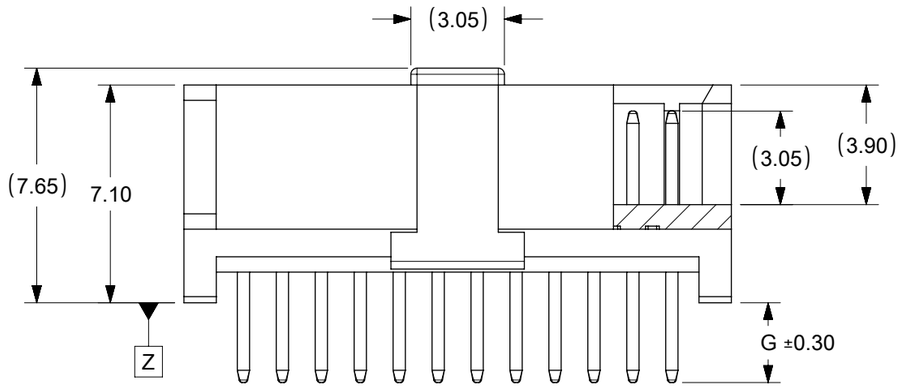


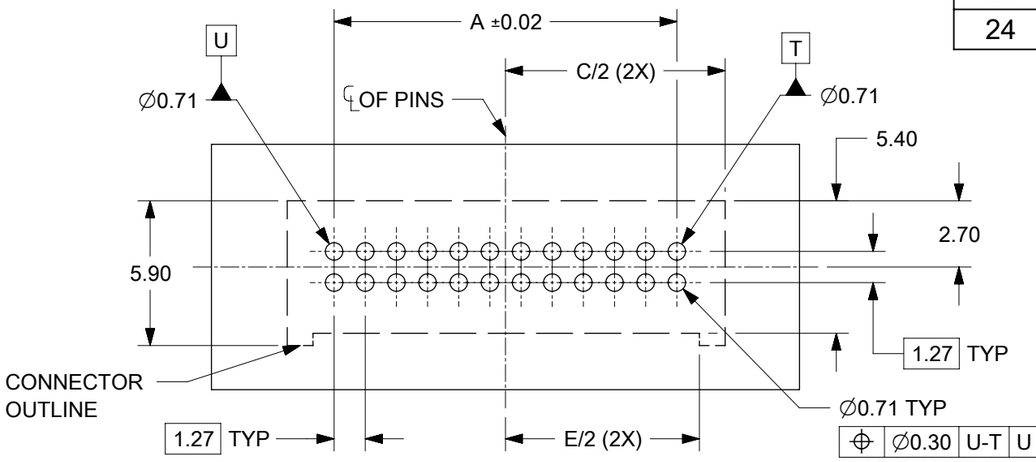


RECOMMENDED PCB LAYOUT
TOLERANCE ±0.05

(PAD DIAMETER OF 0.98MM MAX
OR 0.10MAX PAD WIDTH)

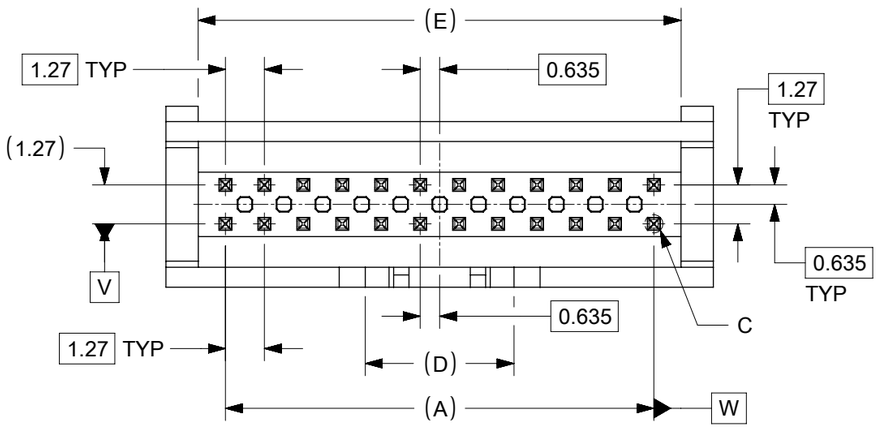


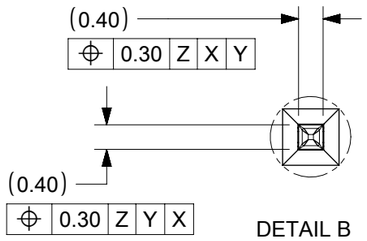


DETAIL B
SCALE 10:1

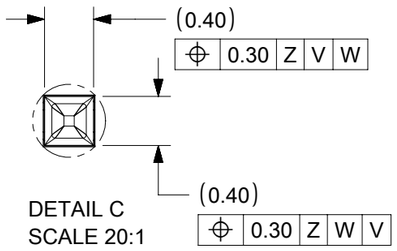


DETAIL C
SCALE 20:1

NOTES:
1. FOR ILLUSTRATION PURPOSES, 24 CIRCUIT SIZE WAFER IS SHOWN.
2. MATERIAL :
   HOUSING : LCP, GLASS-FILLED, UL94V-0, BLACK
   BANDOLIER PIN : 0.40MM SQ. COPPER ALLOY
3. FINISHES: SEE SHEET 2
4. PRODUCT SPECIFICATION: 2009890001_PS
5. PACKAGING SPECIFICATION: 2010220001_PK
6. POSITIIONING TO BE CONTROLLED BASED ON PIN TIP
7. REFER TO SHEET 2 FOR PART OPTION & PART NUMBER.
8. MATES WITH: 78120 SERIES
9 . PARTS CONFORMS TO CLASS "B" REQUIREMENT OF COSMETIC SPECIFICATION PS-45499-002
10. MOLEX LOGO AND CAVITY LOCATED AS SHOWN.
11. NON-FUNCTIONAL CORING IS SUBJECTED TO CHANGES WITHOUT NOTICE.

THIS DRAWING CONTAINS INFORMATION THAT IS PROPRIETARY TO MOLEX ELECTRONIC TECHNOLOGIES, LLC AND SHOULD NOT BE USED WITHOUT WRITTEN PERMISSION

| | |
|---|---|
| DIMENSION UNITS | mm |
| SCALE | NTS |
| GENERAL TOLERANCES (UNLESS SPECIFIED) | |
| ANGULAR TOL ± | 3.0 ° |
| 4 PLACES ± | |
| 3 PLACES ± | |
| 2 PLACES ± | 0.2 |
| 1 PLACE ± | |
| 0 PLACES ± | |
| DRAFT WHERE APPLICABLE MUST REMAIN WITHIN DIMENSIONS | |

CURRENT REV DESC: REMASTERED & BTB DISTANCE UPDATE

EC NO: 664214
DRWN: SCHEONG 2017/09/14
CHK'D: ABABUPS 2021/05/18
APPR: MRAMAKRISHNA 2021/05/18

INITIAL REVISION:
DRWN: SCHEONG 2016/02/22
APPR: KHLIM 2016/11/24

THIRD ANGLE PROJECTION | DRAWING: A3-SIZE | SERIES: 201022

molex

1.27MM PITCH SLIM-GRID
VERTICAL THROUGH HOLE SHROUDED HEADER

PRODUCT CUSTOMER DRAWING

| DOCUMENT NUMBER | DOC TYPE | DOC PART | REVISION |
|---|---|---|---|
| 2010220024 | PSD | 000 | A3 |

| MATERIAL NUMBER | CUSTOMER | SHEET NUMBER |
|---|---|---|
| SEE TABLE | GENERAL MARKET | 1 OF 3 |

| DOCUMENT STATUS | P1 | RELEASE DATE | 2021/05/18 14:43:00 |
|---|---|---|---|

FORMAT: master-tb-prod-A3
REVISION: J
DATE: 2020/01/14

| CKT SIZE | PIN TAIL LENGTH, G=1.60 ASSEMBLY WITHOUT CAP P/N | PIN TAIL LENGTH, G=1.60 ASSEMBLY WITH CAP P/N | PIN TAIL LENGTH, G=2.40 ASSEMBLY WITHOUT CAP P/N | PIN TAIL LENGTH, G=2.40 ASSEMBLY WITH CAP P/N | PIN TAIL LENGTH, G=3.00 ASSEMBLY WITHOUT CAP P/N | PIN TAIL LENGTH, G=3.00 ASSEMBLY WITH CAP P/N |
|---|---|---|---|---|---|---|
| 4 | 201022-0004 | 201022-3004 | 201022-1004 | 201022-4004 | 201022-2004 | 201022-5004 |
| | 201022-0104 | 201022-3104 | 201022-1104 | 201022-4104 | 201022-2104 | 201022-5104 |
| | 201022-0204 | 201022-3204 | 201022-1204 | 201022-4204 | 201022-2204 | 201022-5204 |
| 6 | 201022-0006 | 201022-3006 | 201022-1006 | 201022-4006 | 201022-2006 | 201022-5006 |
| | 201022-0106 | 201022-3106 | 201022-1106 | 201022-4106 | 201022-2106 | 201022-5106 |
| | 201022-0206 | 201022-3206 | 201022-1206 | 201022-4206 | 201022-2206 | 201022-5206 |
| 8 | 201022-0008 | 201022-3008 | 201022-1008 | 201022-4008 | 201022-2008 | 201022-5008 |
| | 201022-0108 | 201022-3108 | 201022-1108 | 201022-4108 | 201022-2108 | 201022-5108 |
| | 201022-0208 | 201022-3208 | 201022-1208 | 201022-4208 | 201022-2208 | 201022-5208 |
| 10 | 201022-0010 | 201022-3010 | 201022-1010 | 201022-4010 | 201022-2010 | 201022-5010 |
| | 201022-0110 | 201022-3110 | 201022-1110 | 201022-4110 | 201022-2110 | 201022-5110 |
| | 201022-0210 | 201022-3210 | 201022-1210 | 201022-4210 | 201022-2210 | 201022-5210 |
| 12 | 201022-0012 | 201022-3012 | 201022-1012 | 201022-4012 | 201022-2012 | 201022-5012 |
| | 201022-0112 | 201022-3112 | 201022-1112 | 201022-4112 | 201022-2112 | 201022-5112 |
| | 201022-0212 | 201022-3212 | 201022-1212 | 201022-4212 | 201022-2212 | 201022-5212 |
| 14 | 201022-0014 | 201022-3014 | 201022-1014 | 201022-4014 | 201022-2014 | 201022-5014 |
| | 201022-0114 | 201022-3114 | 201022-1114 | 201022-4114 | 201022-2114 | 201022-5114 |
| | 201022-0214 | 201022-3214 | 201022-1214 | 201022-4214 | 201022-2214 | 201022-5214 |
| 16 | 201022-0016 | 201022-3016 | 201022-1016 | 201022-4016 | 201022-2016 | 201022-5016 |
| | 201022-0116 | 201022-3116 | 201022-1116 | 201022-4116 | 201022-2116 | 201022-5116 |
| | 201022-0216 | 201022-3216 | 201022-1216 | 201022-4216 | 201022-2216 | 201022-5216 |
| 18 | 201022-0018 | 201022-3018 | 201022-1018 | 201022-4018 | 201022-2018 | 201022-5018 |
| | 201022-0118 | 201022-3118 | 201022-1118 | 201022-4118 | 201022-2118 | 201022-5118 |
| | 201022-0218 | 201022-3218 | 201022-1218 | 201022-4218 | 201022-2218 | 201022-5218 |
| 20 | 201022-0020 | 201022-3020 | 201022-1020 | 201022-4020 | 201022-2020 | 201022-5020 |
| | 201022-0120 | 201022-3120 | 201022-1120 | 201022-4120 | 201022-2120 | 201022-5120 |
| | 201022-0220 | 201022-3220 | 201022-1220 | 201022-4220 | 201022-2220 | 201022-5220 |
| 22 | 201022-0022 | 201022-3022 | 201022-1022 | 201022-4022 | 201022-2022 | 201022-5022 |
| | 201022-0122 | 201022-3122 | 201022-1122 | 201022-4122 | 201022-2122 | 201022-5122 |
| | 201022-0222 | 201022-3222 | 201022-1222 | 201022-4222 | 201022-2222 | 201022-5222 |
| 24 | 201022-0024 | 201022-3024 | 201022-1024 | 201022-4024 | 201022-2024 | 201022-5024 |
| | 201022-0124 | 201022-3124 | 201022-1124 | 201022-4124 | 201022-2124 | 201022-5124 |
| | 201022-0224 | 201022-3224 | 201022-1224 | 201022-4224 | 201022-2224 | 201022-5224 |

# LEGEND

201022 - X X X X

**CKT SIZE**

04 = 4 CKTS
.
24 = 24 CKTS

**FINISHES**

0 = 0.05um Au MIN. GOLD ON CONTACT
AND 2.00um MIN. MATTE TIN ON SOLDERTAIL
OVER 1.27um MIN. NICKEL UNDERPLATE OVERALL
1 = 0.38um Au MIN. GOLD ON CONTACT
AND 2.00um MIN. MATTE TIN ON SOLDERTAIL
OVER 1.27um MIN. NICKEL UNDERPLATE OVERALL
2 = 0.76um Au MIN. GOLD ON CONTACT
AND 2.00um MIN. MATTE TIN ON SOLDERTAIL
OVER 1.27um MIN. NICKEL UNDERPLATE OVERALL

**PACKAGING TYPE AND TAIL LENGTH**

TUBE AND WITHOUT CAP
0 = 1.60 P.TAIL LENGTH
1 = 2.40 P.TAIL LENGTH
2 = 3.00 P.TAIL LENGTH

TUBE AND WITH CAP
3 = 1.60 P.TAIL LENGTH
4 = 2.40 P.TAIL LENGTH
5 = 3.00 P.TAIL LENGTH

TAPE & REEL (NOT TOOLED)
6 = 1.60 P.TAIL LENGTH
7 = 2.40 P.TAIL LENGTH
8 = 3.00 P.TAIL LENGTH

THIS DRAWING CONTAINS INFORMATION THAT IS PROPRIETARY TO MOLEX ELECTRONIC TECHNOLOGIES, LLC AND SHOULD NOT BE USED WITHOUT WRITTEN PERMISSION

| | |
|---|---|
| DIMENSION UNITS | mm |
| SCALE | NTS |
| GENERAL TOLERANCES (UNLESS SPECIFIED) | |
| ANGULAR TOL | ± 3.0 ° |
| 4 PLACES | ± |
| 3 PLACES | ± |
| 2 PLACES | ± 0.2 |
| 1 PLACE | ± |
| 0 PLACES | ± |
| DRAFT WHERE APPLICABLE MUST REMAIN WITHIN DIMENSIONS | |

CURRENT REV DESC: REMASTERED & BTB DISTANCE UPDATE

EC NO: 664214
DRWN: SCHEONG 2017/09/14
CHK'D: ABABUPS 2021/05/18
APPR: MRAMAKRISHNA 2021/05/18

INITIAL REVISION:
DRWN: SCHEONG 2016/02/22
APPR: KHLIM 2016/11/24

molex

1.27MM PITCH SLIM-GRID
VERTICAL THROUGH HOLE SHROUDED HEADER

PRODUCT CUSTOMER DRAWING

| DOCUMENT NUMBER | DOC TYPE | DOC PART | REVISION |
|---|---|---|---|
| 2010220024 | PSD | 000 | A3 |

| THIRD ANGLE PROJECTION | DRAWING | SERIES | MATERIAL NUMBER | CUSTOMER | SHEET NUMBER |
|---|---|---|---|---|---|
| | A3-SIZE | 201022 | SEE TABLE | GENERAL MARKET | 2 OF 3 |

| DOCUMENT STATUS | P1 | RELEASE DATE | 2021/05/18 14:43:00 |
|---|---|---|---|

FORMAT: master-tb-prod-A3
REVISION: J
DATE: 2020/01/14

BOARD TO BOARD (BTB) DISTANCE

| HEADER | MATES WITH (RECEPTACLE) | BTB DIST. | PICTORIAL VIEW |
|---|---|---|---|
| 201022 | 78120 | 7.81 | 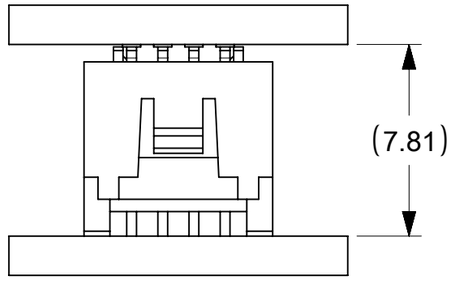 |



THIS DRAWING CONTAINS INFORMATION THAT IS PROPRIETARY TO MOLEX ELECTRONIC TECHNOLOGIES, LLC AND SHOULD NOT BE USED WITHOUT WRITTEN PERMISSION

| DIMENSION UNITS | SCALE |
|---|---|
| mm | NTS |

GENERAL TOLERANCES (UNLESS SPECIFIED)

| | |
|---|---|
| ANGULAR TOL | ± 3.0 ° |
| 4 PLACES | ± |
| 3 PLACES | ± |
| 2 PLACES | ± 0.2 |
| 1 PLACE | ± |
| 0 PLACES | ± |

DRAFT WHERE APPLICABLE MUST REMAIN WITHIN DIMENSIONS

CURRENT REV DESC: REMASTERED & BTB DISTANCE UPDATE

EC NO: 664214

| | | |
|---|---|---|
| DRWN: | SCHEONG | 2017/09/14 |
| CHK'D: | ABABUPS | 2021/05/18 |
| APPR: | MRAMAKRISHNA | 2021/05/18 |

INITIAL REVISION:

| | | |
|---|---|---|
| DRWN: | SCHEONG | 2016/02/22 |
| APPR: | KHLIM | 2016/11/24 |

molex

1.27MM PITCH SLIM-GRID
VERTICAL THROUGH HOLE SHROUDED HEADER

PRODUCT CUSTOMER DRAWING

| DOCUMENT NUMBER | DOC TYPE | DOC PART | REVISION |
|---|---|---|---|
| 2010220024 | PSD | 000 | A3 |

| THIRD ANGLE PROJECTION | DRAWING | SERIES | MATERIAL NUMBER | CUSTOMER | SHEET NUMBER |
|---|---|---|---|---|---|
| | A3-SIZE | 201022 | SEE TABLE | GENERAL MARKET | 3 OF 3 |

| DOCUMENT STATUS | P1 | RELEASE DATE | 2021/05/18 14:43:00 |
|---|---|---|---|

FORMAT: master-tb-prod-A3
REVISION: J
DATE: 2020/01/14