

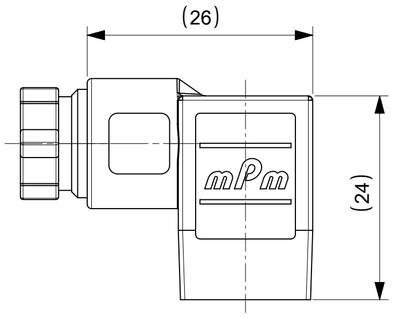

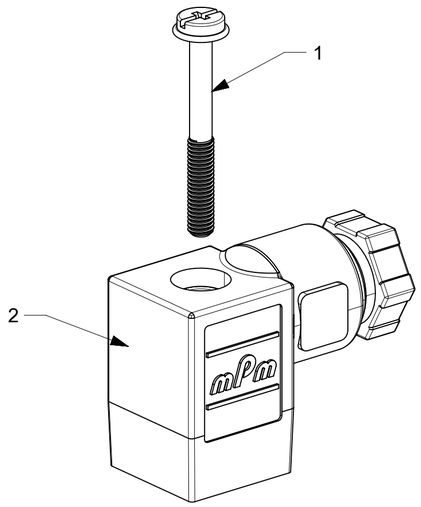

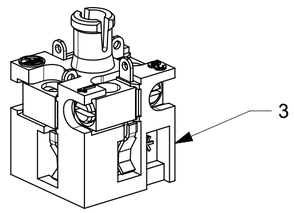

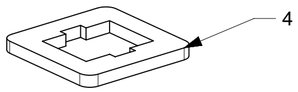

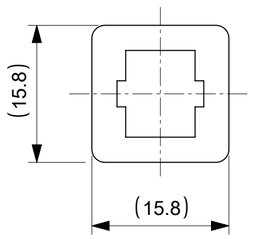

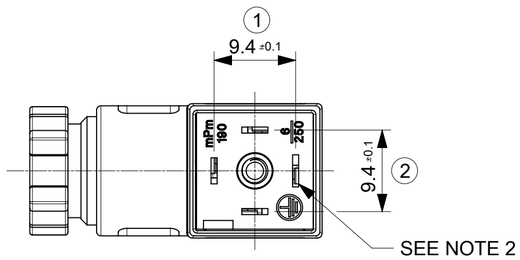

BOM

ITEM	DESCRIPTION
1	SCREW
2	COVER ASSEMBLY
3	INSERT ASSEMBLY
4	GASKET

C19207N21**

SERIES
C19= INTERNAL THREAD FORM C MICRO
POLES
2= 2 POLE, 3= 3 POLE
THREAD SIZE
07= PG7, M2= M12x1.5
HOUSING MATERIAL AND COLOR
G= PA6 GRAY, N= PA6 BLACK, W= PA6 BLACK V0, T= TRANSPARENT
GROUND POSITION
0= UNMOUNTED, 2= H12, 3= H3, 6= H6, 9= H9
SCREW AND GASKET
1= NBR PROFILE GASKET & SCREW
2= NBR FLAT GASKET & SCREW
3= WHITE SILICONE PROFILED GASKET & SCREW
4= WHITE SILICONE FLAT GASKET & SCREW
6= NBR FLAT GASKET, WITHOUT SCREW
A= NBR PROFILE GASKET & SCREW +2mm
B= NBR FLAT GASKET & SCREW +2mm
C= WHITE SILICONE PROFILED GASKET & SCREW +2mm
D= WHITE SILICONE FLAT GASKET & SCREW +2mm

NON STANDARD COMPONENTS
14= SINGLE PACKED IN NEUTRAL BAG
5N= SINGLE PACKED
6X= WITHOUT RING NUT OR CABLE FIXING NUT
P7= IP67 COMPLIANT
S6= CUSTOM SCREW M3x26
SA= UL LISTED
0217=3 BAGS OF 100PCS PER CARTON

NOTES:
1. PLEASE SEE SHEET 2 FOR CURRENTLY CONFIGURED PART NUMBERS
   FOR SPECIFIC PART NUMBERS PLEASE CONTACT SALES OR CONSULT
   THE INTELLIGENT PART NUMBERS IN THE TABLE ATTACHED
2. EARTH POSITION SHOWN. H12
3. FOR PACKAGING SEE PACKAGING SPEC PK-121023-C19
4. PRODUCT SPEC: SEE PS-121201-001
5. PART NO. 1210230465 SHOWN FOR ILLUSTRATION PURPOSE ONLY

LAST INSPECTION NO. 2

THIS DRAWING CONTAINS INFORMATION THAT IS PROPRIETARY TO MOLEX ELECTRONIC TECHNOLOGIES, LLC AND SHOULD NOT BE USED WITHOUT WRITTEN PERMISSION

DIMENSION UNITS	mm
SCALE	2:1
GENERAL TOLERANCES (UNLESS SPECIFIED)	
ANGULAR TOL ±	°
4 PLACES ±	
3 PLACES ±	
2 PLACES ±	0.1
1 PLACE ±	0.2
0 PLACES ±	
DRAFT WHERE APPLICABLE MUST REMAIN WITHIN DIMENSIONS	

CURRENT REV DESC: REMOVED OBSOLETED PART NUMBERS AS PER PCN#515183

EC NO: 826028
DRWN: SANATK1 2025/04/30
CHK'D: GGA 2025/06/30
APPR: GGA 2025/06/30

INITIAL REVISION:
DRWN: DSHEA 2011/05/18
APPR: EFOLAN 2011/06/08

molex

INTERNAL THREAD
C19 SERIES

PRODUCT CUSTOMER DRAWING

DOCUMENT NUMBER	DOC TYPE	DOC PART	REVISION
SD-121023-005	PSD	001	C2

THIRD ANGLE PROJECTION	DRAWING	SERIES	MATERIAL NUMBER	CUSTOMER	SHEET NUMBER
	A2-SIZE	121023	SEE TABLE	GENERAL MARKET	1 OF 2

DOCUMENT STATUS	P1	RELEASE DATE	2025/06/30 13:30:57

FORMAT: master-tb-prod-A2
REVISION: J1
DATE: 2021/05/01

PARTS LIST

PART NO	mPm PART NO	DESCRIPTION
1210230433	C19207N21	TYPE C MICRO 2P PG7 BLACK, NBR PROFILE GASKET & SCREW
1210230434	C19207N22	TYPE C MICRO 2P PG7 BLACK, NBR FLAT GASKET & SCREW
1210230435	C19207N26	TYPE C MICRO 2P PG7 BLACK, NBR FLAT GASKET & NO SCREW
1210230437	C19207N61	TYPE C MICRO 2P PG7 BLACK, NBR PROFILE GASKET & SCREW
1210230438	C19207N62	TYPE C MICRO 2P PG7 BLACK, NBR FLAT GASKET & SCREW
1210230441	C19207N6A	TYPE C MICRO 2P PG7 BLACK, NBR PROFILE GASKET & SCREW +2mm
1210230443	C19207N6B	TYPE C MICRO 2P PG7 BLACK, NBR FLAT GASKET & SCREW +2mm
1210230445	C19207N92	TYPE C MICRO 2P PG7 BLACK, NBR FLAT GASKET & SCREW
1210230447	C19207T22	TYPE C MICRO 2P PG7 TRANSPARENT, NBR FLAT GASKET & SCREW
1210230454	C19207W62	TYPE C MICRO 2P PG7 BLACK V0, NBR FLAT GASKET & SCREW
1210230464	C19307N21	TYPE C MICRO 3P PG7 BLACK, NBR PROFILE GASKET & SCREW
1210230465	C19307N22	TYPE C MICRO 3P PG7 BLACK, NBR FLAT GASKET & SCREW
1210230466	C19307N61	TYPE C MICRO 3P PG7 BLACK, NBR PROFILE GASKET & SCREW
1210230467	C19307N62	TYPE C MICRO 3P PG7 BLACK, NBR FLAT GASKET & SCREW
1210230469	C19307N64	TYPE C MICRO 3P PG7 BLACK, WHITE SILICONE FLAT GASKET & SCREW
1210230470	C19307N6A	TYPE C MICRO 3P PG7 BLACK, NBR PROFILE GASKET & SCREW +2mm
1210230472	C19307N6B	TYPE C MICRO 3P PG7 BLACK, NBR FLAT GASKET & SCREW +2mm
1210230474	C19307T22	TYPE C MICRO 3P PG7 TRANSPARENT, NBR FLAT GASKET & SCREW
1210230476	C19307T62	TYPE C MICRO 3P PG7 TRANSPARENT, NBR FLAT GASKET & SCREW
1210230672	C192M2N62	TYPE C MICRO 2P M12x1.5 BLACK, NBR FLAT GASKET & SCREW
1210230673	C193M2N62	TYPE C MICRO 3P M12x1.5 BLACK, NBR FLAT GASKET & SCREW
1210230693	C19307N23	TYPE C MICRO 3P PG7 BLACK, WHITE SILICONE PROFILE GASKET & SCREW
1210230752	C19307N24	TYPE C MICRO 3P PG7 BLACK, WHITE SILICONE FLAT GASKET & SCREW
1210230753	C192M2N21	TYPE C MICRO 2P M12x1.5 BLACK, NBR PROFILE GASKET & SCREW
1210240293	C19207N626X	TYPE C MICRO 2P PG7 BLACK, NBR FLAT GASKET & SCREW, W/O RING NUT
1210240307	C19207W6D	TYPE C MICRO 2P PG7 BLACK V0, WHITE SILICONE FLAT GASKET & SCREW +2mm
1210240938	C19307N21P7	TYPE C MICRO 3P PG7 BLACK, NBR PROFILE GASKET & SCREW, IP67 COMPLIANT
1210230651	C19207W62SA	TYPE C MICRO 2P PG7 BLACK V0, NBR FLAT GASKET & SCREW, UL LISTED
1210230818	C19207W21SA	TYPE C MICRO 2P PG7 BLACK V0, NBR PROFILE GASKET & SCREW, UL LISTED
1210230839	C19207W93SA	TYPE C MICRO 2P PG7 BLACK V0, WHITE SILICONE PROFILE GASKET & SCREW, UL LISTED
1210240937	C19307W22SA	TYPE C MICRO 3P PG7 BLACK V0, NBR FLAT GASKET & SCREW, UL LISTED
1210240884	C19207W620217S6	TYPE C MICRO 2P PG7 BLACK V0, H6 NBR FLAT GASKET & SCREW, THREE BAGS 100 PER BOX

THIS DRAWING CONTAINS INFORMATION THAT IS PROPRIETARY TO MOLEX ELECTRONIC TECHNOLOGIES, LLC AND SHOULD NOT BE USED WITHOUT WRITTEN PERMISSION

DIMENSION UNITS	mm
SCALE	1:1
GENERAL TOLERANCES (UNLESS SPECIFIED)	
ANGULAR TOL	± °
4 PLACES	±
3 PLACES	±
2 PLACES	± 0.1
1 PLACE	± 0.2
0 PLACES	±

DRAFT WHERE APPLICABLE MUST REMAIN WITHIN DIMENSIONS

CURRENT REV DESC: REMOVED OBSOLETED PART NUMBERS AS PER PCN#515183

EC NO: 826028

DRWN:	SANATK1	2025/04/30
CHK'D:	GGA	2025/06/30
APPR:	GGA	2025/06/30

INITIAL REVISION:

DRWN:	DSHEA	2011/05/18
APPR:	EFOLAN	2011/06/08

molex

INTERNAL THREAD
C19 SERIES

PRODUCT CUSTOMER DRAWING

DOCUMENT NUMBER	DOC TYPE	DOC PART	REVISION
SD-121023-005	PSD	001	C2

THIRD ANGLE PROJECTION	DRAWING	SERIES	MATERIAL NUMBER	CUSTOMER	SHEET NUMBER
	A2-SIZE	121023	SEE TABLE	GENERAL MARKET	2 OF 2

DOCUMENT STATUS	P1	RELEASE DATE	2025/06/30 13:30:57

FORMAT: master-tb-prod-A2
REVISION: 21
DATE: 2021/05/01