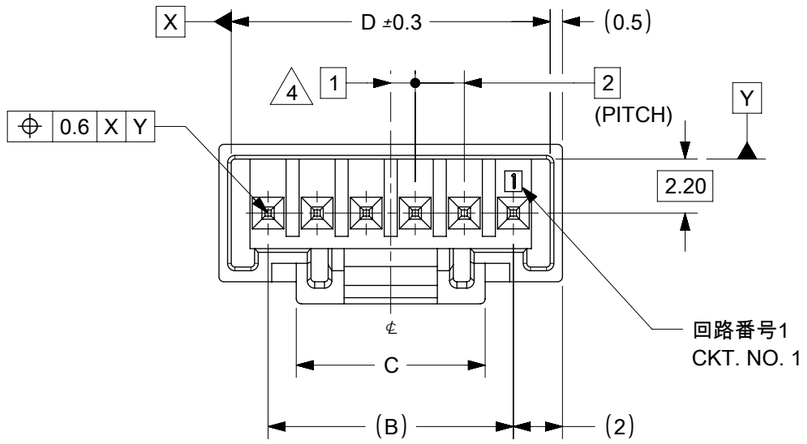

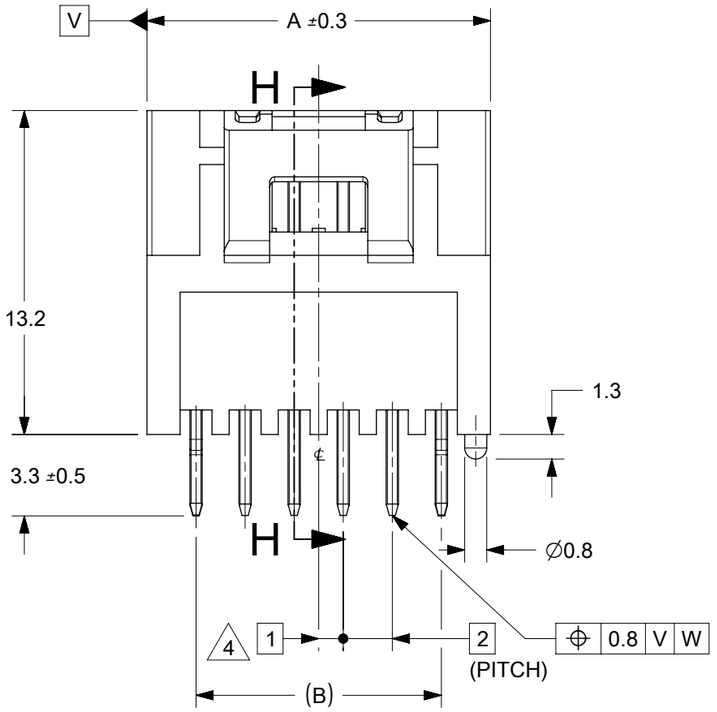

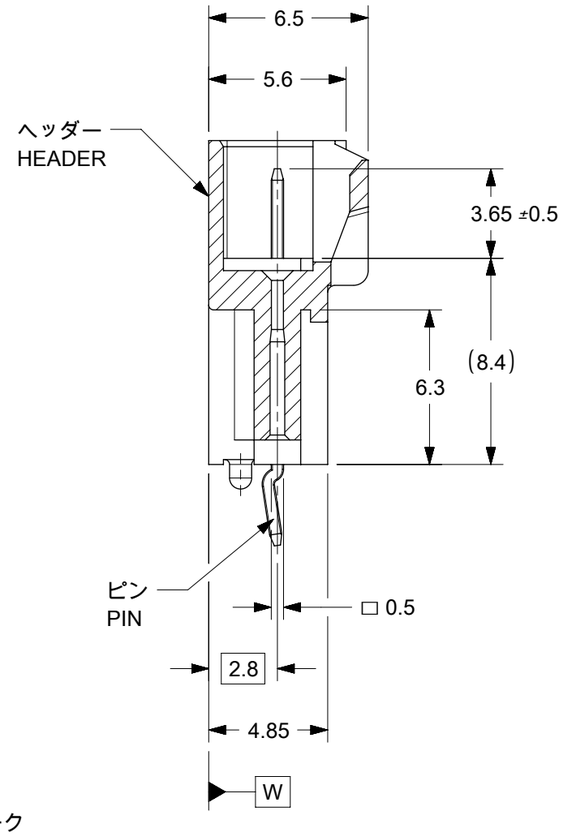

SECTION H-H

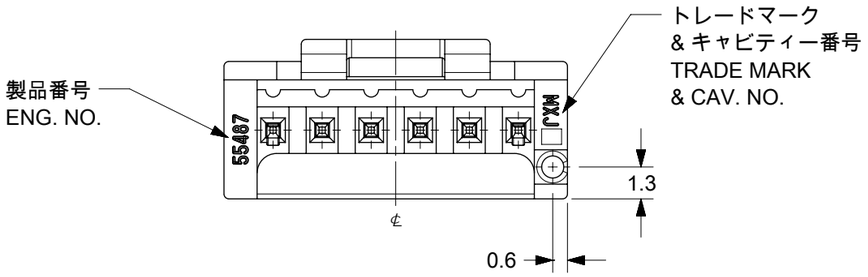

注記
NOTE

1. 材料　　MATERIAL
   ピン ： 黄銅 , 銅下地錫メッキ
   PIN ： BRASS, Sn OVER Cu PLATED
   ヘッダー ：66ナイロン (ガラス入り : 20%), UL94V-0
   (色 : 自然色 又は 染色)
   HEADER : NYLON66 (G.F. : 20%), UL94V-0
   (COLOR : NATURAL OR DYED COLOR)
2. 嵌合相手 ：51216シリ - ズ
   MATE WITH : 51216 SERIES
3. ソルダーテールキンクは、両端のピンのみとする。
   KINK TO BE APPLIED FOR 2 PINS AT BOTH ENDS.
4. 偶数極に適用。
   APPLY EVEN CIRCUIT PRODUCTS.
5. 本製品は　55487-**10/-**12/-**13/**14/**16 の鉛フリー品である。
   THIS PRODUCT IS LEAD FREE OF 55487-**10/-**12/-**13/-**14/-**16.

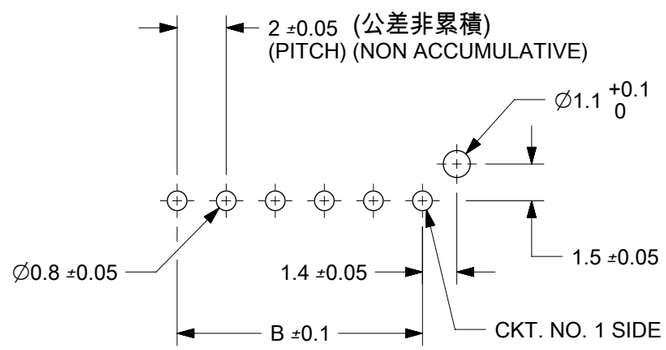

基板取付穴推奨寸法 (マウント面)
RECOMMENDED P.C.BOARD
HOLE DIMENSION
(MOUNTING SIDE)
(T=1.6)

THIS DRAWING CONTAINS INFORMATION THAT IS PROPRIETARY TO MOLEX ELECTRONIC TECHNOLOGIES, LLC AND SHOULD NOT BE USED WITHOUT WRITTEN PERMISSION

DIMENSION UNITS	mm
SCALE	4:1
GENERAL TOLERANCES (UNLESS SPECIFIED)	
ANGULAR TOL	± 3.0 °
4 PLACES	±
3 PLACES	±
2 PLACES	± 0.2
1 PLACE	± 0.2
0 PLACES	± 0.2
DRAFT WHERE APPLICABLE MUST REMAIN WITHIN DIMENSIONS	

CURRENT REV DESC: ADDED NEW PART NUMBER

EC NO: 834529
DRWN: MADHUP2 2025/09/16
CHK'D: SMURUGESAN 2025/09/16
APPR: SMURUGESAN 2025/09/16

INITIAL REVISION:
DRWN: MNABEI 2005/05/23
APPR: NUKITA 2005/05/25

THIRD ANGLE PROJECTION	DRAWING	SERIES
	A3-SIZE	55487

molex

MICROTPA 2.0 W/B
SINGLE ROW DIP VERTICAL HEADER ASSEMBLY

PRODUCT CUSTOMER DRAWING

DOCUMENT NUMBER	DOC TYPE	DOC PART	REVISION
SD-55487-007	PSD	001	E1

MATERIAL NUMBER	CUSTOMER	SHEET NUMBER
	GENERAL MARKET	1 OF 2

DOCUMENT STATUS	P1	RELEASE DATE	2025/11/10 05:36:22

FORMAT: master-tb-prod-A3
REVISION: J1
DATE: 2021/05/01

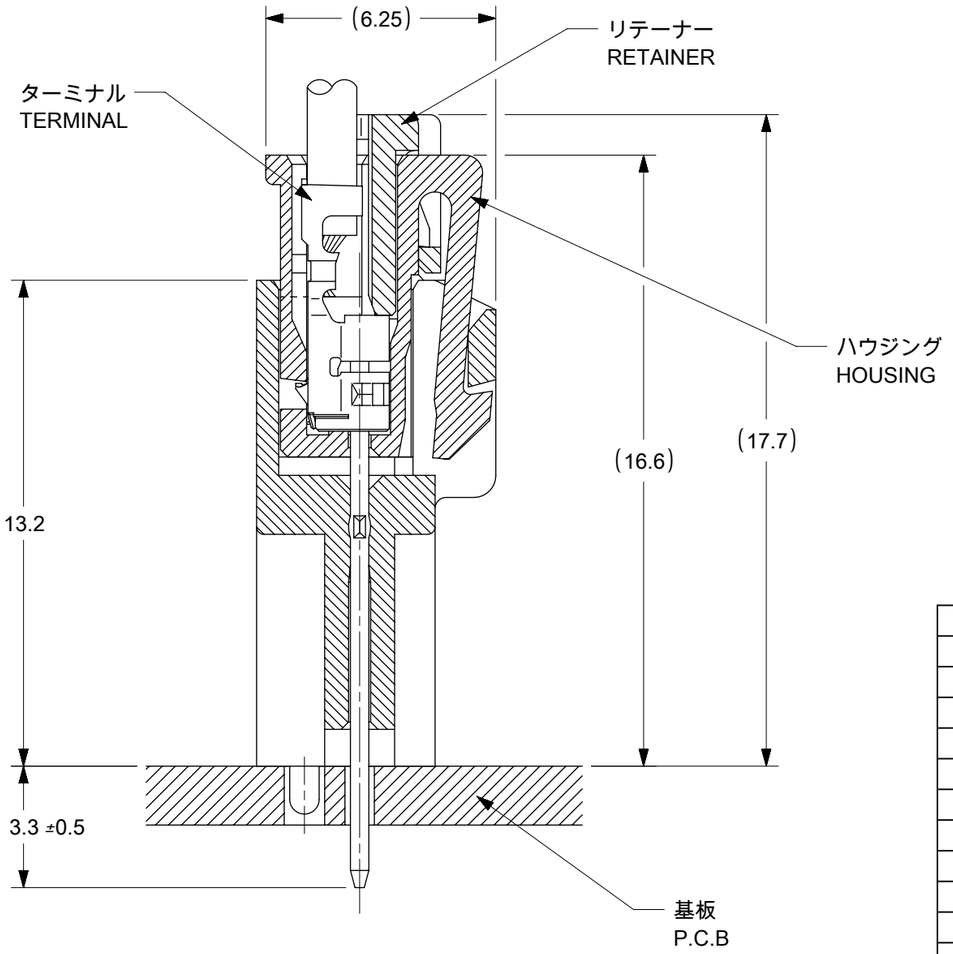

嵌合断面図 (参考)
LAYOUT OF EACH CKTS.

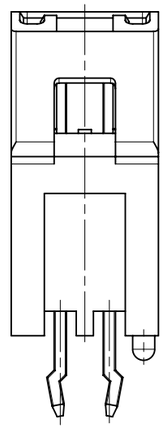

2 CKTS.

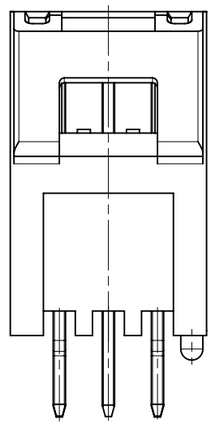

3 CKTS.

極数レイアウト図
LAYOUT OF EACK CKTS.

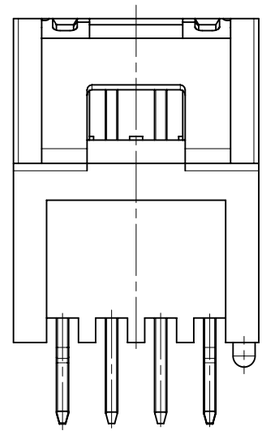

4 CKTS.

31	7.7	28	32					55487-1519	15
29	7.7	26	30					55487-1419	14
27	7.7	24	28					55487-1319	13
25	7.7	22	26			55487-1223		55487-1219	12
23	7.7	20	24					55487-1119	11
21	7.7	18	22					55487-1019	10
19	7.7	16	20					55487-0919	9
17	7.7	14	18					55487-0819	8
15	7.7	12	16					55487-0719	7
13	7.7	10	14					55487-0619	6
11	7.7	8	12				55487-0522	55487-0519	5
9	7.7	6	10					55487-0419	4
7	7.7	4	8			E1 55487-0323		55487-0319	3
5	6	2	6	55487-0226	55487-0224	55487-0223		55487-0219	2
D	C	B	A	COLOR : GREEN 色 : 緑	COLOR : BLUE 色 : 青	COLOR : YELLOW 色 : 黄	COLOR : RED 色 : 赤	COLOR : WHITE 色 : 白	CKT 極数
				TRAY PACKAGE					
				オーダー番号　ORDER NO.					
				CONNECTOR SERIES NO. 55487-****					

THIS DRAWING CONTAINS INFORMATION THAT IS PROPRIETARY TO MOLEX ELECTRONIC TECHNOLOGIES, LLC AND SHOULD NOT BE USED WITHOUT WRITTEN PERMISSION

DIMENSION UNITS	mm
SCALE	4:1
GENERAL TOLERANCES (UNLESS SPECIFIED)	
ANGULAR TOL	± 3.0 °
4 PLACES	±
3 PLACES	±
2 PLACES	± 0.2
1 PLACE	± 0.2
0 PLACES	± 0.2
DRAFT WHERE APPLICABLE MUST REMAIN WITHIN DIMENSIONS	

CURRENT REV DESC: ADDED NEW PART NUMBER

EC NO: 834529
DRWN: MADHUP2 2025/09/16
CHK'D: SMURUGESAN 2025/09/16
APPR: SMURUGESAN 2025/09/16

INITIAL REVISION:
DRWN: MNABEI 2005/05/23
APPR: NUKITA 2005/05/25

THIRD ANGLE PROJECTION | DRAWING: A3-SIZE | SERIES: 55487

molex

MICROTPA 2.0 W/B
SINGLE ROW DIP VERTICAL HEADER ASSEMBLY

PRODUCT CUSTOMER DRAWING

DOCUMENT NUMBER	DOC TYPE	DOC PART	REVISION
SD-55487-007	PSD	001	E1

MATERIAL NUMBER	CUSTOMER	SHEET NUMBER
	GENERAL MARKET	2 OF 2

DOCUMENT STATUS	P1	RELEASE DATE	2025/11/10 05:36:22

FORMAT: master-tb-prod-A3
REVISION: J1
DATE: 2021/05/01

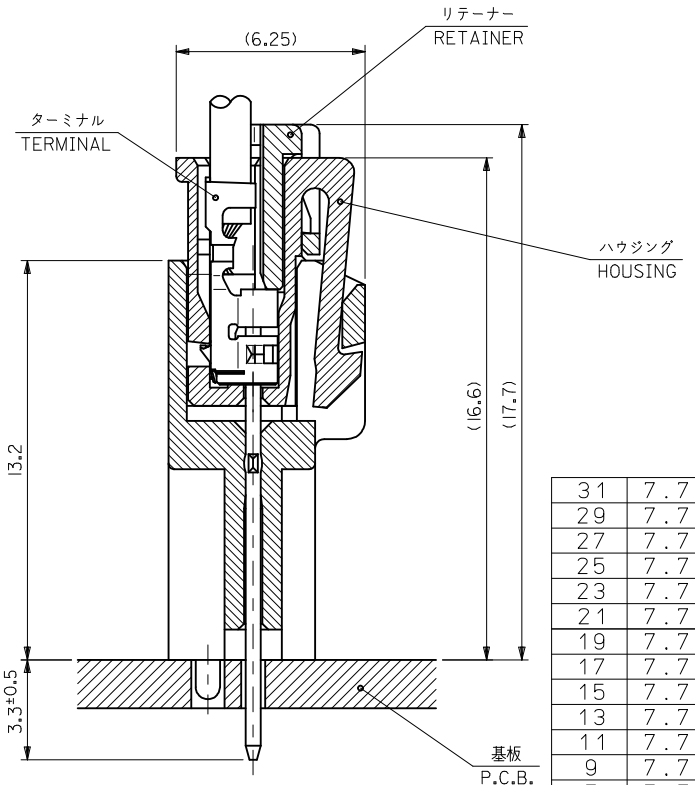

嵌合断面図（参考）
LAYOUT OF EACH CKTS.

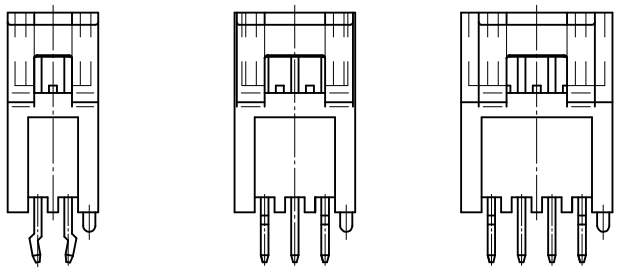

極数レイアウト図
LAYOUT OF EACH CKTS.

31	7.7	28	32	55487-1526		55487-1523	55487-1522	55487-1519	15
29	7.7	26	30	55487-1426		55487-1423	55487-1422	55487-1419	14
27	7.7	24	28					55487-1319	13
25	7.7	22	26	55487-1226		55487-1223	55487-1222	55487-1219	12
23	7.7	20	24					55487-1119	11
21	7.7	18	22	55487-1026	55487-1024	55487-1023	55487-1022	55487-1019	10
19	7.7	16	20	55487-0926		55487-0923	55487-0922	55487-0919	9
17	7.7	14	18	55487-0826		55487-0823	55487-0822	55487-0819	8
15	7.7	12	16					55487-0719	7
13	7.7	10	14					55487-0619	6
11	7.7	8	12	55487-0526		55487-0523	55487-0522	55487-0519	5
9	7.7	6	10					55487-0419	4
7	7.7	4	8					55487-0319	3
5	6	2	6	55487-0226	55487-0224	55487-0223		55487-0219	2
D	C	B	A	COLOR : GREEN 色 : 緑	COLOR : BLUE 色 : 青	COLOR : YELLOW 色 : 黄	COLOR : RED 色 : 赤	COLOR : WHITE 色 : 白	CKT 極数
				TRAY PACKAGE					
				オーダー番号 ORDER NO.					
				CONNECTOR SERIES NO. 55487-****					

SEE SHEET 1
EC NO: J2015-0174
DRWN:YWAKE 2014/08/04
CH'KD:KASAKAWA 2014/08/04
APPR:NUKITA 2014/08/05
DESCRIPTION
REV
D

GENERAL TOLERANCES (UNLESS SPECIFIED)

10 UNDER	±0.2
10 OVER 30 UNDER	±0.25
30 OVER	±0.3
ANGULAR	±3 °

DRAFT WHERE APPLICABLE MUST REMAIN WITHIN DIMENSIONS

DIMENSION STYLE: MM ONLY	SCALE: ---	DESIGN UNITS: METRIC	THIRD ANGLE PROJECTION

DRAWN BY: M.NABEI	DATE: '05/05/20
CHECKED BY: K.TOJO	DATE: '05/05/20
APPROVED BY: N.UKITA	DATE: '05/05/20

TITLE: 2.0 MM W TO B CONN. HEADER ASS'Y (ST.)

molex

MATERIAL NO.: SEE SHEET 1
DOCUMENT NO.: SD-55487-007
SHEET NO.: 2 OF 2

SIZE A3

THIS DRAWING CONTAINS INFORMATION THAT IS PROPRIETARY TO MOLEX INCORPORATED AND SHOULD NOT BE USED WITHOUT WRITTEN PERMISSION