NOTES

1. 材料及び仕上げ(めっき仕様) : TABLE 1 参照
   MATERIAL AND FINISHES : SEE TABLE 1
2. 製品仕様書 : 2059790000-PS 000
   PRODUCT SPECIFICATION:2059790000-PS 000
3. 梱包形態 : SHEET 4 参照
   PACKAGING INFORMATION : SEE SHEET 4
4. 嵌合相手　　: 205979(ISLタイプ),212724(TPAタイプ) シリーズ
   MATES WITH:205979(ISL TYPE),212724(TPA TYPE) SERIES
5. アプリケーション仕様書
   (コネクタ取扱い説明書) : 2059790000-AS 000
   APPLICATION SPECIFICATION
   (CONNECTOR MANUAL):2059790000-AS 000
6. 端子テール部及びネイルの平坦度:0.1 MAX
   TAIL AND NAIL COPLANARITY TO BE 0.1 MAX
7. 偶数極に適用。
   APPLY FOR EVEN CIRCUIT.
8. 端子テール部及びネイルに錫ビスマスめっきを使用している為、
   外観に摺動痕が付く場合があります。
   THE WOUND OF FRICTION MIGHT ADHERE TO
   EXTERNALS BECAUSE THE TIN BISMUTH PLATING IS
   USED FOR THE TAIL AND NAIL.
9. 本製品のプラスチック部に黒点・白点等が確認される場合や
   色合いが異なる場合がありますが、製品性能に影響はありません。
   THERE IS NO INFLUENCE IN THE PRODUCT
   PERFORMANCE THOUGH THE BLACK AND WHITE SPOT ETC.
   MIGHT BE CONFIRMED TO THE PLASTIC PART OF
   THIS PRODUCT AND THE SHADE MIGHT BE DIFFERENT.
10. この製品は205971のGlow Wire適合バージョンです。
    THIS PRODUCT IS A GLOW WIRE COMPLIANT VERSION OF 205971.
11. この製品はポッティング可能製品です。
    THIS PRODUCT ALLOWS TO BE POTTING.

## TABLE 1

| 番号 No. | 部品 PART | 材質 MATERIAL |
|---|---|---|
| ① | ハウジング HOUSING | ポリアミド(PA), UL94V-0, 色 : SEE CHART<br>POLYAMIDE(PA), UL94V-0, COLOR : SEE CHART |
| ② | ターミナル TERMINAL | 黄銅<br>BRASS |
| | | 錫ビスマスめっき : 1.0 micro-meter MIN<br>TIN BISMUTH PLATING(TAIL AREA,CONTACT AREA) |
| | | ニッケルめっき(下地): 1.0 micro-meter MIN<br>NICKEL(UNDER PLATING) |
| ③ | ネイル NAIL | 黄銅<br>BRASS |
| | | 錫めっき　: 1.0 micro-meter MIN<br>MATTE TIN PLATING |
| | | ニッケルめっき(下地): 1.0 micro-meter MIN<br>NICKEL(UNDER PLATING) |

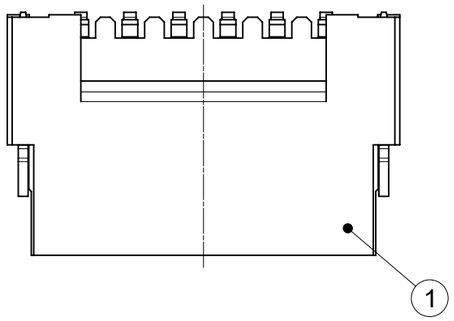


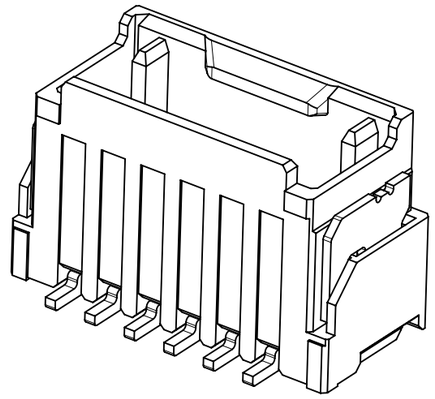

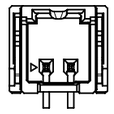

VIEW OF
2-3 CIRCUIT

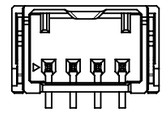

VIEW OF
4-6 CIRCUIT

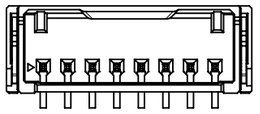

VIEW OF
7-8 CIRCUIT

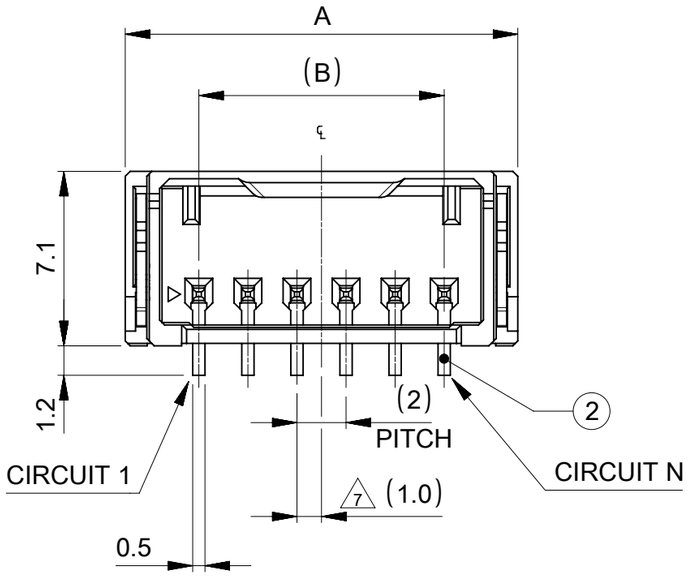


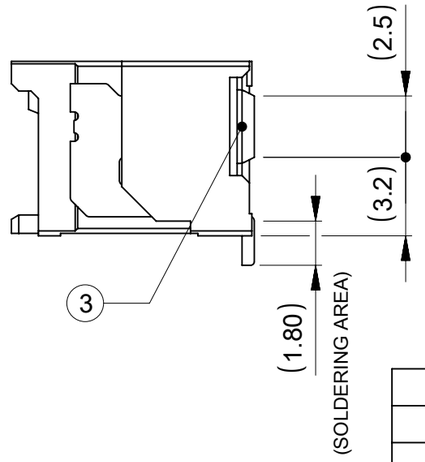


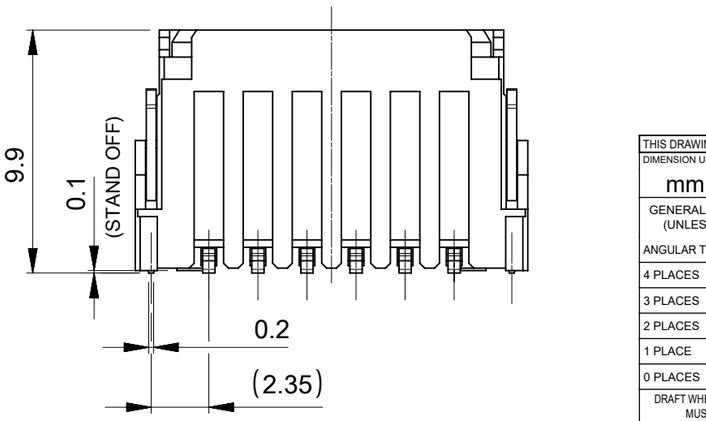


| | | |
|---|---|---|
| 14 | 20 | 8 |
| 12 | 18 | 7 |
| 10 | 16 | 6 |
| 8 | 14 | 5 |
| 6 | 12 | 4 |
| 4 | 10 | 3 |
| 2 | 8 | 2 |
| B | A | 極数 CIRCUIT SIZE |

THIS DRAWING CONTAINS INFORMATION THAT IS PROPRIETARY TO MOLEX ELECTRONIC TECHNOLOGIES, LLC AND SHOULD NOT BE USED WITHOUT WRITTEN PERMISSION

| DIMENSION UNITS | SCALE |
|---|---|
| mm | NTS |

GENERAL TOLERANCES (UNLESS SPECIFIED)

| | | |
|---|---|---|
| ANGULAR TOL | ± | 3.0 ° |
| 4 PLACES | ± | 0.2 |
| 3 PLACES | ± | 0.2 |
| 2 PLACES | ± | 0.2 |
| 1 PLACE | ± | 0.2 |
| 0 PLACES | ± | 0.2 |

DRAFT WHERE APPLICABLE MUST REMAIN WITHIN DIMENSIONS

CURRENT REV DESC: REMOVED OBSOLETED PART NUMBER AS PER PCN#517153

EC NO: 834848

| | | |
|---|---|---|
| DRWN: | PONNAM | 2025/08/29 |
| CHK'D: | GGA | 2025/09/22 |
| APPR: | GGA | 2025/09/22 |

INITIAL REVISION:

| | | |
|---|---|---|
| DRWN: | KYAMADA02 | 2020/12/04 |
| APPR: | SAKIYAMA | 2020/12/15 |

THIRD ANGLE PROJECTION

DRAWING: A3-SIZE

SERIES: 217063

molex

MICRO-ONE 2.0W/B GLOW WIRE TYPE
HEADER ASSEMBLY VERTICAL

PRODUCT CUSTOMER DRAWING

| DOCUMENT NUMBER | DOC TYPE | DOC PART | REVISION |
|---|---|---|---|
| 2170630000-SD | PSD | 000 | C1 |

| MATERIAL NUMBER | CUSTOMER | SHEET NUMBER |
|---|---|---|
| SEE TABLE | GENERAL | 1 OF 5 |

| DOCUMENT STATUS | P1 | RELEASE DATE | 2025/09/22 11:13:46 |
|---|---|---|---|

FORMAT: master-tb-prod-A3
REVISION: J1
DATE: 2021/05/01

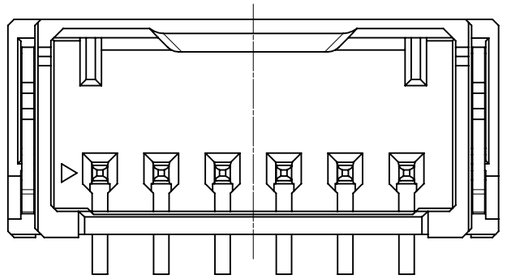

製品レイアウト
PRODUCT LAYOUT

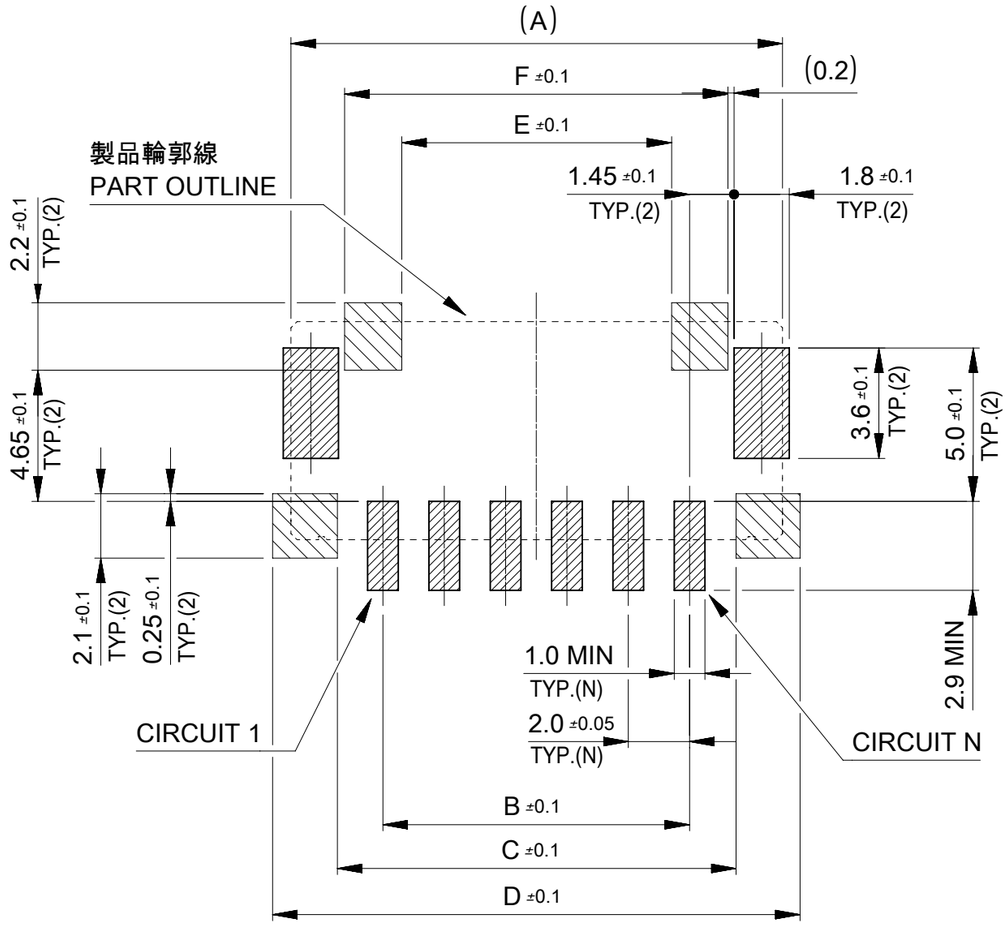


推奨基板レイアウト:実装面側
（参考：基板厚1.6mm, メタルマスク厚0.15mm, マスク開口率100%）
SUGGESTED PCB LAYOUT : COMPONENT SIDE
(REFERENCE: PCB THICKNESS 1.6mm, STENCIL THICKNESS 0.15mm,
APERTURE RATIO 100%)

:パターン禁止エリア
RESTRICTED AREA
NO PCB COMPONENTS ALLOWED

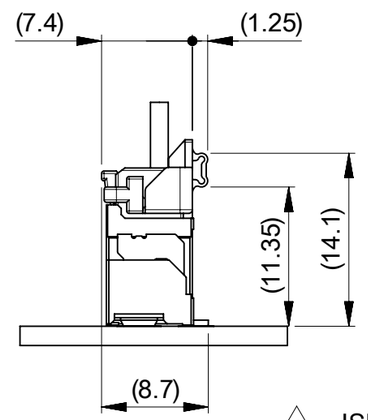


△4 ISLタイプ嵌合図
MATED CONNECTOR OF ISL TYPE

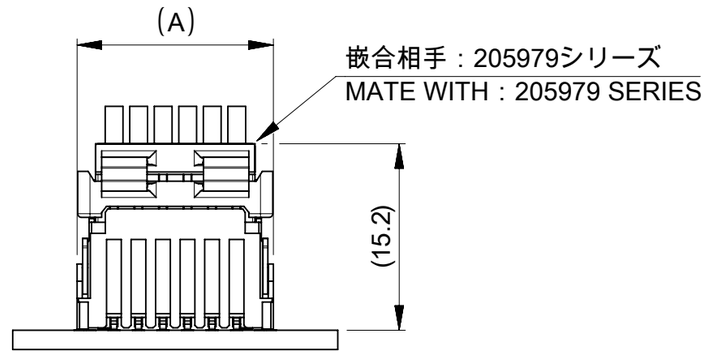


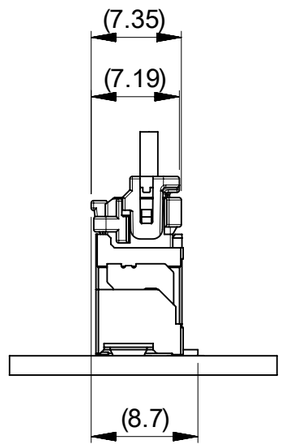


△4 TPAタイプ嵌合図
MATED CONNECTOR OF TPA TYPE

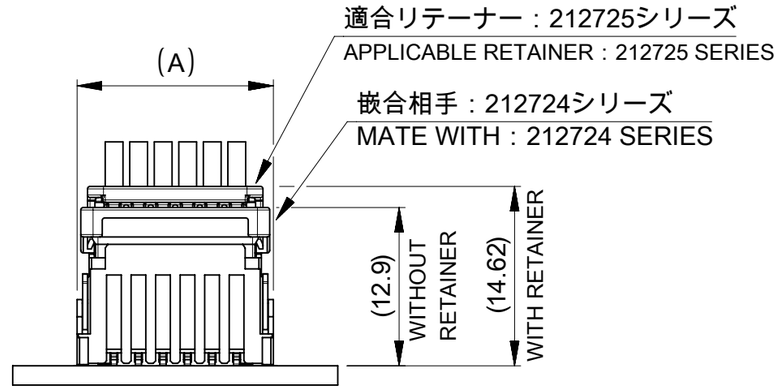


| | | | | |
|---|---|---|---|---|
| 16.5 | 13.6 | 21.2 | 17.0 | 8 |
| 14.5 | 11.6 | 19.2 | 15.0 | 7 |
| 12.5 | 9.6 | 17.2 | 13.0 | 6 |
| 10.5 | 7.6 | 15.2 | 11.0 | 5 |
| 8.5 | 5.6 | 13.2 | 9.0 | 4 |
| 6.5 | 3.6 | 11.2 | 7.0 | 3 |
| 4.5 | 1.6 | 9.2 | 5.0 | 2 |
| F | E | D | C | 極数 CIRCUIT SIZE |

THIS DRAWING CONTAINS INFORMATION THAT IS PROPRIETARY TO MOLEX ELECTRONIC TECHNOLOGIES, LLC AND SHOULD NOT BE USED WITHOUT WRITTEN PERMISSION

| | |
|---|---|
| DIMENSION UNITS | mm |
| SCALE | NTS |
| GENERAL TOLERANCES (UNLESS SPECIFIED) | |
| ANGULAR TOL | ± 3.0 ° |
| 4 PLACES | ± 0.2 |
| 3 PLACES | ± 0.2 |
| 2 PLACES | ± 0.2 |
| 1 PLACE | ± 0.2 |
| 0 PLACES | ± 0.2 |
| DRAFT WHERE APPLICABLE MUST REMAIN WITHIN DIMENSIONS | |

CURRENT REV DESC: REMOVED OBSOLETED PART NUMBER AS PER PCN#517153

EC NO: 834848
DRWN: PONNAM 2025/08/29
CHK'D: GGA 2025/09/22
APPR: GGA 2025/09/22

INITIAL REVISION:
DRWN: KYAMADA02 2020/12/04
APPR: SAKIYAMA 2020/12/15

THIRD ANGLE PROJECTION | DRAWING: A3-SIZE | SERIES: 217063

molex

MICRO-ONE 2.0W/B GLOW WIRE TYPE
HEADER ASSEMBLY VERTICAL

PRODUCT CUSTOMER DRAWING

| DOCUMENT NUMBER | DOC TYPE | DOC PART | REVISION |
|---|---|---|---|
| 2170630000-SD | PSD | 000 | C1 |

| MATERIAL NUMBER | CUSTOMER | SHEET NUMBER |
|---|---|---|
| SEE TABLE | GENERAL | 2 OF 5 |

| DOCUMENT STATUS | P1 | RELEASE DATE | 2025/09/22 11:13:46 |
|---|---|---|---|

FORMAT: master-lb-prod-A3
REVISION: J1
DATE: 2021/05/01

CASE OF WITHOUT COVER TAPE

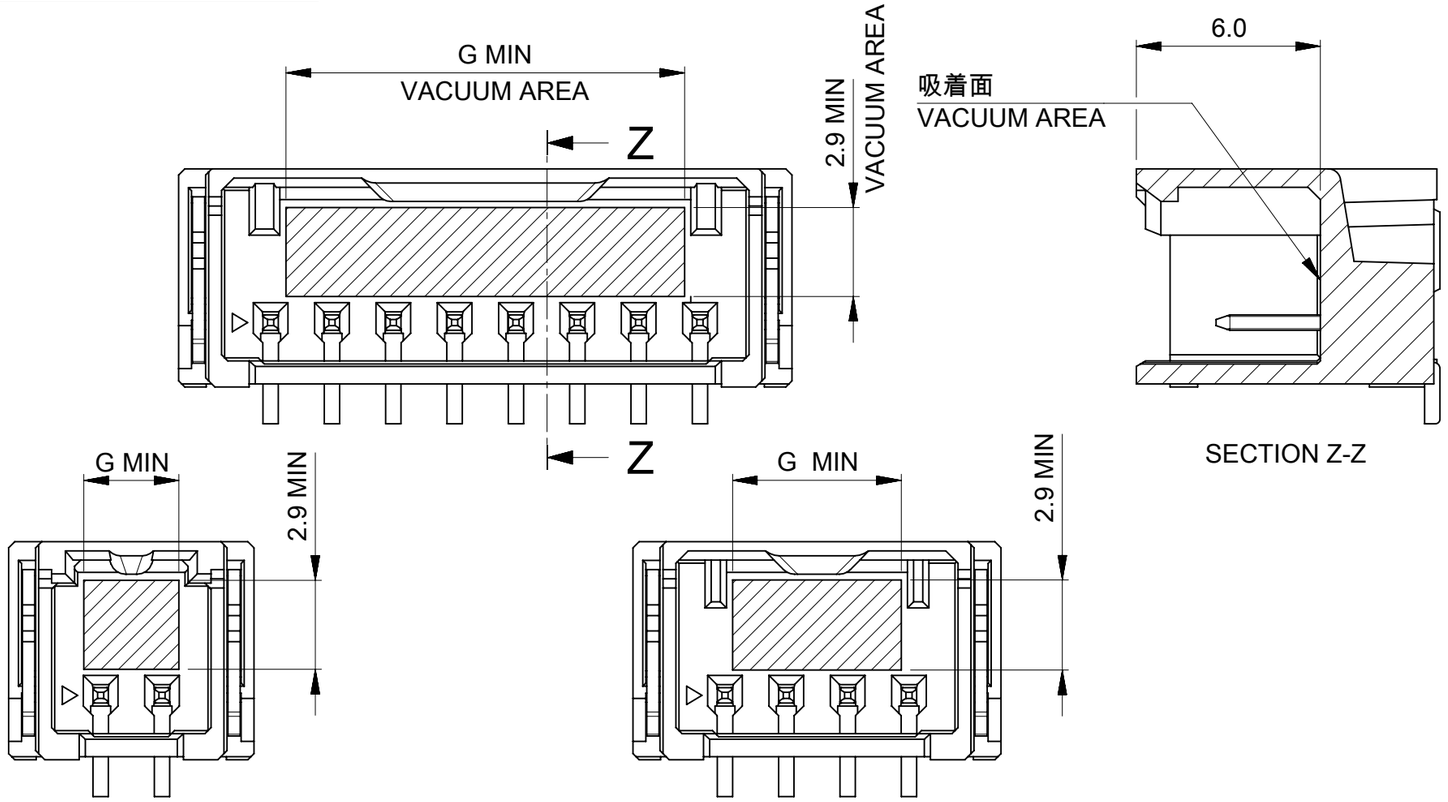


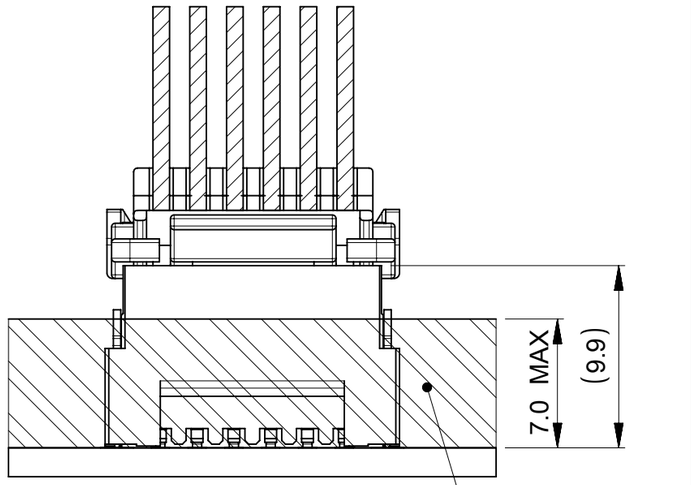


CASE OF WITH COVER TAPE

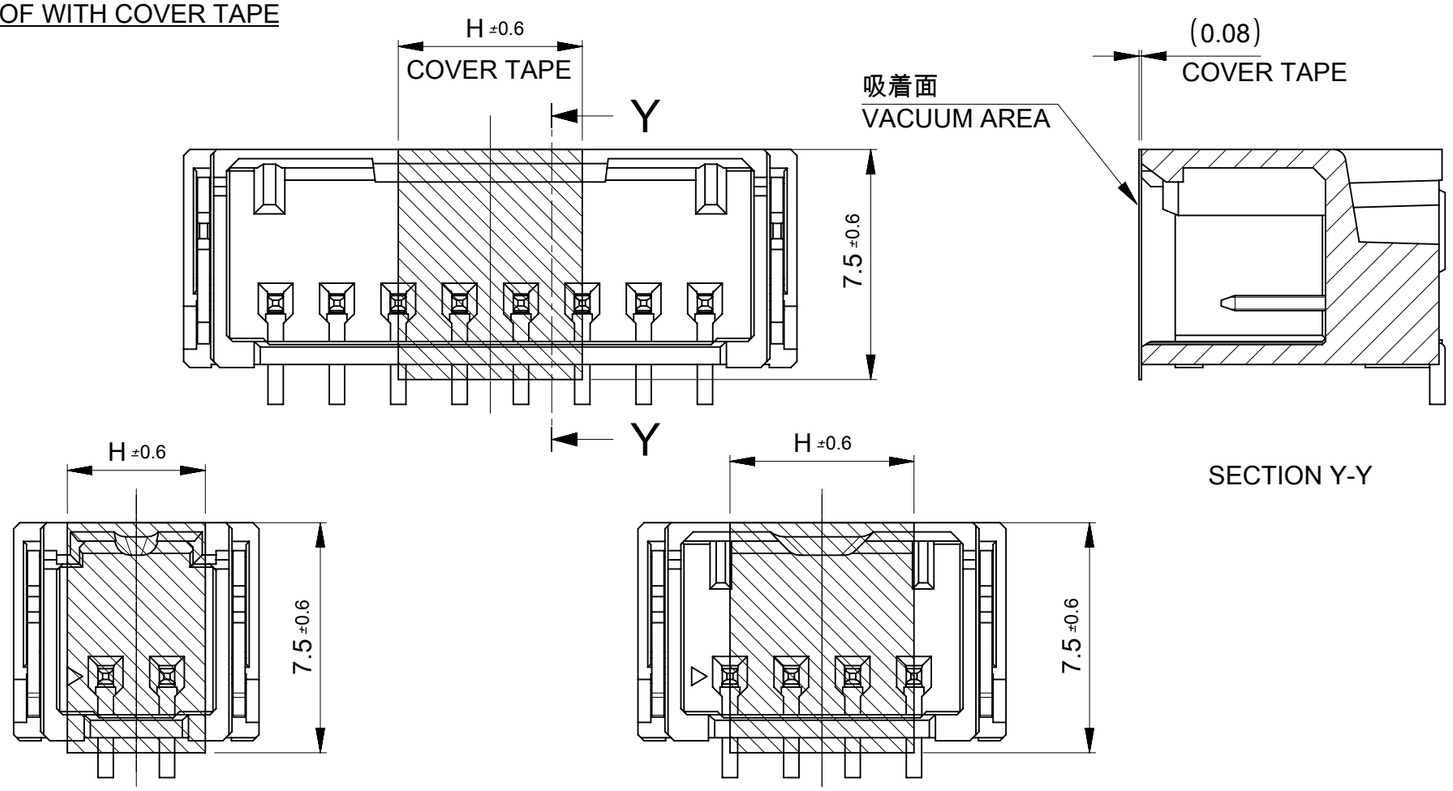


| | | |
|---|---|---|
| 8.0 | 13.0 | 8 |
| | 11.0 | 7 |
| | 9.5 | 6 |
| | 7.5 | 5 |
| 6.0 | 5.5 | 4 |
| | 4.4 | 3 |
| 4.5 | 3.1 | 2 |
| H | G | 極数 CIRCUIT SIZE |

THIS DRAWING CONTAINS INFORMATION THAT IS PROPRIETARY TO MOLEX ELECTRONIC TECHNOLOGIES, LLC AND SHOULD NOT BE USED WITHOUT WRITTEN PERMISSION

| | |
|---|---|
| DIMENSION UNITS | mm |
| SCALE | NTS |
| GENERAL TOLERANCES (UNLESS SPECIFIED) | |
| ANGULAR TOL | ± 3.0 ° |
| 4 PLACES | ± 0.2 |
| 3 PLACES | ± 0.2 |
| 2 PLACES | ± 0.2 |
| 1 PLACE | ± 0.2 |
| 0 PLACES | ± 0.2 |
| DRAFT WHERE APPLICABLE MUST REMAIN WITHIN DIMENSIONS | |

CURRENT REV DESC: REMOVED OBSOLETED PART NUMBER AS PER PCN#517153

EC NO: 834848
DRWN: PONNAM 2025/08/29
CHK'D: GGA 2025/09/22
APPR: GGA 2025/09/22

INITIAL REVISION:
DRWN: KYAMADA02 2020/12/04
APPR: SAKIYAMA 2020/12/15

molex

MICRO-ONE 2.0W/B GLOW WIRE TYPE HEADER ASSEMBLY VERTICAL

PRODUCT CUSTOMER DRAWING

| DOCUMENT NUMBER | DOC TYPE | DOC PART | REVISION |
|---|---|---|---|
| 2170630000-SD | PSD | 000 | C1 |

| THIRD ANGLE PROJECTION | DRAWING | SERIES | MATERIAL NUMBER | CUSTOMER | SHEET NUMBER |
|---|---|---|---|---|---|
| | A3-SIZE | 217063 | SEE TABLE | GENERAL | 3 OF 5 |

| DOCUMENT STATUS | P1 | RELEASE DATE | 2025/09/22 11:13:46 |
|---|---|---|---|

FORMAT: master-tb-prod-A3
REVISION: J1
DATE: 2021/05/01

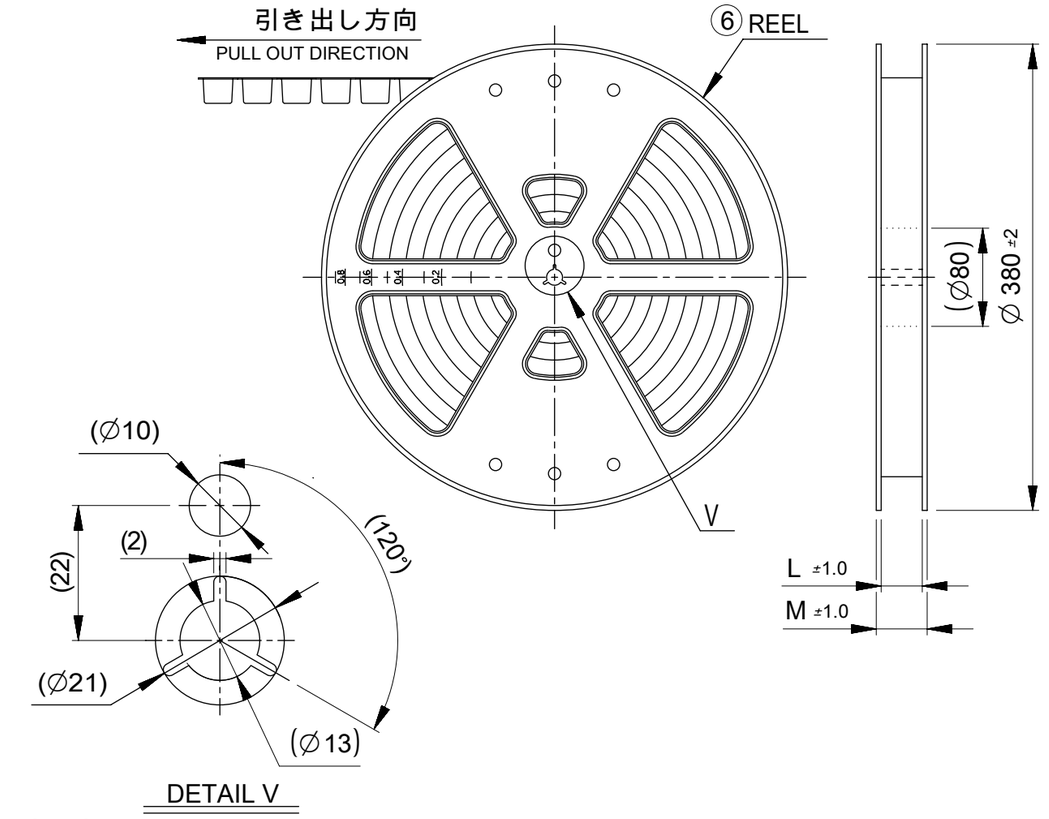


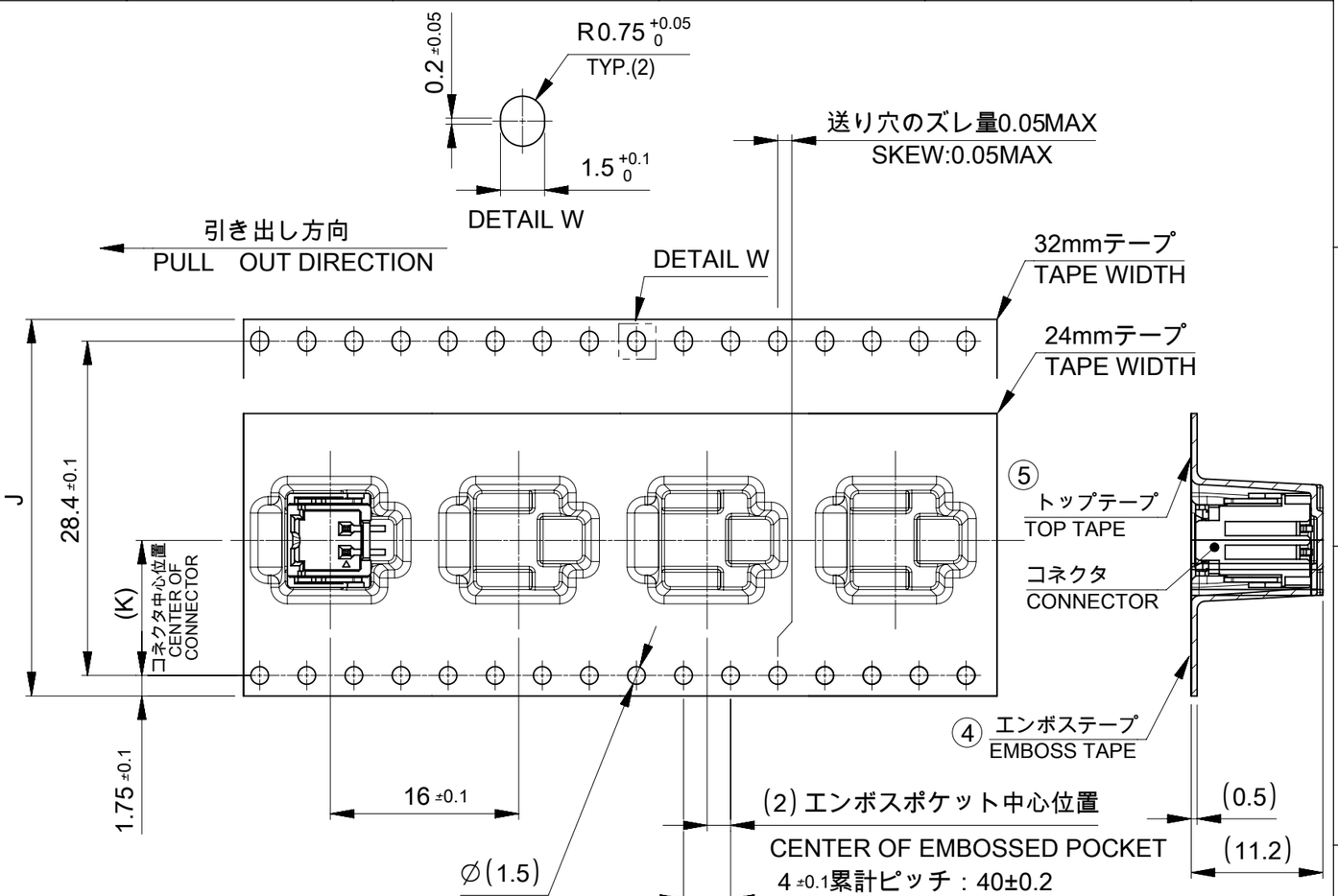


NOTES

12. 梱包数量 :500個/リール
    NUMBER OF CONNECTORS : 500 PIECES/REEL
13. リードテープ長さ
    LEAD TAPE LENGTH

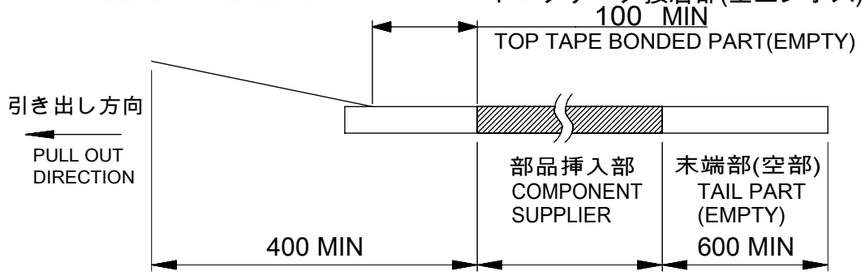


14. トップテープの剥離強度はIEC60286-3に準拠。
    TOP TAPE PEELING FORCE IS DEFINED BY IEC60286-3.
15. 梱包仕様書：2170639200-SPK 200
    PACKAGING SPECIFICATION:2170639200-SPK 200

16 発注番号：SHEET 5 参照
ORDER No.：PLEASE REFER TO SHEET 5 FOR PRODUCT LIST.

217063 0 * * *

極数
CIRCUIT SIZE

4 : カバーテープなし NATURAL(BEIGE)
WITHOUT COVER TAPE NATURAL(BEIGE)

5 : カバーテープなし BLACK
WITHOUT COVER TAPE BLACK

6 : カバーテープあり NATURAL(BEIGE)
WITH COVER TAPE NATURAL(BEIGE)

7 : カバーテープあり BLACK
WITH COVER TAPE BLACK

| 番号 NO. | 部品 PART | 材質 MATERIAL |
|---|---|---|
| ④ | エンボステープ EMBOSS TAPE | ポリスチレン(PS)、その他 POLYSTYRENE(PS), etc |
| ⑤ | トップテープ TOP TAPE | ポリエチレン(PE)、その他 POLYETHYLENE(PE), etc |
| ⑥ | リール REEL | ポリスチレン(PS) <リサイクル材を含む> POLYSTYRENE(PS) <RECYCLE MATERIAL CONTAINED> |

| M | L | K | エンボステープ幅 J WIDTH OF TEPE | 極数 CIRCUIT SIZE |
|---|---|---|---|---|
| 37.5 | 33.5 | 14.2 | 32±0.3 | 8 |
| | | | | 7 |
| | | | | 6 |
| 29.5 | 25.5 | 11.5 | $24^{+0.3}_{-0.1}$ | 5 |
| | | | | 4 |
| | | | | 3 |
| | | | | 2 |

THIS DRAWING CONTAINS INFORMATION THAT IS PROPRIETARY TO MOLEX ELECTRONIC TECHNOLOGIES, LLC AND SHOULD NOT BE USED WITHOUT WRITTEN PERMISSION

DIMENSION UNITS: mm | SCALE: NTS

GENERAL TOLERANCES (UNLESS SPECIFIED)

| | |
|---|---|
| ANGULAR TOL | ± 3.0 ° |
| 4 PLACES | ± 2.0 |
| 3 PLACES | ± 2.0 |
| 2 PLACES | ± 2.0 |
| 1 PLACE | ± 2.0 |
| 0 PLACES | ± 2.0 |

DRAFT WHERE APPLICABLE MUST REMAIN WITHIN DIMENSIONS

CURRENT REV DESC: REMOVED OBSOLETED PART NUMBER AS PER PCN#517153

EC NO: 834848
DRWN: PONNAM 2025/08/29
CHK'D: GGA 2025/09/22
APPR: GGA 2025/09/22

INITIAL REVISION:
DRWN: KYAMADA02 2020/12/04
APPR: SAKIYAMA 2020/12/15

THIRD ANGLE PROJECTION | DRAWING: A3-SIZE | SERIES: 217063

molex

MICRO-ONE 2.0W/B GLOW WIRE TYPE HEADER ASSEMBLY VERTICAL

PRODUCT CUSTOMER DRAWING

| DOCUMENT NUMBER | DOC TYPE | DOC PART | REVISION |
|---|---|---|---|
| 2170630000-SD | PSD | 000 | C1 |

| MATERIAL NUMBER | CUSTOMER | SHEET NUMBER |
|---|---|---|
| SEE TABLE | GENERAL | 4 OF 5 |

| DOCUMENT STATUS | P1 | RELEASE DATE | 2025/09/22 11:13:46 |
|---|---|---|---|

FORMAT: master-tb-prod-A3
REVISION: J1
DATE: 2021/05/01

# △16 製品一覧　PRODUCT LIST

| WITH COVER TAPE | WITHOUT COVER TAPE | |
|---|---|---|
| HOUSING COLOR BLACK | HOUSING COLOR BLACK | |
| 2170630087 | 2170630085 | 8 |
| 0077 | 0075 | 7 |
| 0067 | 0065 | 6 |
| 0057 | 0055 | 5 |
| 0047 | 0045 | 4 |
| 0037 | 0035 | 3 |
| 2170630027 | 2170630025 | 2 |
| 発注番号 ORDER No. | | 極数 CIRCUIT SIZE |
| PACKAGING STYLE : EMBOSSED TAPE AND REEL | | |

THIS DRAWING CONTAINS INFORMATION THAT IS PROPRIETARY TO MOLEX ELECTRONIC TECHNOLOGIES, LLC AND SHOULD NOT BE USED WITHOUT WRITTEN PERMISSION

| DIMENSION UNITS | SCALE |
|---|---|
| mm | NTS |

| GENERAL TOLERANCES (UNLESS SPECIFIED) | |
|---|---|
| ANGULAR TOL | ± 3.0 ° |
| 4 PLACES | ± 0.2 |
| 3 PLACES | ± 0.2 |
| 2 PLACES | ± 0.2 |
| 1 PLACE | ± 0.2 |
| 0 PLACES | ± 0.2 |

DRAFT WHERE APPLICABLE MUST REMAIN WITHIN DIMENSIONS

CURRENT REV DESC: REMOVED OBSOLETED PART NUMBER AS PER PCN#517153

EC NO: 834848
DRWN: PONNAM 2025/08/29
CHK'D: GGA 2025/09/22
APPR: GGA 2025/09/22

INITIAL REVISION:
DRWN: KYAMADA02 2020/12/04
APPR: SAKIYAMA 2020/12/15

molex

MICRO-ONE 2.0W/B GLOW WIRE TYPE HEADER ASSEMBLY VERTICAL

PRODUCT CUSTOMER DRAWING

| DOCUMENT NUMBER | DOC TYPE | DOC PART | REVISION |
|---|---|---|---|
| 2170630000-SD | PSD | 000 | C1 |

| THIRD ANGLE PROJECTION | DRAWING | SERIES | MATERIAL NUMBER | CUSTOMER | SHEET NUMBER |
|---|---|---|---|---|---|
| | A3-SIZE | 217063 | SEE TABLE | GENERAL | 5 OF 5 |

| DOCUMENT STATUS | P1 | RELEASE DATE | 2025/09/22 11:13:46 |
|---|---|---|---|

FORMAT: master-ib-prod-A3
REVISION: J1
DATE: 2021/05/01