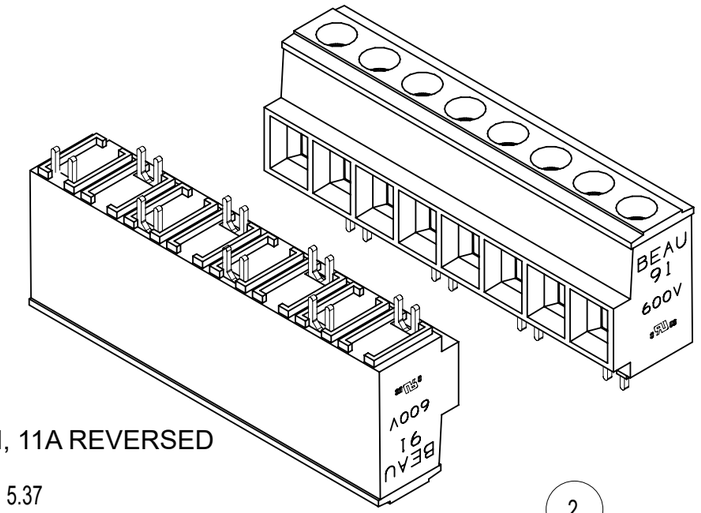

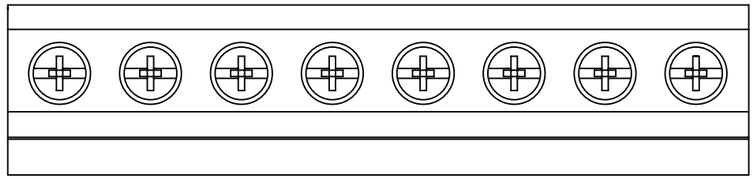

OPTIONAL IMPRINTING, 1/8" 10A SHOWN, 11A REVERSED

RECOMMENDED PTH PATTERN

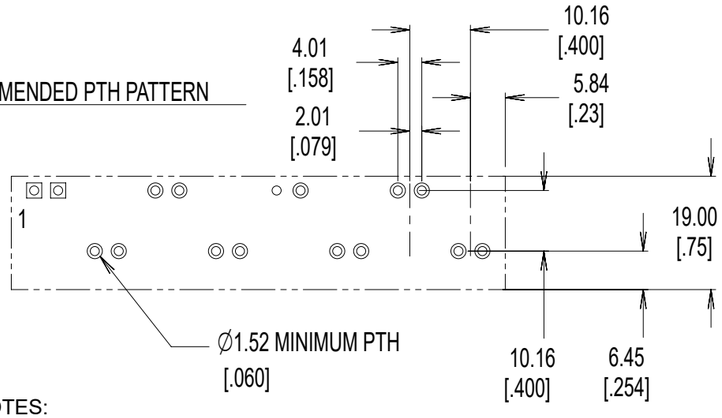

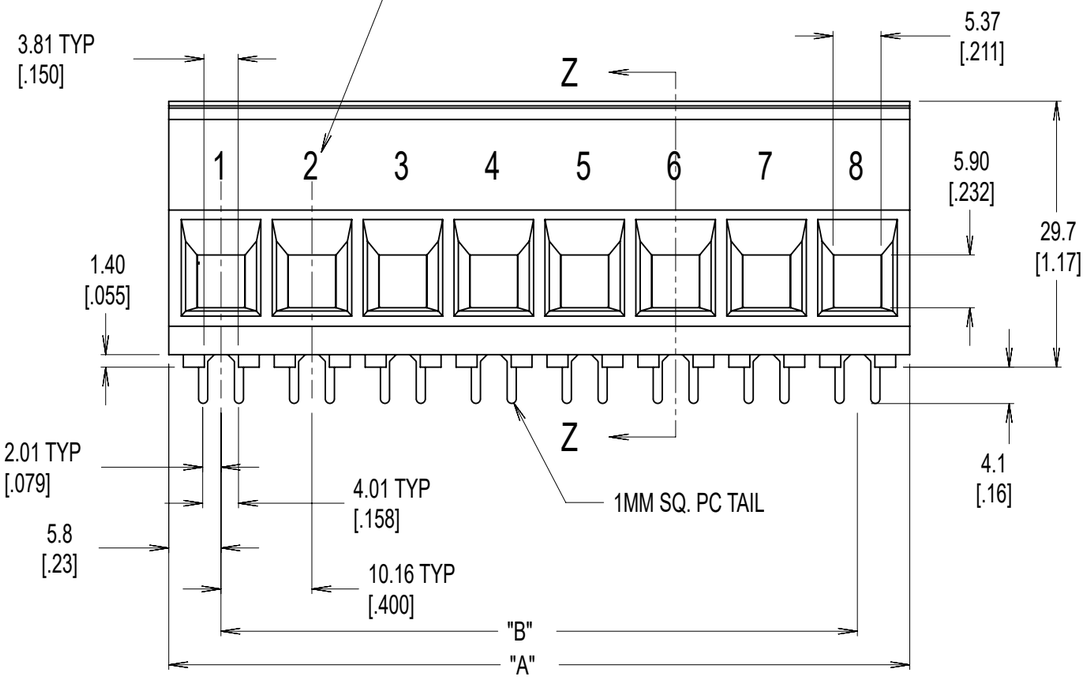

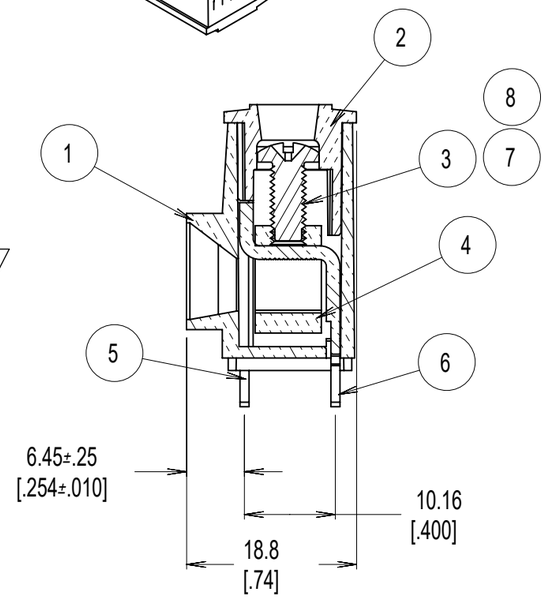

SECTION Z-Z

NOTES:

1. MATERIAL: SEE TABLE
2. FINISHES: SEE TABLE
3. PART IS DESIGNED TO MEET UL 1059 CLASS C 600V, 60A
4. STAGGERED PC TAIL POSITION ON ALTERNATE CIRCUITS
5. "XX" REFERS TO NUMBER OF CIRCUITS
6. FOR OPTIONAL IMPRINTING, REFER TO SD-38120-005.
7. ASSEMBLY IS ROHS COMPLIANT BY EXEMPTION.
   COMPONENTES MARKED WITH AN ASTERISK (*) ARE ROHS
   COMPLIANT BY EXEMPTION, ALL OTHER ARE ROHS COMPLIANT.

ITEM	QTY.	DESCRIPTION	MATERIAL	FINISH
8	XX	SCREW, M4 X 0.7 POZI-SLOT	ST. STEEL	PASSIVATED
7	XX	SCREW, M4 X 0.7 SLOTTED	BRONZE	TIN
6	A/R	REAR TERMINAL	COPPER	TIN
5	A/R	FRONT TERMINAL	COPPER	TIN
4	XX	CAGE (*)	BRASS	NICKEL
3	XX	SCREW, M4 X 0.7 POZI-SLOT	BRONZE	TIN
2	1	COVER	THERMOPLASTIC	BLACK
1	1	BODY	THERMOPLASTIC	BLACK

THIS DRAWING CONTAINS INFORMATION THAT IS PROPRIETARY TO MOLEX ELECTRONIC TECHNOLOGIES, LLC AND SHOULD NOT BE USED WITHOUT WRITTEN PERMISSION

DIMENSION UNITS	MM/INCH
SCALE	3:2
GENERAL TOLERANCES (UNLESS SPECIFIED)	MM / INCH
4 PLACES	± / ±
3 PLACES	± / ± 0.005
2 PLACES	± 0.13 / ± 0.01
1 PLACE	± 0.3 / ±
0 PLACES	± / ±
ANGULAR TOL	± 2.0 °
DRAFT WHERE APPLICABLE MUST REMAIN WITHIN DIMENSIONS	

CURRENT REV DESC: REMOVED OBSOLETED PART NUMBER AS PER PCN#515981

EC NO: 837779
DRWN: PONNAM 2025/10/20
CHK'D: GGA 2025/10/28
APPR: GGA 2025/10/28

INITIAL REVISION:
DRWN: GHR 2000/09/13
APPR: L.ROTHAUS 2002/09/27

THIRD ANGLE PROJECTION | DRAWING: B-SIZE | SERIES: 39910

molex

SR BTS 6 AWG, 600V 60A

PRODUCT CUSTOMER DRAWING

DOCUMENT NUMBER	DOC TYPE	DOC PART	REVISION
SD-39910-001	PSD	001	E4

MATERIAL NUMBER	CUSTOMER	SHEET NUMBER
SEE CHART	GENERAL MARKET	1 OF 2

DOCUMENT STATUS	P1	RELEASE DATE	2025/10/28 11:08:33

FORMAT: Eng-lega-master-tb-prod-B
REVISION: E1
DATE: 2021/05/01

NO. OF CIRCUITS	DIM. "A"		DIM. "B"		MATERIAL NUMBER
	mm	in	mm	in	STANDARD
3	32	1.26	20.32	0.8	399100103
12	123.4	4.86	111.76	4.4	399100112

THIS DRAWING CONTAINS INFORMATION THAT IS PROPRIETARY TO MOLEX ELECTRONIC TECHNOLOGIES, LLC AND SHOULD NOT BE USED WITHOUT WRITTEN PERMISSION

DIMENSION UNITS: MM/INCH
SCALE: 3:2

GENERAL TOLERANCES (UNLESS SPECIFIED)

	MM	INCH
4 PLACES	±	±
3 PLACES	±	± 0.005
2 PLACES	± 0.13	± 0.01
1 PLACE	± 0.3	±
0 PLACES	±	±
ANGULAR TOL	± 2.0 °	

DRAFT WHERE APPLICABLE MUST REMAIN WITHIN DIMENSIONS

CURRENT REV DESC: REMOVED OBSOLETED PART NUMBER AS PER PCN#515981

EC NO: 837779
DRWN: PONNAM 2025/10/20
CHK'D: GGA 2025/10/28
APPR: GGA 2025/10/28

INITIAL REVISION:
DRWN: GHR 2000/09/13
APPR: L.ROTHAUS 2002/09/27

molex

SR BTS 6 AWG, 600V 60A

PRODUCT CUSTOMER DRAWING

DOCUMENT NUMBER	DOC TYPE	DOC PART	REVISION
SD-39910-001	PSD	001	E4

THIRD ANGLE PROJECTION | DRAWING: B-SIZE | SERIES: 39910 | MATERIAL NUMBER: SEE CHART | CUSTOMER: GENERAL MARKET | SHEET NUMBER: 2 OF 2

DOCUMENT STATUS	P1	RELEASE DATE	2025/10/28 11:08:33

FORMAT: Eng-lega-master-tb-prod-B
REVISION: E1
DATE: 2021/05/01