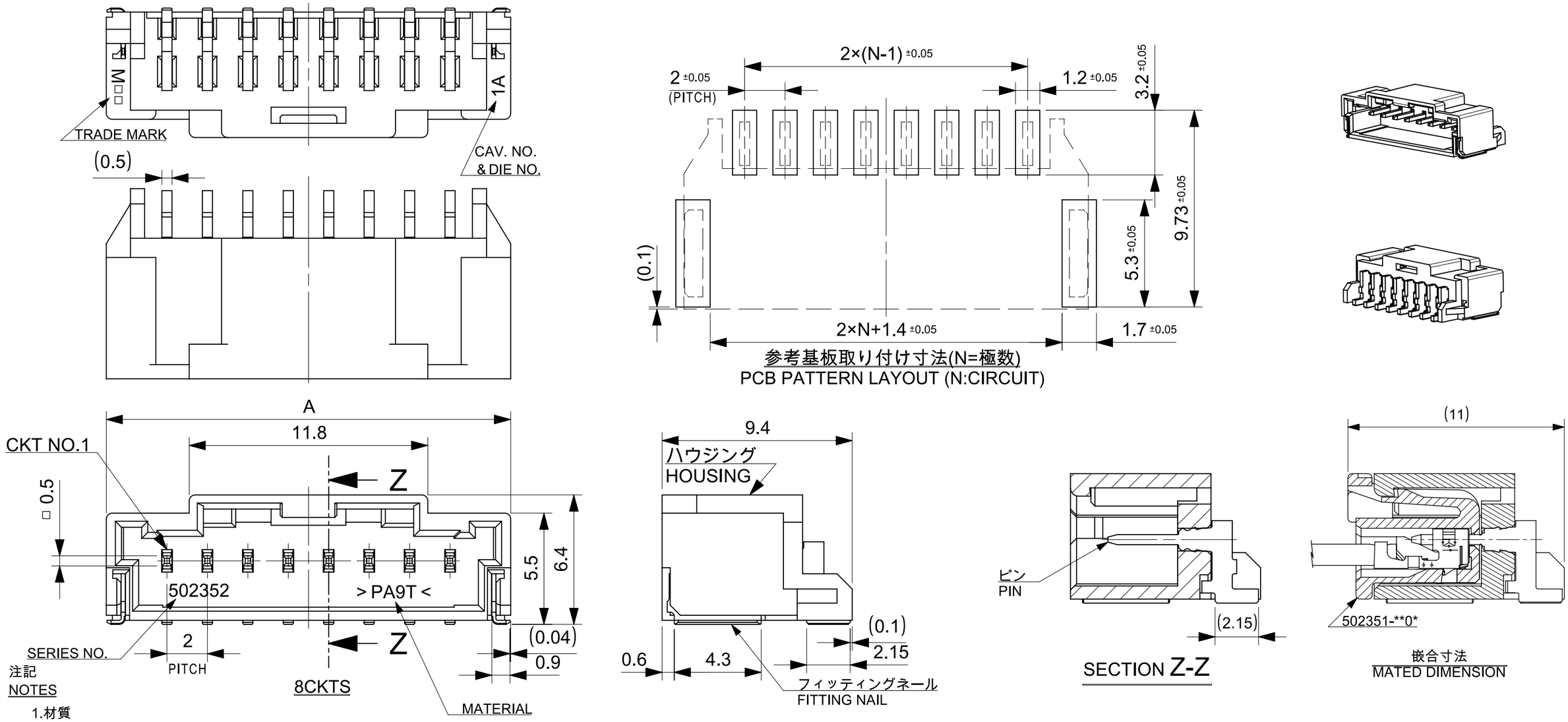

注記
NOTES

1.材質
ハウジング：耐熱性ナイロンUL94V-0
ピン：銅合金、ニッケル下地、錫メッキ、金メッキ
フィッティングネール：銅合金、ニッケル下地、錫メッキ
MATERIAL
HOUSING:POLYAMIDE UL94V-0
PIN: COPPER ALLOY, GOLD OR TIN OVER NICKEL PLATE.
FITTING NAIL: COPPER ALLOY, TIN OVER NICKEL PLATE.

2.色：ナチュラル、黒、赤、青
COLOR:NATURAL, BLACK, RED, BLUE

3.嵌合相手
ハウジング：502351-**0*
錫メッキ端子：50212-8*00,50372-8*00,560085-0101
金メッキ端子：56161-8*81
MATES WITH
HOUSING:502351-**0*
SN PLATING TERMINAL:50212-8*00,50372-8*00,560085-0101
AU PLATING TERMINAL:56161-8*81

4.エンボス梱包品の詳細はSD-502352-002参照
DETAILED TAPING PACKAGE, SEE SD-502352-002.

5.ELV及びRoHS適合
ELV AND RoHS COMPLIANT

6.半田付け面のコプラナリティ：0.1mm MAX.
CO-PLANARITY OF SOLDERING TAILS TO BE 0.1mm MAX.

7.一般公差
GENERAL TOLERANCES
10 UNDER: ±0.2
10 OVER 30 UNDER: ±0.25
30 OVER: ±0.3
ANGULAR: ±3°

INITIAL REVISION:		
DRWN	SHSHIBATA	2007/12/18
CHECK	HKOMATSU	2007/12/18
APPR	AKANESHIGE	2007/12/18

THIS DRAWING CONTAINS INFORMATION THAT IS PROPRIETARY TO MOLEX ELECTRONIC TECHNOLOGIES, LLC AND SHOULD NOT BE USED WITHOUT WRITTEN PERMISSION

FUNCTIONAL SYMBOLS: FA = 0, FC = 0, FP = 0
DIVISIONAL SYMBOLS

DIMENSION UNITS	SCALE
mm	5:1

GENERAL TOLERANCES (UNLESS SPECIFIED)
ANGULAR TOL ± 0.5°
4 PLACES ±
3 PLACES ±
2 PLACES ±
1 PLACE ±
0 PLACES ±
DRAFT WHERE APPLICABLE MUST REMAIN WITHIN DIMENSIONS

CURRENT REV DESC: For fixing wrong view of 6ckt

STATUS: Production
DRWN: Hideo Yoneyama 2024-05-14
CHK'D: Hiromichi Komatsu 2024-05-16
APPR: Takashi Iida 2024-05-16

THIRD ANGLE PROJECTION | DRAWING: A3-SIZE | SERIES: 502352

molex

2.0MM PITCH W/B CONN.
WAFER ASSY R/A SMT

PRODUCT SALES DRAWING

DOCUMENT NUMBER	DOC TYPE	DOC PART	REVISION
SD-502352-001	PSD	001	L4

MATERIAL NUMBER	CUSTOMER	SHEET NUMBER
SEE CHART	GENERAL MARKET	1 OF 4

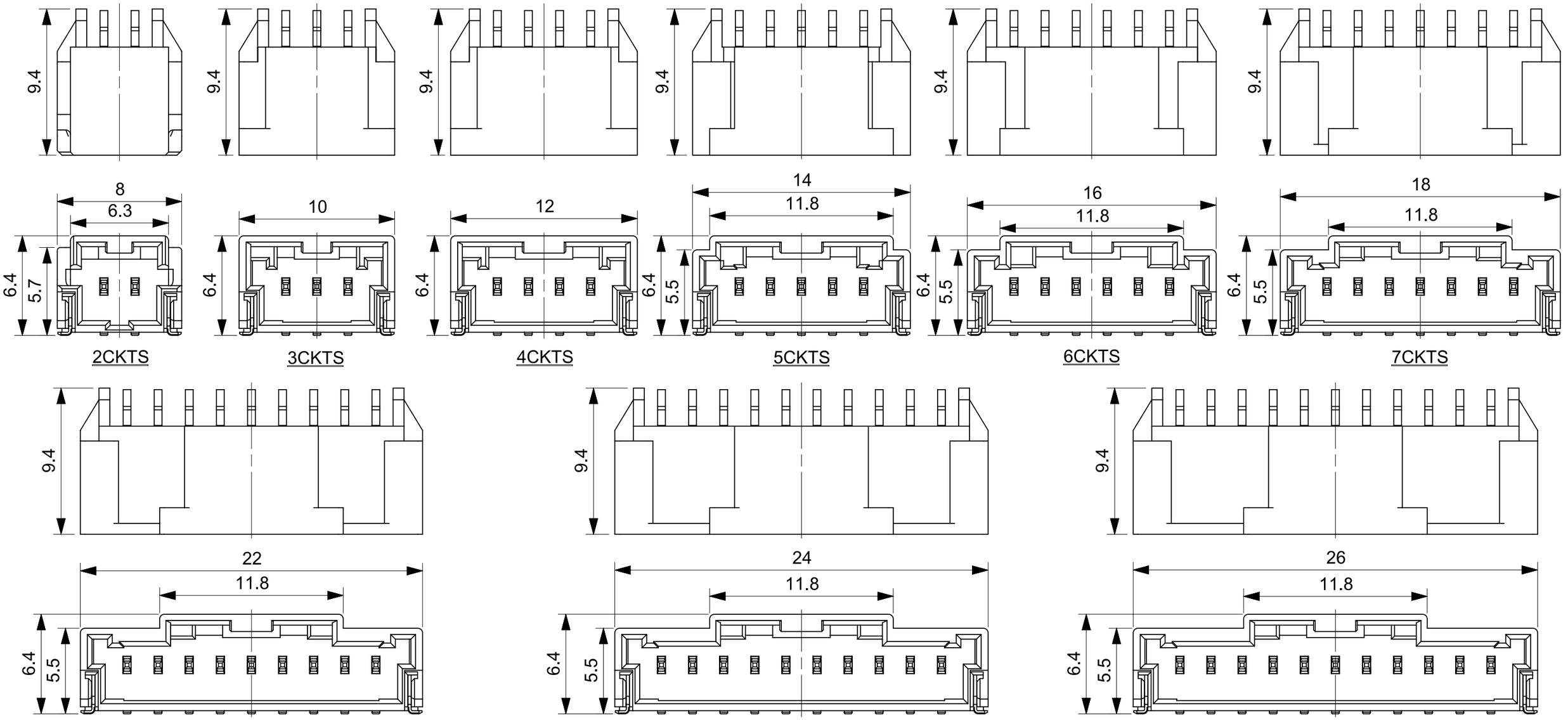

INITIAL REVISION:

DRWN	SHSHIBATA	2007/12/18
CHECK	HKOMATSU	2007/12/18
APPR	AKANESHIGE	2007/12/18

FUNCTIONAL SYMBOLS
FA = 0
FC = 0
FB = 0
DIVISIONAL SYMBOLS

THIS DRAWING CONTAINS INFORMATION THAT IS PROPRIETARY TO MOLEX ELECTRONIC TECHNOLOGIES, LLC AND SHOULD NOT BE USED WITHOUT WRITTEN PERMISSION

DIMENSION UNITS	SCALE
mm	4:1

GENERAL TOLERANCES (UNLESS SPECIFIED)

ANGULAR TOL	± 0.5°
4 PLACES	±
3 PLACES	±
2 PLACES	±
1 PLACE	±
0 PLACES	±

DRAFT WHERE APPLICABLE MUST REMAIN WITHIN DIMENSIONS

CURRENT REV DESC: For fixing wrong view of 6ckt

STATUS: Production
DRWN: Hideo Yoneyama 2024-05-14
CHK'D: Hiromichi Komatsu 2024-05-16
APPR: Takashi Iida 2024-05-16

THIRD ANGLE PROJECTION | DRAWING: A3-SIZE | SERIES: 502352

molex

2.0MM PITCH W/B CONN.
WAFER ASSY R/A SMT

PRODUCT SALES DRAWING

DOCUMENT NUMBER	DOC TYPE	DOC PART	REVISION
SD-502352-001	PSD	001	L4

MATERIAL NUMBER	CUSTOMER	SHEET NUMBER
SEE CHART	GENERAL MARKET	2 OF 4

FORMAT: TC-0010-A3
REVISION: B
DATE: 2022/08/01

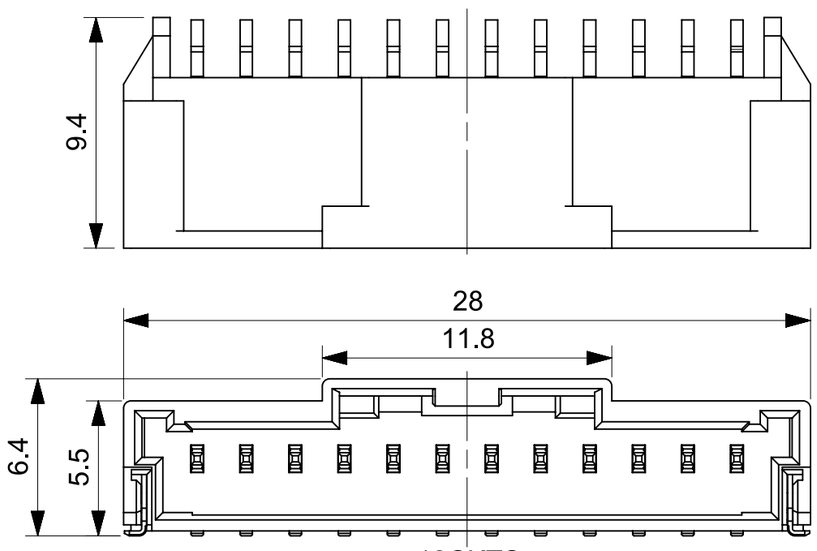

12CKTS

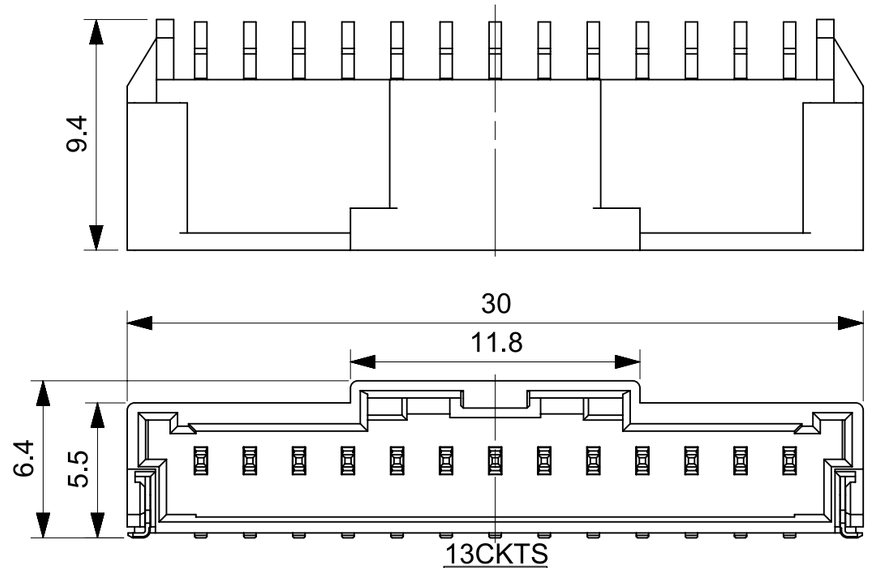

13CKTS

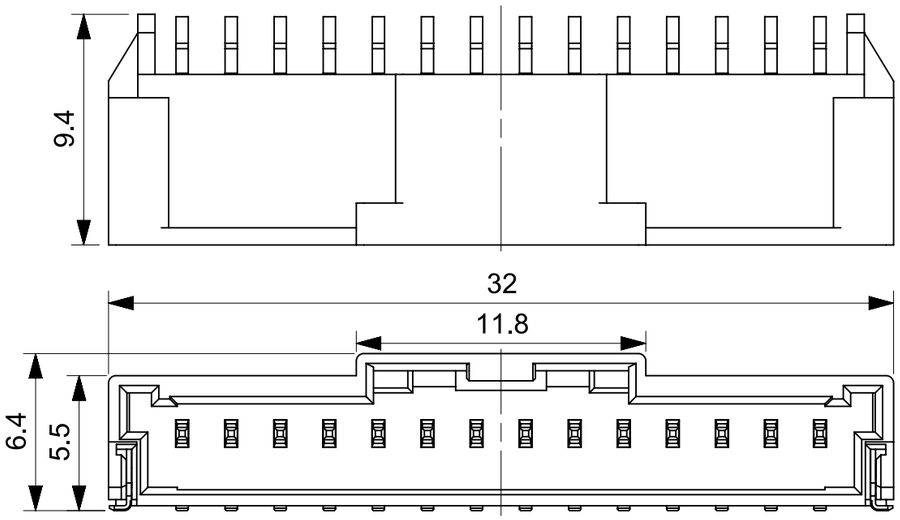

14CKTS

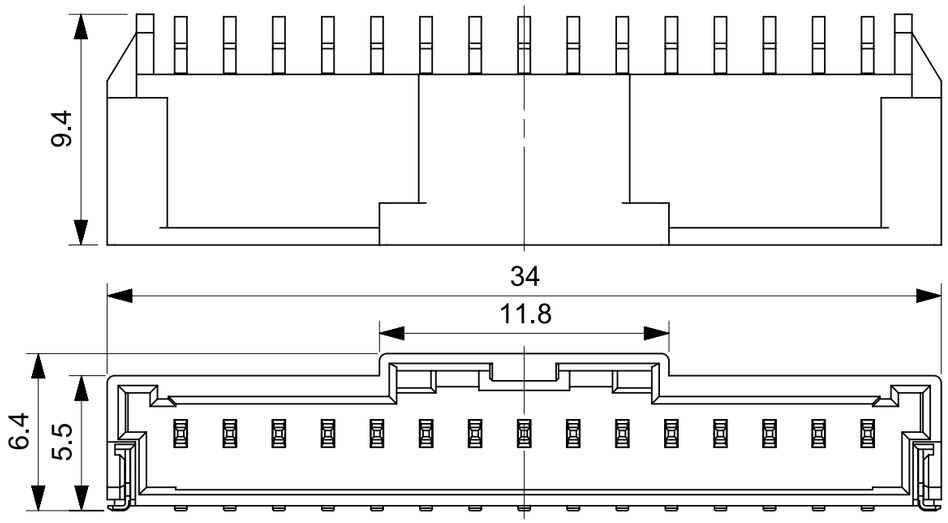

15CKTS

INITIAL REVISION:

DRWN	SHSHIBATA	2007/12/18
CHECK	HKOMATSU	2007/12/18
APPR	AKANESHIGE	2007/12/18

THIS DRAWING CONTAINS INFORMATION THAT IS PROPRIETARY TO MOLEX ELECTRONIC TECHNOLOGIES, LLC AND SHOULD NOT BE USED WITHOUT WRITTEN PERMISSION

FUNCTIONAL SYMBOLS: FA = 0, FC = 0, FP = 0

DIVISIONAL SYMBOLS

DIMENSION UNITS	SCALE
mm	4:1

GENERAL TOLERANCES (UNLESS SPECIFIED)

ANGULAR TOL	±	0.5°
4 PLACES	±	
3 PLACES	±	
2 PLACES	±	
1 PLACE	±	
0 PLACES	±	

DRAFT WHERE APPLICABLE MUST REMAIN WITHIN DIMENSIONS

CURRENT REV DESC: For fixing wrong view of 6ckt

STATUS: Production

DRWN:	Hideo Yoneyama	2024-05-14
CHK'D:	Hiromichi Komatsu	2024-05-16
APPR:	Takashi Iida	2024-05-16

THIRD ANGLE PROJECTION

DRAWING	SERIES
A3-SIZE	502352

molex

2.0MM PITCH W/B CONN.
WAFER ASSY R/A SMT

PRODUCT SALES DRAWING

DOCUMENT NUMBER	DOC TYPE	DOC PART	REVISION
SD-502352-001	PSD	001	L4

MATERIAL NUMBER	CUSTOMER	SHEET NUMBER
SEE CHART	GENERAL MARKET	3 OF 4

FORMAT: TC-A-cm-L-A3
REVISION: B
DATE: 2022/08/01

Sn NATURAL	34.0	502352-1500	15
	32.0	502352-1400	14
	30.0	502352-1300	13
	28.0	502352-1200	12
	26.0	502352-1100	11
	24.0	502352-1000	10
	22.0	502352-0900	9
	20.0	502352-0800	8
	18.0	502352-0700	7
	16.0	502352-0600	6
	14.0	502352-0500	5
	12.0	502352-0400	4
	10.0	502352-0300	3
	8.0	502352-0200	2
PLATING COLOR	A	EMBOSSED PACKAGE ORDER NO.	CKTS
CONNECTOR SERIES NO. 502352-**08			

Au NATURAL	34.0	502352-1510	15
	32.0	502352-1410	14
	30.0	502352-1310	13
	28.0	502352-1210	12
	26.0	502352-1110	11
	24.0	502352-1010	10
	22.0	502352-0910	9
	20.0	502352-0810	8
	18.0	502352-0710	7
	16.0	502352-0610	6
	14.0	502352-0510	5
	12.0	502352-0410	4
	10.0	502352-0310	3
	8.0	502352-0210	2
PLATING COLOR	A	EMBOSSED PACKAGE ORDER NO.	CKTS
CONNECTOR SERIES NO. 502352-**18			

Sn BLACK	34.0	502352-1501	15
	32.0	502352-1401	14
	30.0	502352-1301	13
	28.0	502352-1201	12
	26.0	502352-1101	11
	24.0	502352-1001	10
	22.0	502352-0901	9
	20.0	502352-0801	8
	18.0	502352-0701	7
	16.0	502352-0601	6
	14.0	502352-0501	5
	12.0	502352-0401	4
	10.0	502352-0301	3
	8.0	502352-0201	2
PLATING COLOR	A	EMBOSSED PACKAGE ORDER NO.	CKTS
CONNECTOR SERIES NO. 502352-**28			

Sn RED	-	-	15
	-	-	14
	-	-	13
	-	-	12
	-	-	11
	-	-	10
	-	-	9
	20.0	502352-0802	8
	-	-	7
	16.0	502352-0602	6
	-	-	5
	12.0	502352-0402	4
	10.0	502352-0302	3
	8.0	502352-0202	2
PLATING COLOR	A	EMBOSSED PACKAGE ORDER NO.	CKTS
CONNECTOR SERIES NO. 502352-**48			

Sn BLUE	-	-	15
	-	-	14
	-	-	13
	-	-	12
	-	-	11
	-	-	10
	-	-	9
	20.0	502352-0803	8
	-	-	7
	16.0	502352-0603	6
	-	-	5
	12.0	502352-0403	4
	10.0	502352-0303	3
	8.0	502352-0203	2
PLATING COLOR	A	EMBOSSED PACKAGE ORDER NO.	CKTS
CONNECTOR SERIES NO. 502352-**68			

INITIAL REVISION:		
DRWN	SHSHIBATA	2007/12/18
CHECK	HKOMATSU	2007/12/18
APPR	AKANESHIGE	2007/12/18

THIS DRAWING CONTAINS INFORMATION THAT IS PROPRIETARY TO MOLEX ELECTRONIC TECHNOLOGIES, LLC AND SHOULD NOT BE USED WITHOUT WRITTEN PERMISSION

FUNCTIONAL SYMBOLS: FA = 0, FC = 0, FP = 0

DIVISIONAL SYMBOLS

DIMENSION UNITS: mm | SCALE: 1:1

GENERAL TOLERANCES (UNLESS SPECIFIED)

ANGULAR TOL	± 0,5'
4 PLACES	±
3 PLACES	±
2 PLACES	±
1 PLACE	±
0 PLACES	±

DRAFT WHERE APPLICABLE MUST REMAIN WITHIN DIMENSIONS

CURRENT REV DESC: For fixing wrong view of 6ckt

STATUS: Production

DRWN:	Hideo Yoneyama	2024-05-14
CHK'D:	Hiromichi Komatsu	2024-05-16
APPR:	Takashi Iida	2024-05-16

THIRD ANGLE PROJECTION | DRAWING: A3-SIZE | SERIES: 502352

molex

2.0MM PITCH W/B CONN.
WAFER ASSY R/A SMT

PRODUCT SALES DRAWING

DOCUMENT NUMBER	DOC TYPE	DOC PART	REVISION
SD-502352-001	PSD	001	L4

MATERIAL NUMBER	CUSTOMER	SHEET NUMBER
SEE CHART	GENERAL MARKET	4 OF 4

FORMAT: TC-0101-LA3
REVISION: B
DATE: 2022/08/01

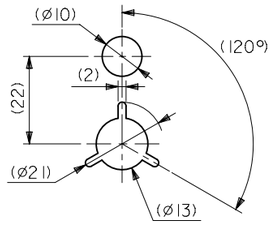

DETAIL Y

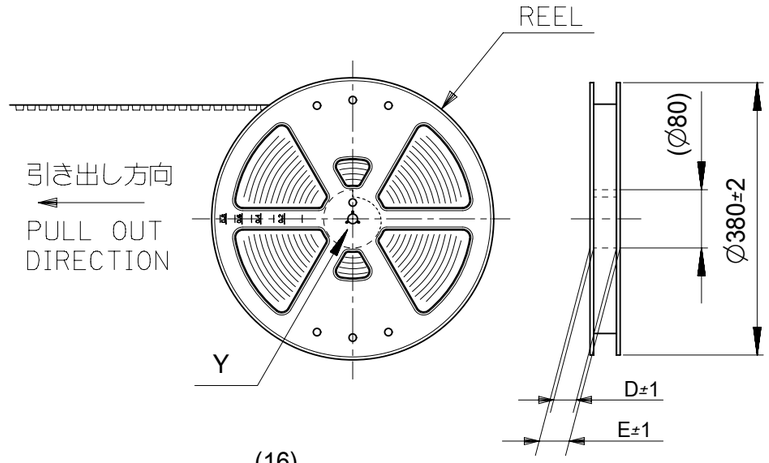

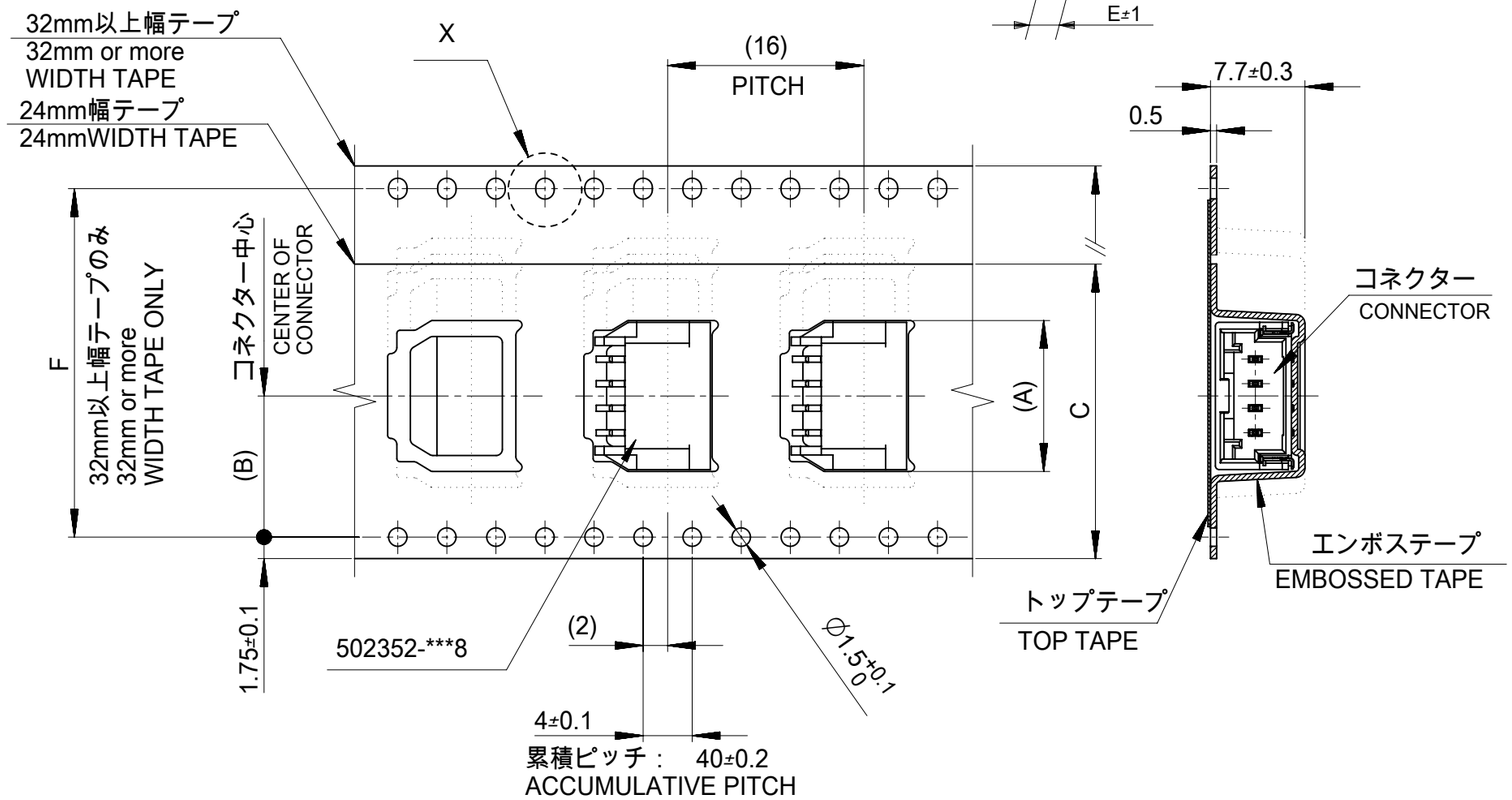

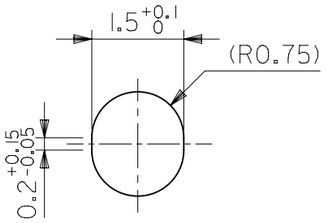

DETAIL X
(SCALE 10:1)

引き出し方向
PULL OUT DIRECTION

エンボステープ内の製品の向き
DIRECTION OF CONNECTOR IN EMBOSSED TAPE

注記
NOTES

1. 製品番号
   ナチュラル・ 錫めっき: 502352-**00
   ナチュラル・ 金めっき: 502352-**10
   黒・ 錫めっき: 502352-**01
   赤・ 錫めっき: 502352-**02
   青・ 錫めっき: 502352-**03
   詳細寸法については、製品単体図面を参照下さい。
   PART NO.
   NATURAL Sn Plating: 502352-**00
   NATURAL Au Plating: 502352-**10
   BLACK Sn Plating: 502352-**01
   RED Sn Plating: 502352-**02
   BLUE Sn Plating: 502352-**03
   SEE SALES DRAWING FOR CONNECTOR
2. 梱包数量： 700個/リール
   NUMBER OF CONNECTORS 700PCS/REEL
3. リードテープ長さ
   LEAD TAPE LENGHT

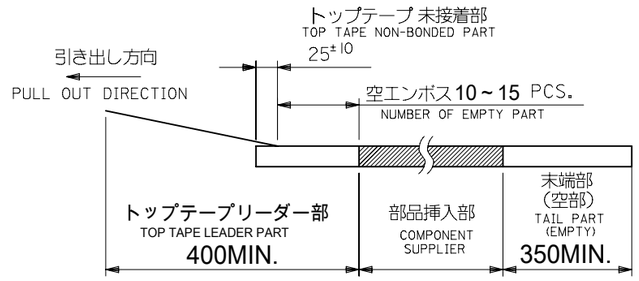

4. 材料
   MATERIAL
   キャリアテープ： ポリスチレン
   CARRIER TAPE: POLYSTYRENE
   トップテープ： PET, PE, PEF
   TOP TAPE: PET, PE, PEF
   リール： ポリスチレン
   REEL: POLYSTYRENE
5. 一般公差
   GENERAL TOLERANCES
   10 UNDER: ±0.2
   10 OVER 30 UNDER: ±0.25
   30 OVER: ±0.3
   ANGULAR: ±1°

INITIAL REVISION:		
DRWN	SHSHIBATA	2007/06/06
CHECK	TAITO	2007/06/06
APPR	MAYAMAMOTO	2012/03/14

THIS DRAWING CONTAINS INFORMATION THAT IS PROPRIETARY TO MOLEX ELECTRONIC TECHNOLOGIES, LLC AND SHOULD NOT BE USED WITHOUT WRITTEN PERMISSION

DIMENSION UNITS	SCALE
mm	NTS

GENERAL TOLERANCES (UNLESS SPECIFIED)

ANGULAR TOL	± °
4 PLACES	±
3 PLACES	±
2 PLACES	±
1 PLACE	±
0 PLACES	±

DRAFT WHERE APPLICABLE MUST REMAIN WITHIN DIMENSIONS

CURRENT REV DESC:

EC NO: 629663
DRWN: MSATO08 2019/12/26
CHK'D: HIIJIMA 2019/12/27
APPR: TOSADA 2019/12/27

INITIAL REVISION:
DRWN: SHSHIBATA 2007/06/19
APPR: AKANESHIGE 2007/06/19

THIRD ANGLE PROJECTION | DRAWING: A3-SIZE | SERIES: 502352

molex

2.0MM PITCH W/B CONN.
WAFER ASSY EMBOSSED TAPE PACKAGE

PRODUCT CUSTOMER DRAWING

DOCUMENT NUMBER	DOC TYPE	DOC PART	REVISION
SD-502352-002	PSD	001	K2

MATERIAL NUMBER	CUSTOMER	SHEET NUMBER
SEE CHART	GENERAL MARKET	1 OF 2

DOCUMENT STATUS	P1	RELEASE DATE	2019/12/27 08:05:27

FORMAT: master-lb-prod-A3
REVISION: H
DATE: 2018/01/18

Sn NATURAL	52.4	61.4	57.4	56	26.2	34.3	502352-1500	15
						32.3	502352-1400	14
	40.4	49.4	45.4	44	20.2	30.3	502352-1300	13
						28.3	502352-1200	12
						26.3	502352-1100	11
						24.3	502352-1000	10
						22.3	502352-0900	9
	28.4	37.4	33.4	32	14.2	20.3	502352-0800	8
						18.3	502352-0700	7
						16.3	502352-0600	6
		29.4	25.4	24	11.5	14.3	502352-0500	5
						12.3	502352-0400	4
						10.3	502352-0300	3
						8.3	502352-0200	2
PLATING COLOR	F	E	D	C	(B)	(A)	エンボス梱包品 製品番号 EMBOSSED PACKAGE MATERIAL NO.	極数 CKT.

Au NATURAL	52.4	61.4	57.4	56	26.2	34.3	502352-1510	15
						32.3	502352-1410	14
	40.4	49.4	45.4	44	20.2	30.3	502352-1310	13
						28.3	502352-1210	12
						26.3	502352-1110	11
						24.3	502352-1010	10
						22.3	502352-0910	9
	28.4	37.4	33.4	32	14.2	20.3	502352-0810	8
						18.3	502352-0710	7
						16.3	502352-0610	6
		29.4	25.4	24	11.5	14.3	502352-0510	5
						12.3	502352-0410	4
						10.3	502352-0310	3
						8.3	502352-0210	2
PLATING COLOR	F	E	D	C	(B)	(A)	エンボス梱包品 製品番号 EMBOSSED PACKAGE MATERIAL NO.	極数 CKT.

Sn BLACK	52.4	61.4	57.4	56	26.2	34.3	502352-1501	15
						32.3	502352-1401	14
	40.4	49.4	45.4	44	20.2	30.3	502352-1301	13
						28.3	502352-1201	12
						26.3	502352-1101	11
						24.3	502352-1001	10
						22.3	502352-0901	9
	28.4	37.4	33.4	32	14.2	20.3	502352-0801	8
						18.3	502352-0701	7
						16.3	502352-0601	6
		29.4	25.4	24	11.5	14.3	502352-0501	5
						12.3	502352-0401	4
						10.3	502352-0301	3
						8.3	502352-0201	2
PLATING COLOR	F	E	D	C	(B)	(A)	エンボス梱包品 製品番号 EMBOSSED PACKAGE MATERIAL NO.	極数 CKT.

Sn RED								15
								14
								13
								12
								11
								10
								9
	28.4	37.4	33.4	32	14.2	20.3	502352-0802	8
								7
						16.3	502352-0602	6
		29.4	25.4	24	11.5			5
						12.3	502352-0402	4
						10.3	502352-0302	3
						8.3	502352-0202	2
PLATING COLOR	F	E	D	C	(B)	(A)	エンボス梱包品 製品番号 EMBOSSED PACKAGE MATERIAL NO.	極数 CKT.

Sn BLUE								15
								14
								13
								12
								11
								10
								9
	28.4	37.4	33.4	32	14.2	20.3	502352-0803	8
								7
						16.3	502352-0603	6
		29.4	25.4	24	11.5			5
						12.3	502352-0403	4
						10.3	502352-0303	3
						8.3	502352-0203	2
PLATING COLOR	F	E	D	C	(B)	(A)	エンボス梱包品 製品番号 EMBOSSED PACKAGE MATERIAL NO.	極数 CKT.

INITIAL REVISION:
DRWN SHSHIBATA 2007/06/06
CHECK TAITO 2007/06/06
APPR MAYAMAMOTO 2012/03/14

THIS DRAWING CONTAINS INFORMATION THAT IS PROPRIETARY TO MOLEX ELECTRONIC TECHNOLOGIES, LLC AND SHOULD NOT BE USED WITHOUT WRITTEN PERMISSION

DIMENSION UNITS: mm
SCALE: NTS
GENERAL TOLERANCES (UNLESS SPECIFIED)
ANGULAR TOL ± °
4 PLACES ±
3 PLACES ±
2 PLACES ±
1 PLACE ±
0 PLACES ±
DRAFT WHERE APPLICABLE MUST REMAIN WITHIN DIMENSIONS

CURRENT REV DESC:

EC NO: 629663
DRWN: MSATO08 2019/12/26
CHK'D: HIIJIMA 2019/12/27
APPR: TOSADA 2019/12/27

INITIAL REVISION:
DRWN: SHSHIBATA 2007/06/19
APPR: AKANESHIGE 2007/06/19

THIRD ANGLE PROJECTION
DRAWING: A3-SIZE
SERIES: 502352

molex

2.0MM PITCH W/B CONN.
WAFER ASSY EMBOSSED TAPE PACKAGE

PRODUCT CUSTOMER DRAWING

DOCUMENT NUMBER	DOC TYPE	DOC PART	REVISION
SD-502352-002	PSD	001	K2

MATERIAL NUMBER	CUSTOMER	SHEET NUMBER
SEE CHART	GENERAL MARKET	2 OF 2

DOCUMENT STATUS	P1	RELEASE DATE	2019/12/27 08:05:27

FORMAT: master-tb-prod-A3
REVISION: H
DATE: 2018/01/18