POZI SLOT SHOWN
SLOTTED SCREW OPTIONAL

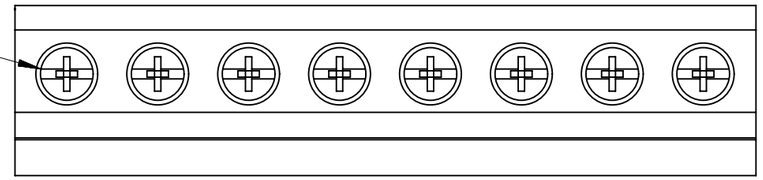

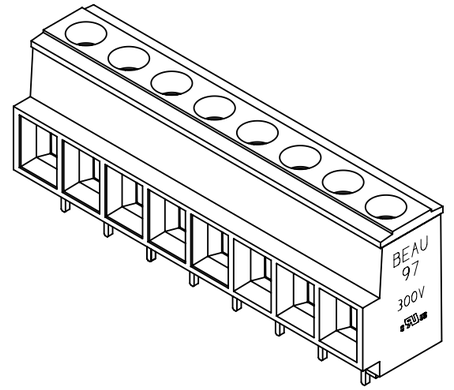

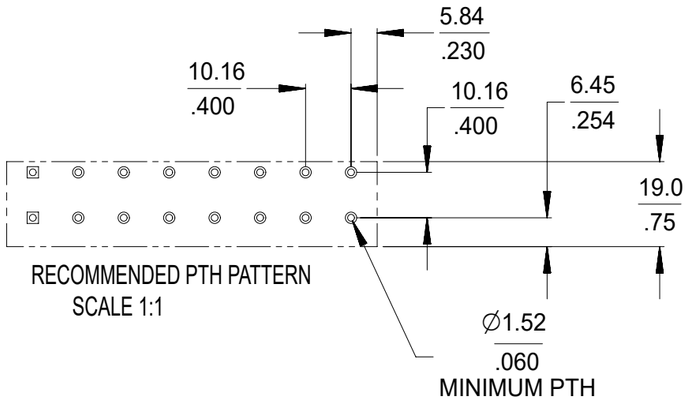

RECOMMENDED PTH PATTERN
SCALE 1:1

OPTIONAL IMPRINTING, 3.2 (1/8),
10A SHOWN, 11A REVERSED

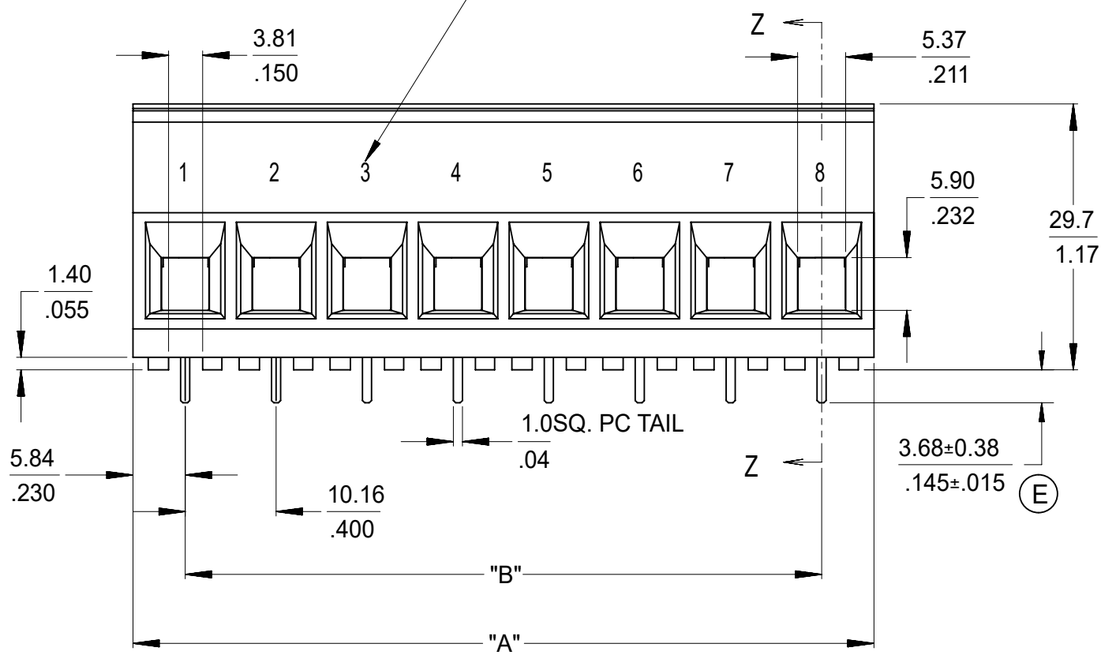

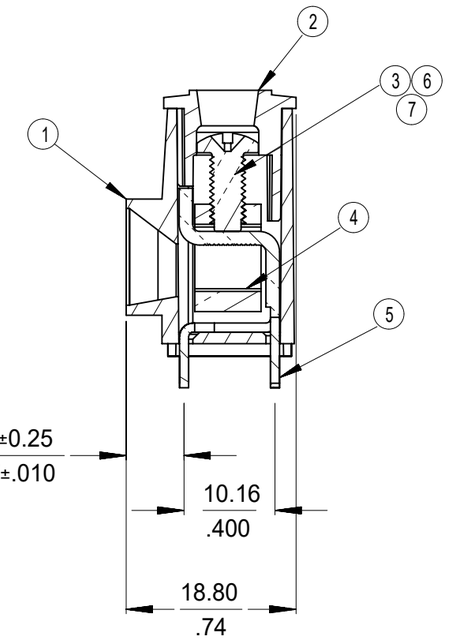

SECTION Z-Z

NOTES:

1. MATERIAL: SEE TABLE.
2. FINISHES: SEE TABLE.
3. PRODUCT SPECIFICATION: NOT REQUIRED.
4. PACKAGING: NOT REQUIRED.
5. MATES WITH: NONE.
6. ALL FEATURES ARE TYPICAL UNLESS OTHERWISE NOTED.
7. PART IS DESIGNED TO MEET UL 1059 CLASS C 300V, 60A.
8. "XX" REFERS TO NUMBER OF CIRCUITS.
9. FOR OPTIONAL IMPRINTING REFER TO SD-38120-005
10. ASSEMBLY IS ROHS COMPLIANT.

ITEM	QTY.	DESCRIPTION	MATERIAL	FINISH
7	XX	SCREW, M4 X .07 POZI-SLOT (-56 OPT)	ST. STEEL	TIN PLATE
6	XX	SCREW, M4 X 0.7 SLOTTED	BRONZE	TIN PLATE
5	XX	TERMINAL	COPPER	TIN PLATE
4	XX	CAGE	BRASS	NICKEL PLATE
3	XX	SCREW, M4 X .07 POZI-SLOT	BRONZE	TIN PLATE
2	1	COVER	POLYESTER (PBT)	BLACK
1	1	BODY	POLYESTER (PBT)	BLACK

DOCUMENT STATUS	P1	RELEASE DATE	2024/01/29 05:14:18

THIS DRAWING CONTAINS INFORMATION THAT IS PROPRIETARY TO MOLEX ELECTRONIC TECHNOLOGIES, LLC AND SHOULD NOT BE USED WITHOUT WRITTEN PERMISSION

DIMENSION UNITS	SCALE
mm/IN	3:2

GENERAL TOLERANCES (UNLESS SPECIFIED)

	MM	INCH
4 PLACES	±	±
3 PLACES	±	± 0.005
2 PLACES	± 0.13	± 0.01
1 PLACE	± 0.3	±
0 PLACES	±	±
ANGULAR TOL	± 2.0 °	

DRAFT WHERE APPLICABLE MUST REMAIN WITHIN DIMENSIONS

CURRENT REV DESC: REMOVED OBSOLETED PART NUMBERS AS PER PCN#514486.

EC NO: 774109
DRWN: RAVINR1 2023/12/27
CHK'D: GGA 2024/01/29
APPR: GGA 2024/01/29

INITIAL REVISION:
DRWN: R.STONE 2002/09/13
APPR: L.ROTHAUS 2002/09/27

THIRD ANGLE PROJECTION | DRAWING: B-SIZE | SERIES: 39970

molex

10.16MM/.400 SINGLE ROW
BTS ASSY, 6 AWG, 300V 60A

PRODUCT CUSTOMER DRAWING

DOCUMENT NUMBER	DOC TYPE	DOC PART	REVISION
SD-39970-003	PSD	001	E1

MATERIAL NUMBER	CUSTOMER	SHEET NUMBER
SEE CHART	GENERAL MARKET	1 OF 2

FORMAT: Eng-lega-master-tb-prod-B
REVISION: E1
DATE: 2021/05/01

STD MATERIAL NUMBER	OPTIONAL 10A IMPRINT	OPTIONAL 11A IMPRINT	OPTIONAL SS SCREW (OPT. -56)	OPTIONAL SLOTTED SCREW	OPTIONAL SLOTTED SCREW W/10A IMPRINT	OPTIONAL SLOTTED SCREW W/11A IMPRINT	NUMBER OF CIRCUITS	"A" DIM.	"B" DIM.
399700102	----------	399730102	----------	399700402	399720402	399730402	2	21.84 [.86]	10.16 [.400]
399700103	----------	399730103	----------	----------	399720403	399730403	3	32.00 [1.26]	20.32 [.800]
399700104	----------	399730104	399700604	----------	399720404	399730404	4	42.16 [1.66]	30.48 [1.200]
399700105	399720105	399730105	399700605	399700405	399720405	399730405	5	52.32 [2.06]	40.64 [1.600]
399700106	399720106	399730106	399700606	----------	399720406	399730406	6	62.48 [2.46]	50.80 [2.000]
399700107	399720107	399730107	399700607	399700407	399720407	399730407	7	72.64 [2.86]	60.96 [2.400]
399700108	----------	399730108	399700608	399700408	399720408	399730408	8	82.80 [3.26]	71.12 [2.800]
399700109	399720109	399730109	399700609	399700409	399720409	399730409	9	92.96 [3.66]	81.28 [3.200]
399700110	399720110	399730110	399700610	399700410	399720410	399730410	10	103.12 [4.06]	91.44 [3.600]
399700111	399720111	399730111	399700611	399700411	399720411	399730411	11	113.28 [4.46]	101.60 [4.000]
399700112	399720112	399730112	399700612	399700412	399720412	399730412	12	123.44 [4.86]	111.76 [4.400]
399700113	399720113	399730113	399700613	399700413	399720413	399730413	13	133.60 [5.26]	121.92 [4.800]
399700114	399720114	399730114	399700614	399700414	399720414	399730414	14	143.76 [5.66]	132.08 [5.200]

THIS DRAWING CONTAINS INFORMATION THAT IS PROPRIETARY TO MOLEX ELECTRONIC TECHNOLOGIES, LLC AND SHOULD NOT BE USED WITHOUT WRITTEN PERMISSION

DIMENSION UNITS: mm/IN | SCALE: 3:2

GENERAL TOLERANCES (UNLESS SPECIFIED)

	MM	INCH
4 PLACES	±	±
3 PLACES	±	± 0.005
2 PLACES	± 0.13	± 0.01
1 PLACE	± 0.3	±
0 PLACES	±	±
ANGULAR TOL	± 2.0 °	

DRAFT WHERE APPLICABLE MUST REMAIN WITHIN DIMENSIONS

CURRENT REV DESC: REMOVED OBSOLETED PART NUMBERS AS PER PCN#514486.

EC NO: 774109
DRWN: RAVINR1 2023/12/27
CHK'D: GGA 2024/01/29
APPR: GGA 2024/01/29

INITIAL REVISION:
DRWN: R.STONE 2002/09/13
APPR: L.ROTHAUS 2002/09/27

THIRD ANGLE PROJECTION | DRAWING: B-SIZE | SERIES: 39970

molex

10.16MM/.400 SINGLE ROW
BTS ASSY, 6 AWG, 300V 60A

PRODUCT CUSTOMER DRAWING

DOCUMENT NUMBER	DOC TYPE	DOC PART	REVISION
SD-39970-003	PSD	001	E1

MATERIAL NUMBER	CUSTOMER	SHEET NUMBER
SEE CHART	GENERAL MARKET	2 OF 2

DOCUMENT STATUS	P1	RELEASE DATE	2024/01/29 05:14:18

FORMAT: Eng-lega-master-tb-prod-B
REVISION: E1
DATE: 2021/05/01