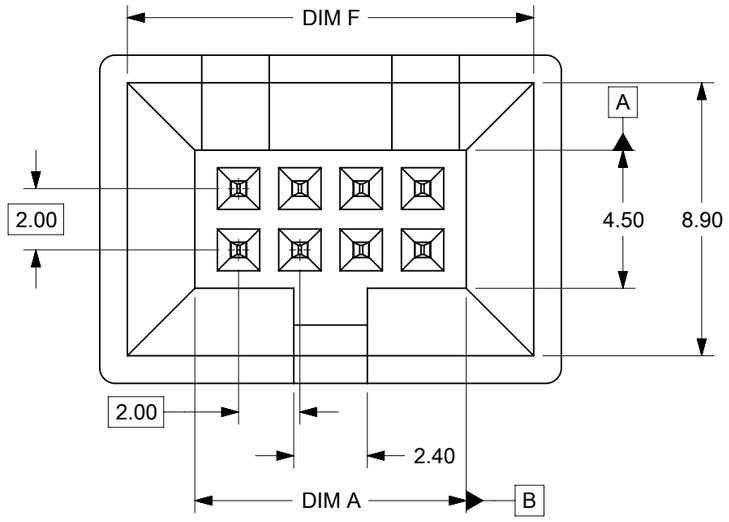


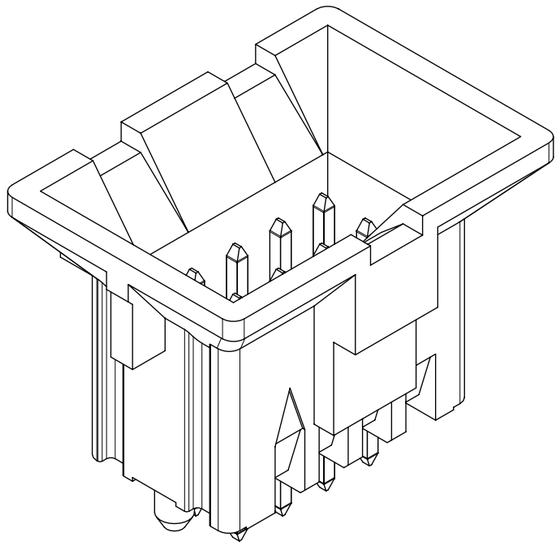

NOTES:

1. MATERIALS:
   HOUSING: LIQUID CRYSTALLINE POLYMER, GLASSED-FILLED
   UL 94V-0, BLACK
   TERMINALS: 0.50mm SQ. PHOSPHOR BRONZE
2. FINISHES: SEE PART NUMBER LEGEND
3. PRODUCT SPECIFICATION: PS-151013-0001
4. PACKAGING SPECIFICATION TUBE: PK-151013-0001 T&R: 1510130003-PK
5. MATES WITH:
   51110-XX50 (4 TO 20 CKTS)
   51110-XX51 (8 TO 12 CKTS ONLY)
   51110-XX52 (4, 6, AND 14 TO 20 CKTS)
   51110-XX60 (4 TO 12 CKTS)
6. PARTS CONFORMS TO CLASS "B" REQUIREMENTS OF COSMETIC SPECIFICATION PS-45499-002
7. MOLEX LOGO AND CAVITY ID TO BE LOCATED AS SHOWN
8. NON-FUNCTIONAL CORING IS SUBJECTED TO CHANGES WITHOUT NOTICE
9. DATECODE TO BE LOCATED APPROXIMATELY AS SHOWN
10. PLATING ID MARKING FOR DIFFERENT PLATING OPTIONS TO BE LOCATED AFTER DATE CODE AS SHOWN

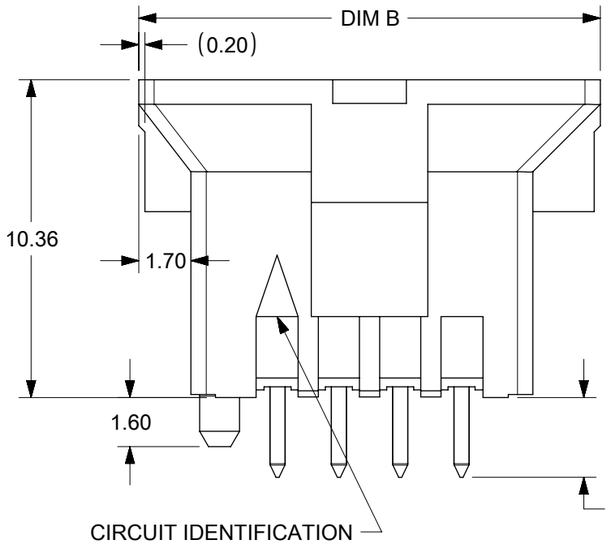


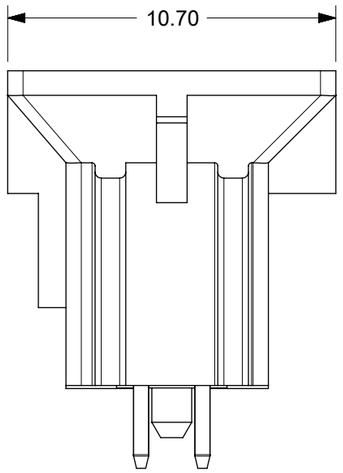


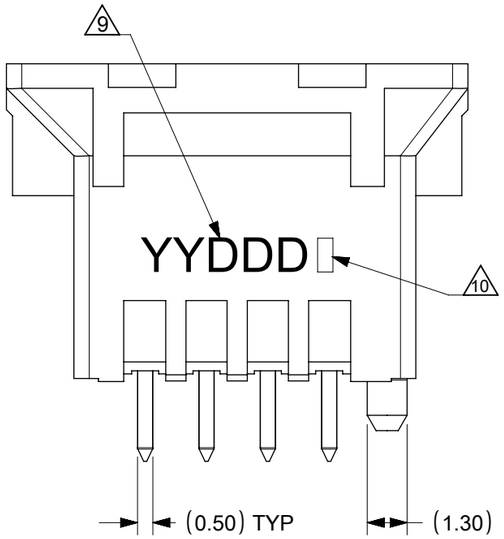


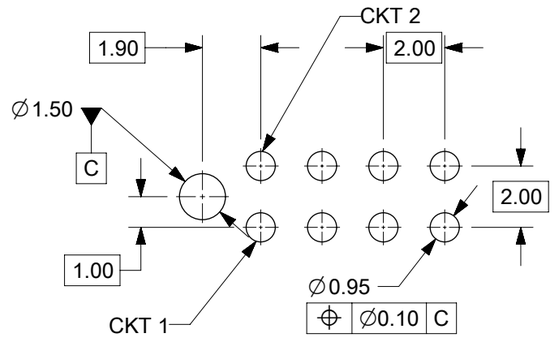


RECOMMENDED PCB LAYOUT
GENERAL TOLERANCE ±0.05

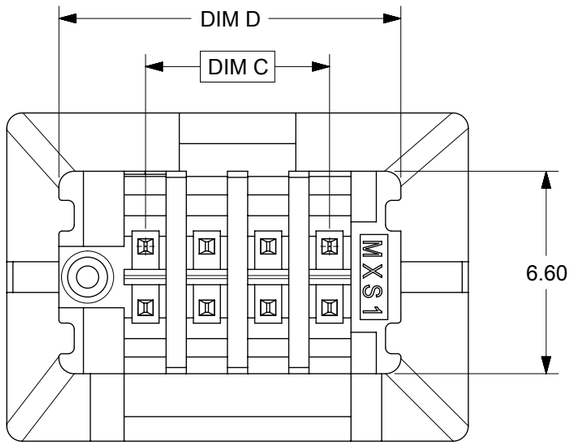


| | |
|---|---|
| SYMBOLS | |
| E = 0 | |
| F = 0 | |
| P = 0 | |
| S = 0 | |
| ▼ = 0 | |
| C = 0 | |
| ☒ = 0 | |
| ■ = 0 | |
| V = 0 | |

THIS DRAWING CONTAINS INFORMATION THAT IS PROPRIETARY TO MOLEX ELECTRONIC TECHNOLOGIES, LLC AND SHOULD NOT BE USED WITHOUT WRITTEN PERMISSION

| DIMENSION UNITS | SCALE |
|---|---|
| mm | |
| GENERAL TOLERANCES (UNLESS SPECIFIED) | |
| ANGULAR TOL ± 3.0 ° | |
| 4 PLACES | ± |
| 3 PLACES | ± |
| 2 PLACES | ± 0.25 |
| 1 PLACE | ± |
| 0 PLACES | ± |
| DRAFT WHERE APPLICABLE MUST REMAIN WITHIN DIMENSIONS | |

CURRENT REV DESC:

EC NO: 758477
DRWN: SUAIFR 2023/06/27
CHK'D: SUAIFR 2023/08/02
APPR: MRAMAKRISHNA 2023/08/02

INITIAL REVISION:
DRWN: GMENARLY 2014/05/02
APPR: KHLIM 2014/06/30

THIRD ANGLE PROJECTION | DRAWING: A3-SIZE | SERIES: 151013

molex

2MM PITCH MILLIGRID BMI
VERTICAL HEADER

PRODUCT CUSTOMER DRAWING

| DOCUMENT NUMBER | DOC TYPE | DOC PART | REVISION |
|---|---|---|---|
| SD-151013-0001 | PSD | 000 | A11 |

| MATERIAL NUMBER | CUSTOMER | SHEET NUMBER |
|---|---|---|
| | GENERAL MARKET | 1 OF 3 |

| DOCUMENT STATUS | P1 | RELEASE DATE | 2023/08/02 15:41:54 |
|---|---|---|---|

FORMAT: master-lb-prod-A3
REVISION: H
DATE: 2018/01/18

# PART NUMBER LEGEND

151013-X X Y Y

PLATING OPTIONS:

DIM E - PIN LENGTHS:
0: 2.60mm
1: 4.00mm
2: 3.00mm
3: 3.50mm
4: 4.50mm
5: 2.10mm

| | |
|---|---|
| 04 - 20 | 04 - 20 CKT IN TUBE |
| 64 - 80 | 64 - 80 CKT IN T&R WITHOUT KAPTON TAPE<br><br>64 = 04CKT<br>66 = 06CKT<br>-<br>-<br>-<br>78 = 18CKT<br>80 = 20CKT |
| 84 - 98 | 84 - 98 CKT IN T&R WITH KAPTON TAPE<br><br>84 = 04CKT<br>86 = 06CKT<br>-<br>-<br>-<br>98 = 18CKT<br>00 = 20CKT |

| ASSEMBLY PART NUMBER | CKT SIZE | DIM A | DIM B | DIM C | DIM D | DIM F |
|---|---|---|---|---|---|---|
| 151013-XX04 | 4 | 4.85 | 11.05 | 2.00 | 7.15 | 9.25 |
| 151013-XX06 | 6 | 6.85 | 13.05 | 4.00 | 9.15 | 11.25 |
| 151013-XX08 | 8 | 8.85 | 15.05 | 6.00 | 11.15 | 13.25 |
| 151013-XX10 | 10 | 10.85 | 17.05 | 8.00 | 13.15 | 15.25 |
| 151013-XX12 | 12 | 12.85 | 19.05 | 10.00 | 15.15 | 17.25 |
| 151013-XX14 | 14 | 14.85 | 21.05 | 12.00 | 17.15 | 19.25 |
| 151013-XX16 | 16 | 16.85 | 23.05 | 14.00 | 19.15 | 21.25 |
| 151013-XX18 | 18 | 18.85 | 25.05 | 16.00 | 21.15 | 23.25 |
| 151013-XX20 | 20 | 20.85 | 27.05 | 18.00 | 23.15 | 25.25 |

# CIRCUIT IDENTIFICATION ON HOUSING

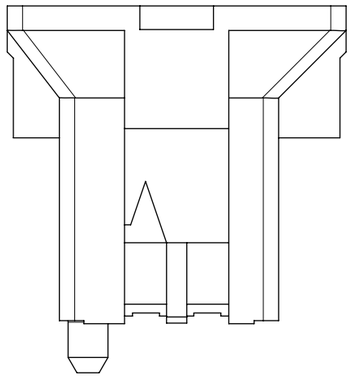

FOR 4 & 6 CIRCUITS

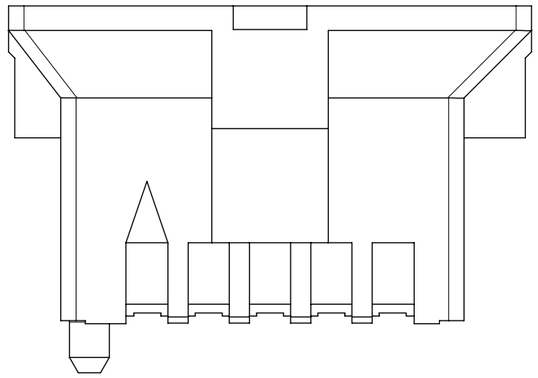

FOR 8 TO 20 CIRCUITS

| PLATING THICKNESS | PLATING ID MARK 10 |
|---|---|
| 2 OR 6: 0.76µm MIN. GOLD ON CONTACT, 1.27µm MATTE TIN ON SOLDERTAIL OVER 1.27µm MIN. NICKEL UNDERPLATE OVERALL | |
| 3: 0.38µm MIN. GOLD ON CONTACT, 1.27µm MATTE TIN ON SOLDERTAIL OVER 1.27µm MIN. NICKEL UNDERPLATE OVERALL | / |
| 4: 0.05µm MIN. GOLD FLASH ON CONTACT, 1.27µm MATTE TIN ON SOLDERTAIL OVER 1.27µm MIN. NICKEL UNDERPLATE OVERALL | < |
| 5: 2.50µm MIN. MATTE TIN ON CONTACT, 1.27µm MATTE TIN ON SOLDERTAIL OVER 1.27µm MIN. NICKEL UNDERPLATE OVERALL | |

| DOCUMENT STATUS | P1 | RELEASE DATE | 2023/08/02 15:41:54 |
|---|---|---|---|

FORMAT: master-tb-prod-A3
REVISION: H
DATE: 2018/01/18

SYMBOLS
A = 0
B = 0
C = 0
D = 0
E = 0
F = 0
G = 0
H = 0

DIMENSION UNITS: mm
SCALE:
GENERAL TOLERANCES (UNLESS SPECIFIED)
ANGULAR TOL ± 3.0 °
4 PLACES ±
3 PLACES ±
2 PLACES ± 0.25
1 PLACE ±
0 PLACES ±
DRAFT WHERE APPLICABLE MUST REMAIN WITHIN DIMENSIONS

THIS DRAWING CONTAINS INFORMATION THAT IS PROPRIETARY TO MOLEX ELECTRONIC TECHNOLOGIES, LLC AND SHOULD NOT BE USED WITHOUT WRITTEN PERMISSION

CURRENT REV DESC:

EC NO: 758477
DRWN: SUAIFR 2023/06/27
CHK'D: SUAIFR 2023/08/02
APPR: MRAMAKRISHNA 2023/08/02

INITIAL REVISION:
DRWN: GMENARLY 2014/05/02
APPR: KHLIM 2014/06/30

THIRD ANGLE PROJECTION
DRAWING: A3-SIZE
SERIES: 151013

molex

2MM PITCH MILLIGRID BMI
VERTICAL HEADER

PRODUCT CUSTOMER DRAWING

| DOCUMENT NUMBER | DOC TYPE | DOC PART | REVISION |
|---|---|---|---|
| SD-151013-0001 | PSD | 000 | A11 |

| MATERIAL NUMBER | CUSTOMER | SHEET NUMBER |
|---|---|---|
| SEE TABLE | GENERAL MARKET | 2 OF 3 |

| ASSEMBLY PART NUMBER TUBE | ASSEMBLY PART NUMBER TAPE & REEL | CKT SIZE | DIM A | DIM B | DIM C | DIM D | DIM F | KAPTON TAPE |
|---|---|---|---|---|---|---|---|---|
| ---- | 151013-3588 | 08 | 8.85 | 15.05 | 6.00 | 11.15 | 13.25 | YES |
| ---- | 151013-2092 | 12 | 12.85 | 19.05 | 10.00 | 15.15 | 17.25 | YES |
| ---- | 151013-2096 | 16 | 16.85 | 23.05 | 14.00 | 19.15 | 21.25 | YES |
| ---- | 151013-2076 | 16 | 16.85 | 23.05 | 14.00 | 19.15 | 21.25 | NO |
| 151013-3020 | ---- | 20 | 20.85 | 27.05 | 18.00 | 23.15 | 25.25 | NO |
| 151013-3520 | 151013-3580 | 20 | 20.85 | 27.05 | 18.00 | 23.15 | 25.25 | NO |
| 151013-2520 | 151013-2500 | 20 | 20.85 | 27.05 | 18.00 | 23.15 | 25.25 | YES |
| | 151013-2580 | 20 | 20.85 | 27.05 | 18.00 | 23.15 | 25.25 | NO |
| 151013-2220 | 151013-2200 | 20 | 20.85 | 27.05 | 18.00 | 23.15 | 25.25 | YES |

A11

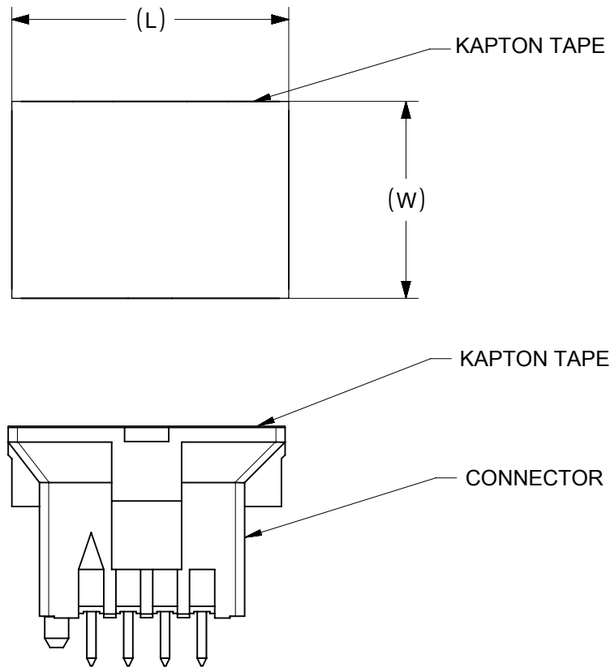


PART WITH KAPTON TAPE
8CKT SHOWN FOR ILLUSTRATION ONLY

NOTE:
IN TABLE HIGHLIGHTED F.G PART FOLLOWS PART LEGENDS FOR LENOVO & INTEL

| ASSEMBLY PART NUMBER TUBE | CKT SIZE | DIM A | DIM B | DIM C | DIM D PIN LENGTH | KAPTON TAPE |
|---|---|---|---|---|---|---|
| 151013-6508 | 08 | 8.85 | 15.05 | 6.00 | 2.1 | YES |

| SYMBOLS | |
|---|---|
| F = 0 | |
| E = 0 | |
| B = 0 | |
| S = 0 | |
| ▼ = 0 | |
| C = 0 | |
| ☒ = 0 | |
| ■ = 0 | |
| V = 0 | |

THIS DRAWING CONTAINS INFORMATION THAT IS PROPRIETARY TO MOLEX ELECTRONIC TECHNOLOGIES, LLC AND SHOULD NOT BE USED WITHOUT WRITTEN PERMISSION

| DIMENSION UNITS | SCALE |
|---|---|
| mm | |

GENERAL TOLERANCES (UNLESS SPECIFIED)

| | |
|---|---|
| ANGULAR TOL | ± 3.0 ° |
| 4 PLACES | ± |
| 3 PLACES | ± |
| 2 PLACES | ± 0.25 |
| 1 PLACE | ± |
| 0 PLACES | ± |

DRAFT WHERE APPLICABLE MUST REMAIN WITHIN DIMENSIONS

CURRENT REV DESC:

EC NO: 758477
DRWN: SUAIFR 2023/06/27
CHK'D: SUAIFR 2023/08/02
APPR: MRAMAKRISHNA 2023/08/02

INITIAL REVISION:
DRWN: GMENARLY 2014/05/02
APPR: KHLIM 2014/06/30

THIRD ANGLE PROJECTION | DRAWING: A3-SIZE | SERIES: 151013

molex

2MM PITCH MILLIGRID BMI
VERTICAL HEADER

PRODUCT CUSTOMER DRAWING

| DOCUMENT NUMBER | DOC TYPE | DOC PART | REVISION |
|---|---|---|---|
| SD-151013-0001 | PSD | 000 | A11 |

| MATERIAL NUMBER | CUSTOMER | SHEET NUMBER |
|---|---|---|
| SEE CHART | GENERAL MARKET | 3 OF 3 |

| DOCUMENT STATUS | P1 | RELEASE DATE | 2023/08/02 15:41:54 |
|---|---|---|---|

FORMAT: master-tb-prod-A3
REVISION: H
DATE: 2018/01/18