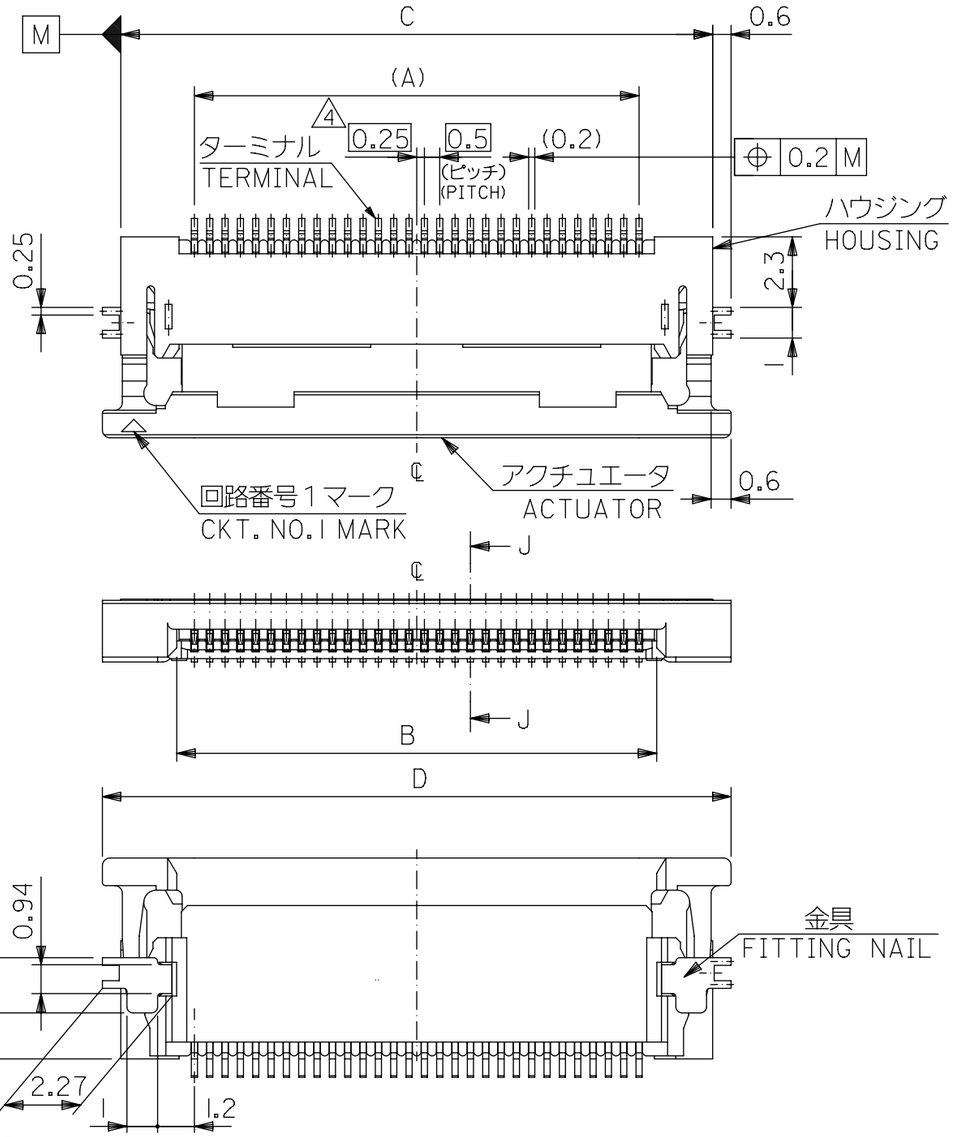

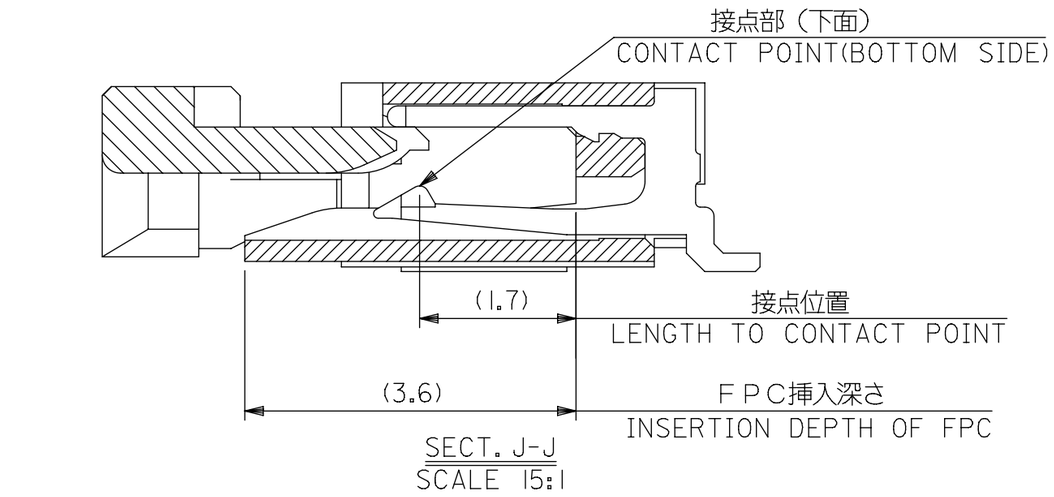

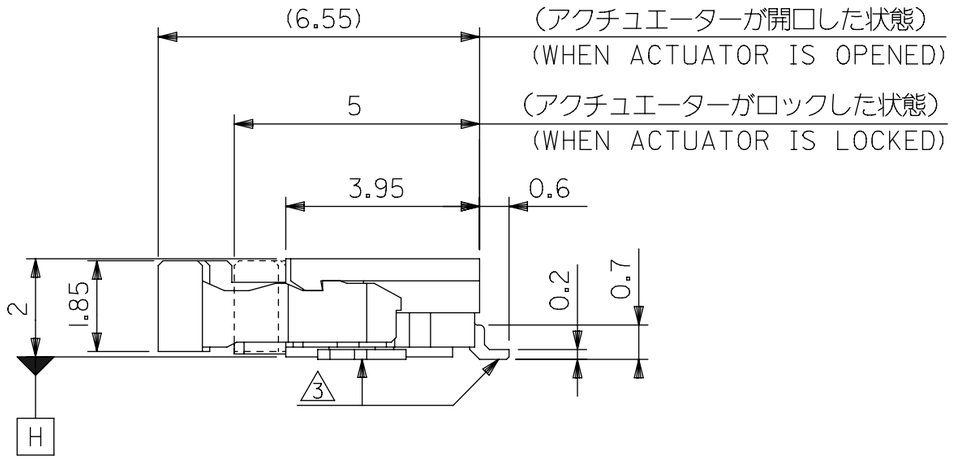

注記
NOTES

1. 使用材料
MATERIAL

ハウジング HOUSING	：４６ナイロン，ＵＬ９４Ｖ－０ :46NYLON
アクチュエーター ACTUATOR	：ＰＰＳ，ＵＬ９４Ｖ－０ :PPS
ターミナル TERMINAL	:リン青銅（t=0．2）、錫・ビスマスメッキ 1．0～3．0 MICRO METER MIN. ニッケル下地 1．0～3．0 MICRO METER MIN. :PHOS-BRO,TIN-BISMUTH-PLATE 1.0~3.0 MICRO METER MIN. OVER NICKEL 1.0~3.0 MICRO METER MIN.
金具 FITTING NAIL	:リン青銅（t=0．2）、錫メッキ 1．0～3．0 MICRO METER MIN. ニッケル下地 1．0～3．0 MICRO METER MIN. :PHOS-BRO,TIN-PLATE 1.0~3.0 MICRO METER MIN. OVER NICKEL 1.0~3.0 MICRO METER MIN.

2. エンボステープ梱包時は、アクチュエーターがロックした状態とする。
IN THE PACKAGE,ACTUATOR OF PART NO.54132-**31 SHOULD BE LOCKED.

3. ソルダーテール半田付け面のズレ量、及び金具半田付け面のズレ量は、基準面 H に対し上方向0．１ＭＡＸ．下方向0．１５ＭＡＸ．とする。
MISALIGNMENT OF SOLDER TAILS AND FITTING NAIL FROM H UPPER DIRECTION:0.1 MAX.,LOWER DIRECTION:0.15MAX.

4. 偶数極に適用
APPLY FOR EVEN CIRCUIT.

5. パターンはくり止め用金具
FITTING NAIL FOR PREVENTION OF PEELING OF P.C.B. PATTERN.

6. 本製品は５４１３２－＊＊３１の鉛フリー品である。
THIS PRODUCT IS LEAD FREE OF 54132-**31

GENERAL TOLERANCES (UNLESS SPECIFIED)	
10^{UNDER}	±0.2
10^{OVER} 30^{UNDER}	±0.25
30^{OVER}	±0.3
ANGULAR	±3 °

30.5	29.3	25.65	24.5	54132-5097	54132-5039	50
28.0	26.8	23.15	22.0	-4597	-4539	45
27.0	25.8	22.15	21.0	-4397	-4339	43
25.5	24.3	20.65	19.5	-4097	-4039	40
24.5	23.3	19.65	18.5	-3897	-3839	38
23.5	22.3	18.65	17.5	-3697	-3639	36
23.0	21.8	18.15	17.0	-3597	-3539	35
22.5	21.3	17.65	16.5	-3497	-3439	34
22.0	20.8	17.15	16.0	-3397	-3339	33
21.5	20.3	16.65	15.5	-3297	-3239	32
20.5	19.3	15.65	14.5	54132-3097	54132-3039	30
D	C	B	A	EMBOSSED TAPE ORDER No. オーダー番号	MATERIAL．NO．	CKT．
				54132-**39	MODEL.NO.	

THIS DRAWING CONTAINS INFORMATION THAT IS PROPRIETARY TO MOLEX ELECTRONIC TECHNOLOGIES, LLC AND SHOULD NOT BE USED WITHOUT WRITTEN PERMISSION

DIMENSION UNITS: mm | SCALE: NTS
GENERAL TOLERANCES (UNLESS SPECIFIED)
ANGULAR TOL ± °
4 PLACES ±
3 PLACES ±
2 PLACES ±
1 PLACE ±
0 PLACES ±
DRAFT WHERE APPLICABLE MUST REMAIN WITHIN DIMENSIONS

CURRENT REV DESC:
EC NO: 758488
DRWN: RAJMOK 2023/07/26
CHK'D: HSHIMOYAMA 2023/08/03
APPR: YNAITO 2023/08/03
INITIAL REVISION:
DRWN: MNABEI 2003/12/16
APPR: MSASAO 2003/12/17

THIRD ANGLE PROJECTION | DRAWING: A3-SIZE | SERIES: 54132

molex

0.5 FPC CONN ZIF
HOUSING ASSY FOR SMT -LEAD FREE-

PRODUCT CUSTOMER DRAWING

DOCUMENT NUMBER	DOC TYPE	DOC PART	REVISION
SD-54132-060	PSD	001	D

MATERIAL NUMBER	CUSTOMER	SHEET NUMBER
SEE TABLE	GENERAL MARKET	1 OF 2

DOCUMENT STATUS	P1	RELEASE DATE	2023/08/03 11:20:36

FORMAT: master-ib-prod-A3
REVISION: J1
DATE: 2021/05/01

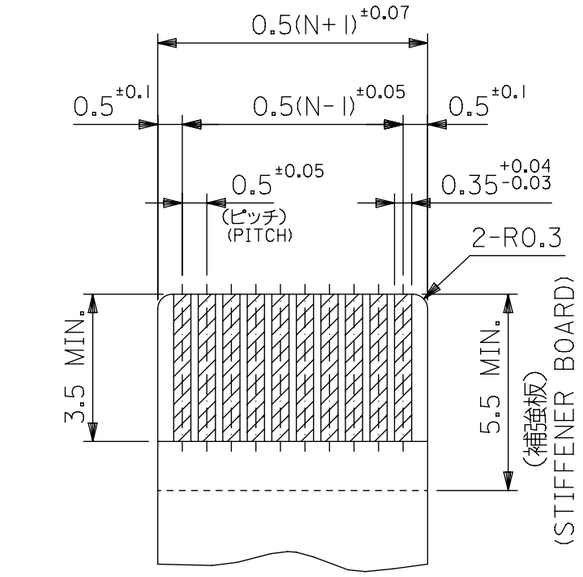

適合ＦＰＣ推奨寸法
APPLICABLE FPC RECOMMENDED DIMENSION

(仕上がり厚さ： 0.3±0.03)
(THICKNESS:0.3±0.03)

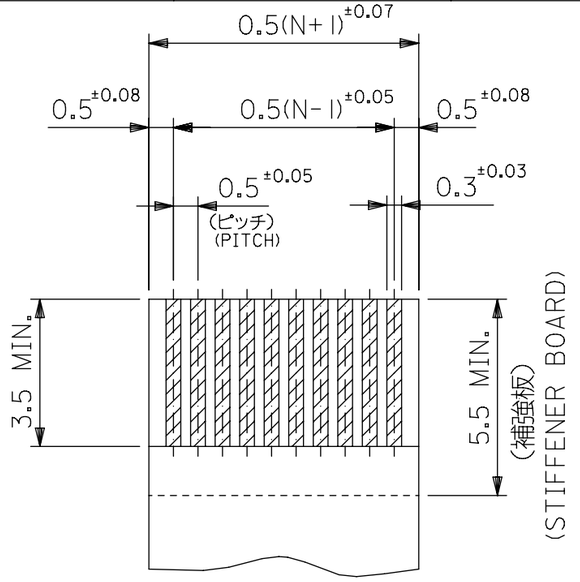

適合ＦＦＣ推奨寸法
APPLICABLE FFC RECOMMENDED DIMENSION

(仕上がり厚さ： 0.3±0.03)
(THICKNESS:0.3±0.03)

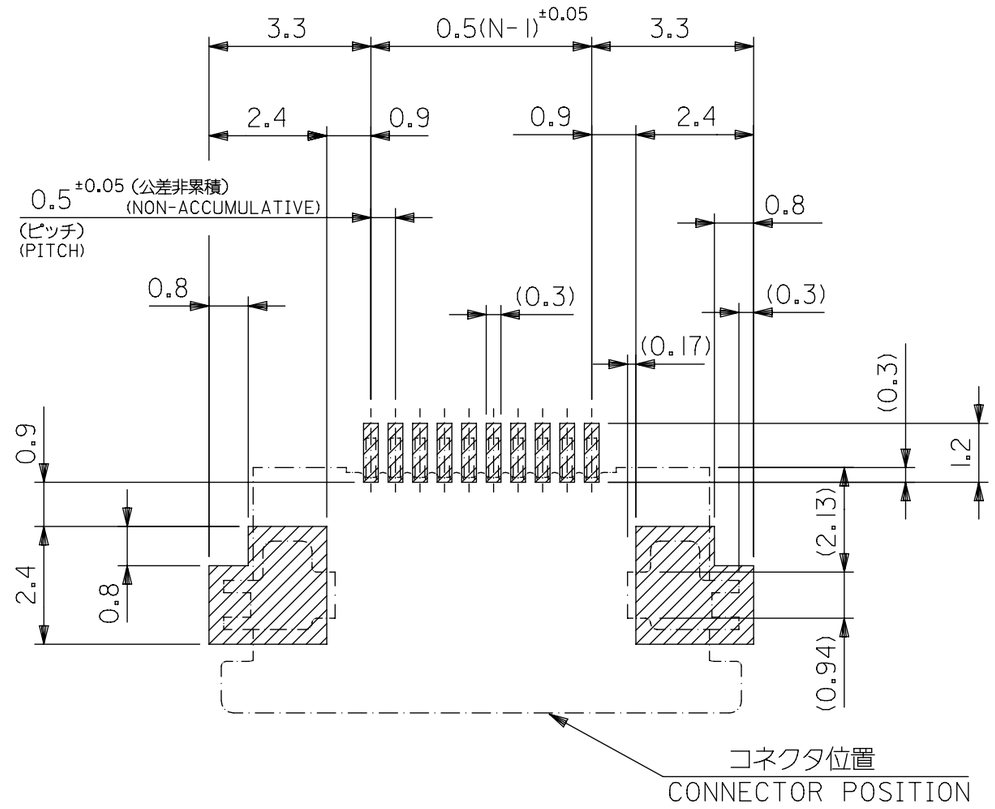

参考基板レイアウト
RECOMMENDED PC BOARD PATTERN DIMENSON(REF.)

(マウント面)
(MOUNTING SIDE)

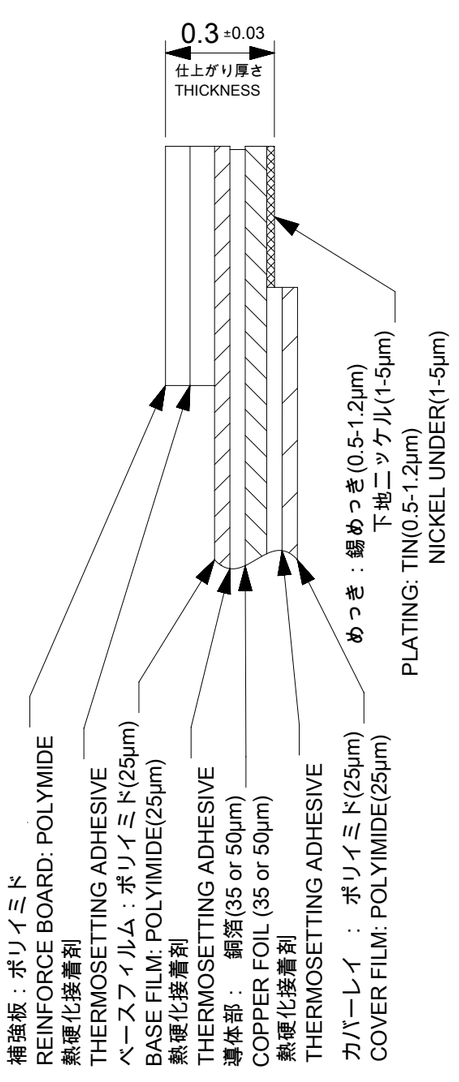

FPC構成推奨仕様
RECOMMENDED STRUCTURE OF FPC

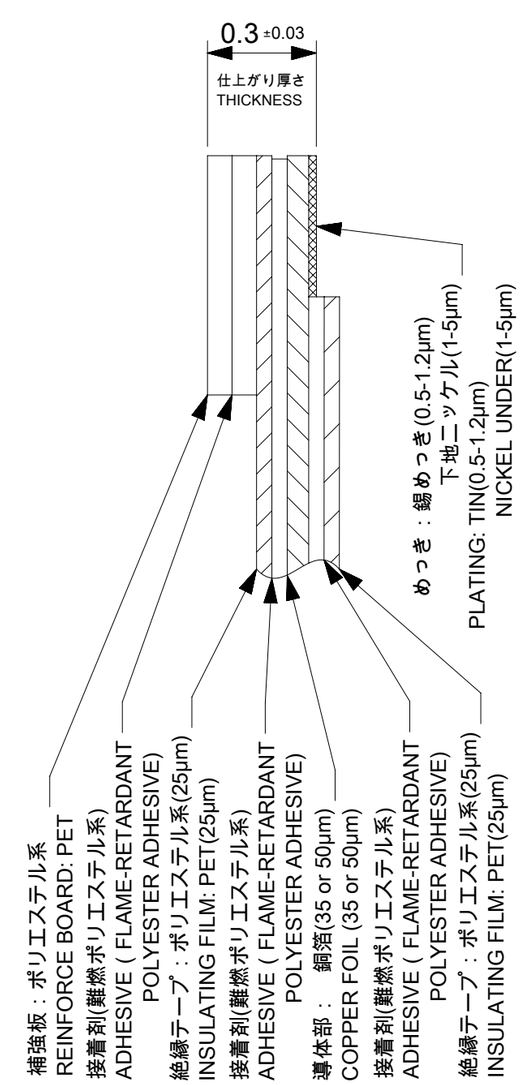

FFC構成推奨仕様
RECOMMENDED STRUCTURE OF FFC

ＦＰＣ／ＦＦＣについて
打抜き方向は導体側から補強板側を推奨いたします。
導体部については軟銅箔３５マイクロメーターまたは５０マイクロメーター
RECOMMENDED PUNCHER DIRECTION:
FROM CONDUCTOR SIDE TO STIFFENER BOARD SIDE.
RECOMMENDED CONDUCTOR SPEC.:
THICKNESS OF SOFT COPPER FOIL:
35 micrometer or 50 micrometer

GENERAL TOLERANCES (UNLESS SPECIFIED)	
10^{UNDER}	±0.2
10^{OVER} 30^{UNDER}	±0.25
30^{OVER}	±0.3
ANGULAR	±3 °

THIS DRAWING CONTAINS INFORMATION THAT IS PROPRIETARY TO MOLEX ELECTRONIC TECHNOLOGIES, LLC AND SHOULD NOT BE USED WITHOUT WRITTEN PERMISSION

DIMENSION UNITS	SCALE
mm	NTS

GENERAL TOLERANCES (UNLESS SPECIFIED)
ANGULAR TOL ± °
4 PLACES ±
3 PLACES ±
2 PLACES ±
1 PLACE ±
0 PLACES ±
DRAFT WHERE APPLICABLE MUST REMAIN WITHIN DIMENSIONS

CURRENT REV DESC:

EC NO: 758488
DRWN: RAJMOK 2023/07/26
CHK'D: HSHIMOYAMA 2023/08/03
APPR: YNAITO 2023/08/03

INITIAL REVISION:
DRWN: MNABEI 2003/12/16
APPR: MSASAO 2003/12/17

THIRD ANGLE PROJECTION | DRAWING: A3-SIZE | SERIES: 54132

molex

0.5 FPC CONN ZIF
HOUSING ASSY FOR SMT -LEAD FREE-

PRODUCT CUSTOMER DRAWING

DOCUMENT NUMBER	DOC TYPE	DOC PART	REVISION
SD-54132-060	PSD	001	D

MATERIAL NUMBER	CUSTOMER	SHEET NUMBER
SEE SHEET-1	GENERAL MARKET	2 OF 2

DOCUMENT STATUS	P1	RELEASE DATE	2023/08/03 11:20:36

FORMAT: master-tb-prod-A3
REVISION: J1
DATE: 2021/05/01

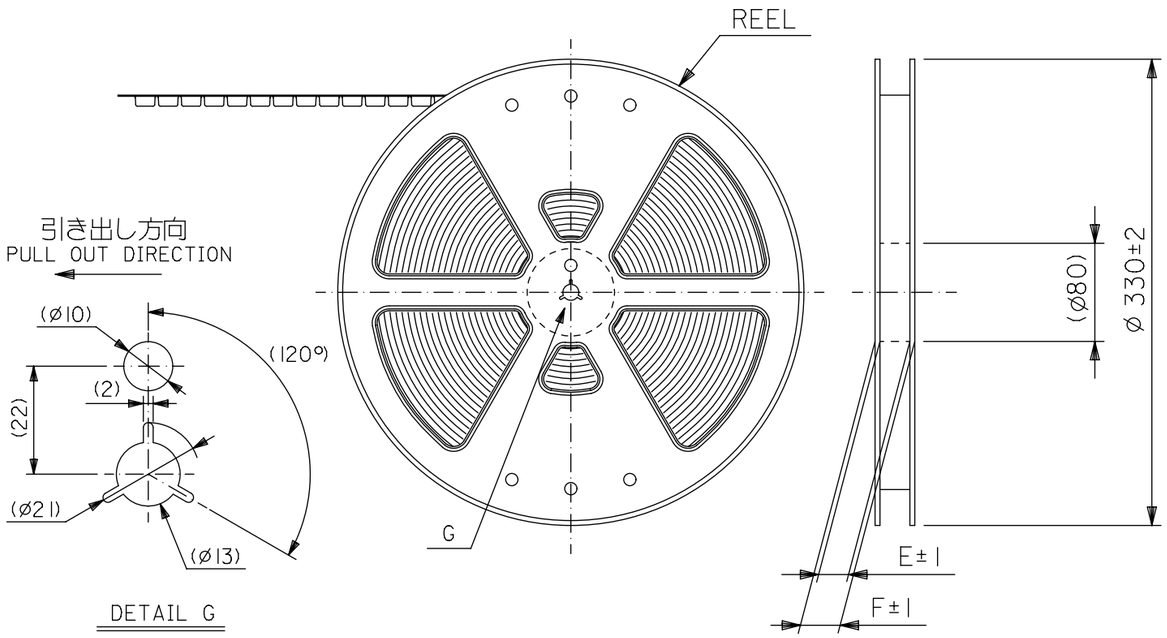

DETAIL G

NOTES

1. 梱包数量：１５００個／リール
   NUMBER OF CONNECTORS : 1500PCS/REEL
2. リードテープ長さ LEAD TAPE LENGTH

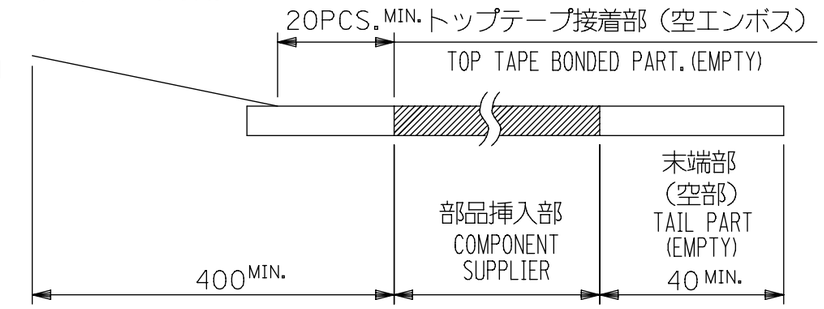

3. トップテープの剥離強度： 0.1N ～ 1.3N{10gf ～ 130gf}
   （剥離方向は下図参照）
   尚、本規格値は出荷時に適用。（但し、輸送時に剥離が発生しないこと。）
   PEELING OFF FORCE OF TOP TAPE : 0.1N ～ 1.3N{10gf ～ 130gf}
   (PEELING DIRECTION AS SHOWN IN FOLLOWING FIG.)
   THIS REQUIREMENT SHOULD BE APPLIED AT SHIPMENT.
   PEEL OFF SHOULD NOT BE ALLOWED , DURING TRANSPORTATION.

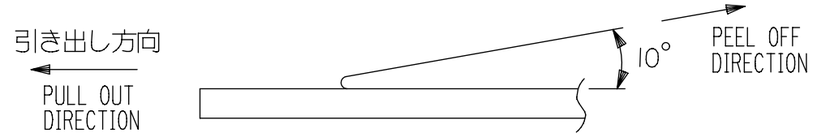

5. 材料　　キャリアテープ：ポリプロピレン（ＰＰ）
   トップテープ：ＰＥＴ，ＰＥ，ＰＥＦ
   リール：ポリスチレン（ＰＳ）<リサイクル材を含む>

   MATERIAL CARRIER TAPE:POLYPROPYLENE
   TOP TAPE:PET,PE,PEF
   REEL:POLYSTYREN(PS)
   <RECYCLE MATERIAL CONTAINED>

6. 本製品は５４１３２－＊＊９２の鉛フリー品である。
   THIS PRODUCT IS LEAD FREE OF 54132-**92

GENERAL TOLERANCES (UNLESS SPECIFIED)	
10^{UNDER}	±0.2
10^{OVER} 30^{UNDER}	±0.25
30^{OVER}	±0.3
ANGULAR	±3 °

GENERAL TOLERANCES (UNLESS SPECIFIED)	
ANGULAR TOL ±	°
4 PLACES ±	
3 PLACES ±	
2 PLACES ±	
1 PLACE ±	
0 PLACES ±	

DRAFT WHERE APPLICABLE MUST REMAIN WITHIN DIMENSIONS

54132-**97 | MODEL NO.

THIS DRAWING CONTAINS INFORMATION THAT IS PROPRIETARY TO MOLEX ELECTRONIC TECHNOLOGIES, LLC AND SHOULD NOT BE USED WITHOUT WRITTEN PERMISSION

DIMENSION UNITS	SCALE
mm	NTS

CURRENT REV DESC:

EC NO: 719890
DRWN: NARENC 2022/08/22
CHK'D: SMARUYAMA 2022/09/05
APPR: YNAITO 2022/09/05

INITIAL REVISION:
DRWN: MNABEI 2003/12/16
APPR: MSASAO 2003/12/17

THIRD ANGLE PROJECTION | DRAWING: A3-SIZE | SERIES: 54132

molex

EMBOSSED TAPE PACKAGE
FOR 0.5 FPC CONN.ZIF -LEAD FREE-

PRODUCT CUSTOMER DRAWING

DOCUMENT NUMBER	DOC TYPE	DOC PART	REVISION
SD-54132-061	PSD	001	B

MATERIAL NUMBER	CUSTOMER	SHEET NUMBER
SEE TABLE	GENERAL MARKET	1 OF 2

DOCUMENT STATUS	P1	RELEASE DATE	2022/09/05 05:51:57

FORMAT: master-ib-prod-A3
REVISION: J1
DATE: 2021/05/01

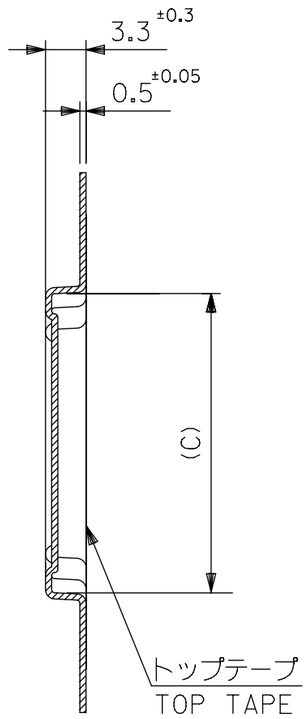

SECT:Y-Y

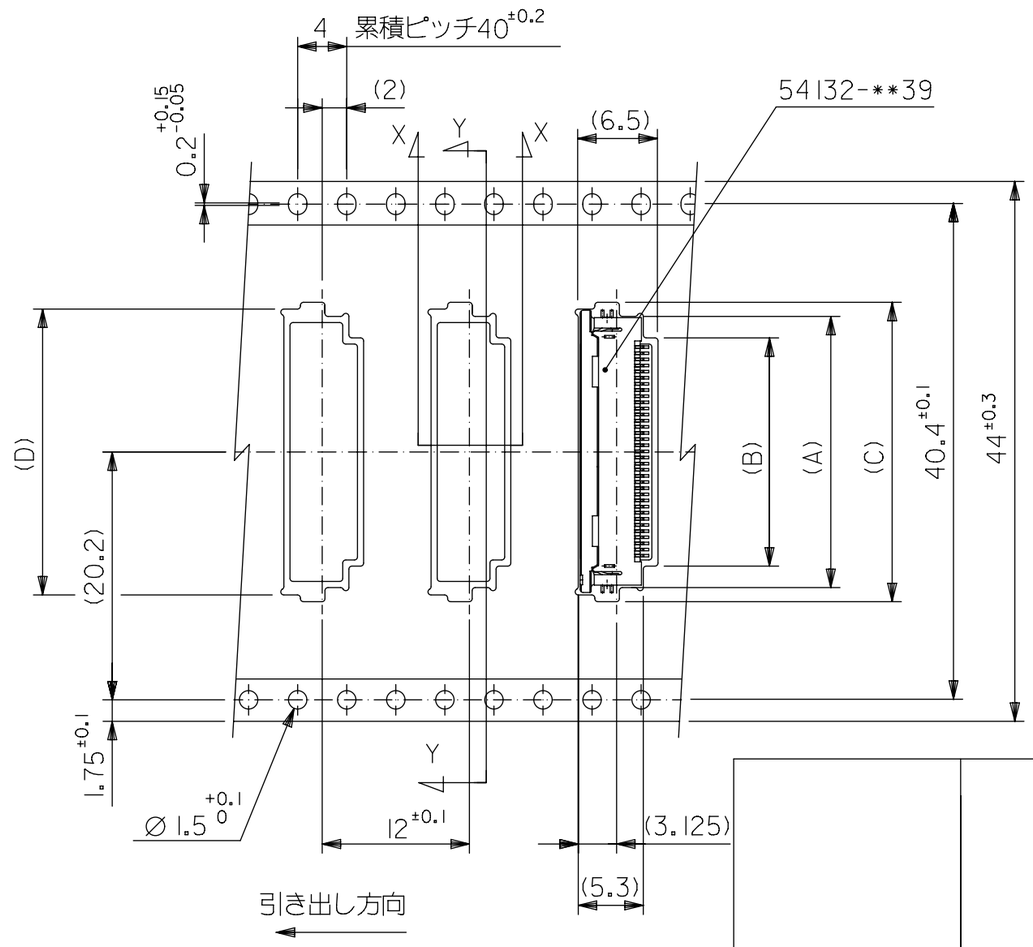

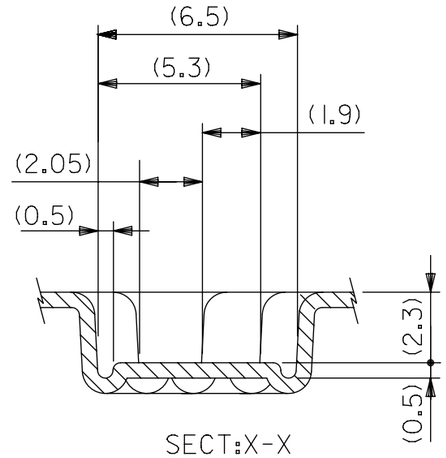

SECT:X-X
(SCALE:5-1)

キャリアテープ幅 CARRIER TAPE WIDTH	F	E	D	C	B	A	ENG. NO.	CKT.
44	49.4	45.4	30.8	31.6	26.1	29.6	54132-5097	50
			28.3	29.4	23.6	27.1	-4597	45
			27.3	28.4	22.6	26.1	-4397	43
			25.8	26.9	21.1	24.6	-4097	40
			24.8	25.9	20.1	23.6	-3897	38
			23.8	24.9	19.1	22.6	-3697	36
			23.3	24.4	18.6	22.1	-3597	35
			22.8	23.9	18.1	21.6	-3497	34
			22.3	23.4	17.6	21.1	-3397	33
			21.8	22.9	17.1	20.6	-3297	32
			20.8	21.9	16.1	19.6	54132-3097	30

54132-**97 MODEL.NO.

GENERAL TOLERANCES (UNLESS SPECIFIED)	
10 UNDER	±0.2
10 OVER 30 UNDER	±0.25
30 OVER	±0.3
ANGULAR	±3 °

THIS DRAWING CONTAINS INFORMATION THAT IS PROPRIETARY TO MOLEX ELECTRONIC TECHNOLOGIES, LLC AND SHOULD NOT BE USED WITHOUT WRITTEN PERMISSION

DIMENSION UNITS: mm | SCALE: NTS

GENERAL TOLERANCES (UNLESS SPECIFIED)

ANGULAR TOL	±	°
4 PLACES	±	
3 PLACES	±	
2 PLACES	±	
1 PLACE	±	
X PLACES	±	

DRAFT WHERE APPLICABLE MUST REMAIN WITHIN DIMENSIONS

CURRENT REV DESC:

EC NO: 719890
DRWN: NARENC 2022/08/22
CHK'D: SMARUYAMA 2022/09/05
APPR: YNAITO 2022/09/05

INITIAL REVISION:
DRWN: MNABEI 2003/12/16
APPR: MSASAO 2003/12/17

THIRD ANGLE PROJECTION | DRAWING: A3-SIZE | SERIES: 54132

molex

EMBOSSED TAPE PACKAGE
FOR 0.5 FPC CONN.ZIF -LEAD FREE-

PRODUCT CUSTOMER DRAWING

DOCUMENT NUMBER	DOC TYPE	DOC PART	REVISION
SD-54132-061	PSD	001	B

MATERIAL NUMBER	CUSTOMER	SHEET NUMBER
SEE TABLE	GENERAL MARKET	2 OF 2

DOCUMENT STATUS	P1	RELEASE DATE	2022/09/05 05:51:57

FORMAT: master-ib-prod-A3
REVISION: J1
DATE: 2021/05/01