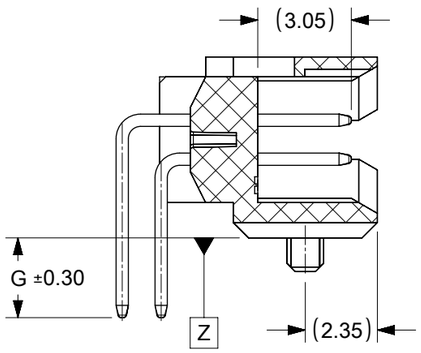


SECTION A-A

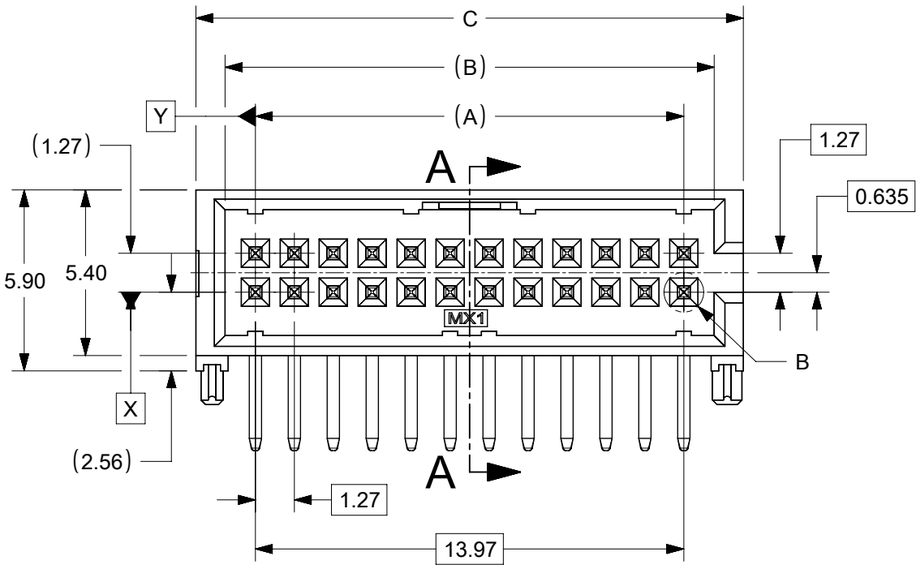


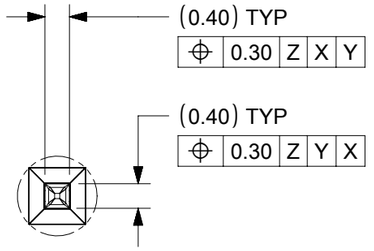


DETAIL B
SCALE 10:1

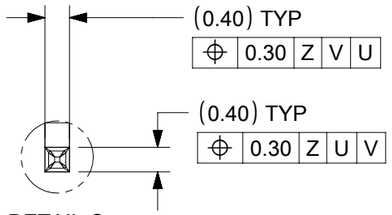


DETAIL C
SCALE 10:1

| CKT SIZE | DIMENSION | | | | | |
|---|---|---|---|---|---|---|
| | A | B | C | D | E | F |
| 4 | 1.27 | 3.25 | 5.15 | 4.10 | 3.05 | 3.04 |
| 6 | 2.54 | 4.52 | 6.42 | 5.37 | 4.32 | 4.31 |
| 8 | 3.81 | 5.79 | 7.69 | 6.64 | 5.59 | 5.58 |
| 10 | 5.08 | 7.06 | 8.96 | 7.91 | 6.86 | 6.85 |
| 12 | 6.35 | 8.33 | 10.23 | 9.18 | 8.13 | 8.12 |
| 14 | 7.62 | 9.60 | 11.50 | 10.45 | 9.40 | 9.39 |
| 16 | 8.89 | 10.87 | 12.77 | 11.72 | 10.67 | 10.66 |
| 18 | 10.16 | 12.14 | 14.04 | 12.99 | 11.94 | 11.93 |
| 20 | 11.43 | 13.41 | 15.31 | 14.26 | 13.21 | 13.20 |
| 22 | 12.70 | 14.68 | 16.58 | 15.53 | 14.48 | 14.47 |
| 24 | 13.97 | 15.95 | 17.85 | 16.80 | 15.75 | 15.74 |

| TAIL LENGTH DIMENSION G | RECOMMENDED BOARD THICKNESS (TOLERANCE) ± 0.10) |
|---|---|
| 1.60 | 1.60 |
| 2.40 | 2.40 |
| 3.00 | 3.00 |

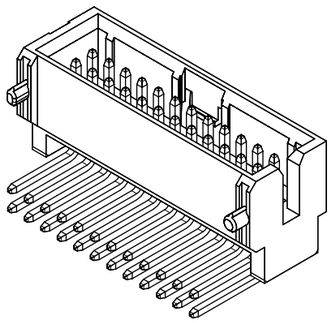

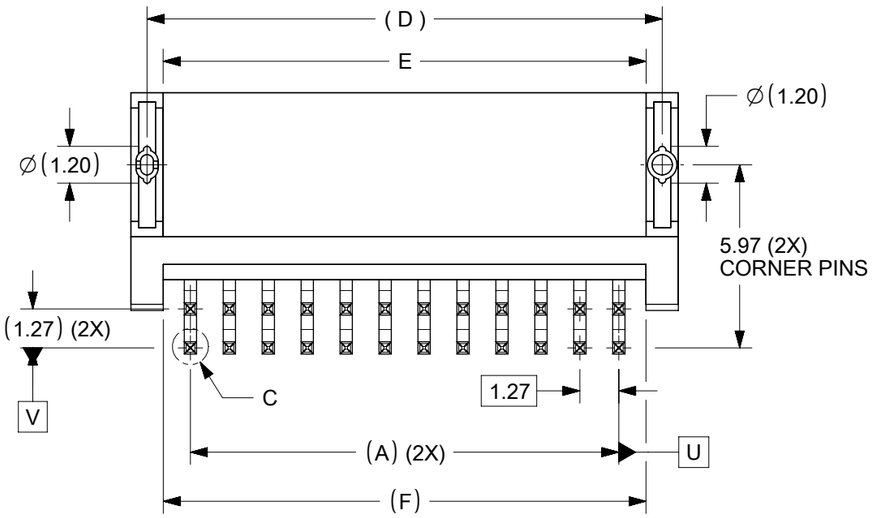


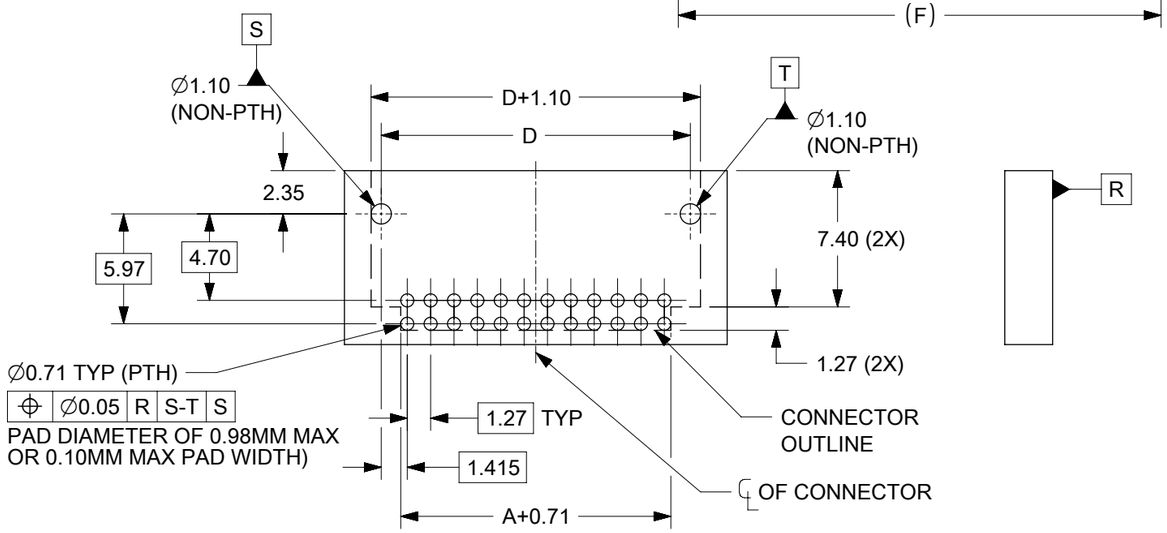


RECOMMENDED PCB LAYOUT
TOLERANCE ±0.05

NOTES:
1. FOR ILLUSTRATION PURPOSES, 24 CIRCUIT SIZE WAFER IS SHOWN.
2. MATERIAL :
   HOUSING : LCP, GLASS-FILLED, UL94V-0, BLACK
   BANDOLIER PIN : 0.40MM SQ. COPPER ALLOY
3. FINISHES: SEE SHEET 2
4. PRODUCT SPECIFICATION: 2009890001 (PS)
5. PACKAGING SPECIFICATION: 2010210001 (PK)
6. REFER TO SHEET 2 FOR PART OPTIONS AND PART NUMBER.
7. MATES WITH: 78120 SERIES
8. POSITIONING TO BE CONTROLLED BASED ON PIN TIP
9. PARTS CONFORMS TO CLASS "B" REQUIREMENT OF COSMETIC SPECIFICATION PS-45499-002
10. MOLEX LOGO AND CAVITY LOCATED AS SHOWN.
11. NON-FUNCTIONAL CORING IS SUBJECTED TO CHANGES WITHOUT NOTICE.

THIS DRAWING CONTAINS INFORMATION THAT IS PROPRIETARY TO MOLEX ELECTRONIC TECHNOLOGIES, LLC AND SHOULD NOT BE USED WITHOUT WRITTEN PERMISSION

| | |
|---|---|
| DIMENSION UNITS | mm |
| SCALE | NTS |
| GENERAL TOLERANCES (UNLESS SPECIFIED) | |
| ANGULAR TOL | ± 3.0 ° |
| 4 PLACES | ± |
| 3 PLACES | ± |
| 2 PLACES | ± 0.2 |
| 1 PLACE | ± |
| 0 PLACES | ± |
| DRAFT WHERE APPLICABLE MUST REMAIN WITHIN DIMENSIONS | |

CURRENT REV DESC: REMASTERED & BTB DISTANCE UPDATE

EC NO: 664214
DRWN: KSUTAR 2021/05/10
CHK'D: ABABUPS 2021/05/18
APPR: MRAMAKRISHNA 2021/05/18

INITIAL REVISION:
DRWN: SCHEONG 2016/02/22
APPR: KHLIM 2016/11/24

molex

1.27MM PITCH SLIM-GRID
RIGHT-ANGLE THROUGH HOLE SHROUDED HEADER

PRODUCT CUSTOMER DRAWING

| THIRD ANGLE PROJECTION | DRAWING | SERIES | MATERIAL NUMBER | CUSTOMER | SHEET NUMBER |
|---|---|---|---|---|---|
| | A3-SIZE | 201021 | SEE TABLE | GENERAL MARKET | 1 OF 4 |

| DOCUMENT NUMBER | DOC TYPE | DOC PART | REVISION |
|---|---|---|---|
| 2010210024 | PSD | 000 | A3 |

| DOCUMENT STATUS | P1 | RELEASE DATE | 2021/05/18 14:42:59 |
|---|---|---|---|

FORMAT: master_sheet-A3
REVISION: J
DATE: 2020/01/14

# LEGEND

201021 - X X X X

| CKT SIZE & PEG OPTION |
|---|
| (NO PEG)<br>04 = 4 CKTS<br>...<br>24 = 24 CKTS |
| (WITH PEG)<br>54 = 4 CKTS<br>...<br>74 = 24 CKTS |

| FINISHES |
|---|
| 0 = 0.05um Au MIN. GOLD ON CONTACT<br>AND 2.00um MIN. MATTE TIN ON SOLDERTAIL<br>OVER 1.27um MIN. NICKEL UNDERPLATE OVERALL<br>1 = 0.38um Au MIN. GOLD ON CONTACT<br>AND 2.00um MIN. MATTE TIN ON SOLDERTAIL<br>OVER 1.27um MIN. NICKEL UNDERPLATE OVERALL<br>2 = 0.76um Au MIN. GOLD ON CONTACT<br>AND 2.00um MIN. MATTE TIN ON SOLDERTAIL<br>OVER 1.27um MIN. NICKEL UNDERPLATE OVERALL |

| PACKAGING & KAPTON TAPE OPTION |
|---|
| TUBE & WITHOUT KAPTON TAPE<br>0 = 1.60 P.TAIL LENGTH<br>1 = 2.40 P.TAIL LENGTH<br>2 = 3.00 P.TAIL LENGTH |
| TUBE & WITH KAPTON TAPE<br>3 = 1.60 P.TAIL LENGTH<br>4 = 2.40 P.TAIL LENGTH<br>5 = 3.00 P.TAIL LENGTH |
| TAPE & REEL WITH KAPTON TAPE<br>(NOT TOOLED)<br>6 = 1.60 P.TAIL LENGTH<br>7 = 2.40 P.TAIL LENGTH<br>8 = 3.00 P.TAIL LENGTH |

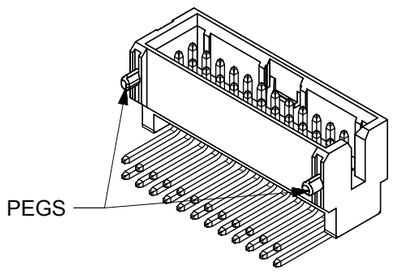


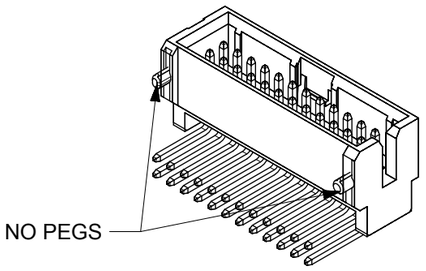


THIS DRAWING CONTAINS INFORMATION THAT IS PROPRIETARY TO MOLEX ELECTRONIC TECHNOLOGIES, LLC AND SHOULD NOT BE USED WITHOUT WRITTEN PERMISSION

| DIMENSION UNITS | SCALE |
|---|---|
| mm | NTS |

GENERAL TOLERANCES (UNLESS SPECIFIED)

| | |
|---|---|
| ANGULAR TOL | ± 3.0 ° |
| 4 PLACES | ± |
| 3 PLACES | ± |
| 2 PLACES | ± 0.2 |
| 1 PLACE | ± |
| 0 PLACES | ± |

DRAFT WHERE APPLICABLE MUST REMAIN WITHIN DIMENSIONS

CURRENT REV DESC: REMASTERED & BTB DISTANCE UPDATE

EC NO: 664214

| | | |
|---|---|---|
| DRWN: | KSUTAR | 2021/05/10 |
| CHK'D: | ABABUPS | 2021/05/18 |
| APPR: | MRAMAKRISHNA | 2021/05/18 |

INITIAL REVISION:

| | | |
|---|---|---|
| DRWN: | SCHEONG | 2016/02/22 |
| APPR: | KHLIM | 2016/11/24 |

molex

1.27MM PITCH SLIM-GRID
RIGHT-ANGLE THROUGH HOLE SHROUDED HEADER

PRODUCT CUSTOMER DRAWING

| DOCUMENT NUMBER | DOC TYPE | DOC PART | REVISION |
|---|---|---|---|
| 2010210024 | PSD | 000 | A3 |

| THIRD ANGLE PROJECTION | DRAWING | SERIES | MATERIAL NUMBER | CUSTOMER | SHEET NUMBER |
|---|---|---|---|---|---|
| | A3-SIZE | 201021 | SEE TABLE | GENERAL MARKET | 2 OF 4 |

| DOCUMENT STATUS | P1 | RELEASE DATE | 2021/05/18 14:42:59 |
|---|---|---|---|

FORMAT: master_sheet-A3
REVISION: J
DATE: 2020/01/14

| CKT SIZE | PIN TAIL LENGTH, G = 1.60 | | | | PIN TAIL LENGTH, G = 2.40 | | | | PIN TAIL LENGTH, G = 3.00 | | | |
|---|---|---|---|---|---|---|---|---|---|---|---|---|
| | ASSEMBLY NO PEG & NO KAPTON TAPE P/N | ASSEMBLY NO PEG & WITH KAPTON TAPE P/N | ASSEMBLY WITH PEG & NO KAPTON TAPE P/N | ASSEMBLY WITH PEG & WITH KAPTON TAPE P/N | ASSEMBLY NO PEG & NO KAPTON TAPE P/N | ASSEMBLY NO PEG & WITH KAPTON TAPE P/N | ASSEMBLY WITH PEG & NO KAPTON TAPE P/N | ASSEMBLY WITH PEG & WITH KAPTON TAPE P/N | ASSEMBLY NO PEG & NO KAPTON TAPE P/N | ASSEMBLY NO PEG & WITH KAPTON TAPE P/N | ASSEMBLY WITH PEG & NO KAPTON TAPE P/N | ASSEMBLY WITH PEG & WITH KAPTON TAPE P/N |
| 4 | 201021-0004 | 201021-3004 | 201021-0054 | 201021-3054 | 201021-1004 | 201021-4004 | 201021-1054 | 201021-4054 | 201021-2004 | 201021-5004 | 201021-2054 | 201021-5054 |
| | 201021-0104 | 201021-3104 | 201021-0154 | 201021-3154 | 201021-1104 | 201021-4104 | 201021-1154 | 201021-4154 | 201021-2104 | 201021-5104 | 201021-2154 | 201021-5154 |
| | 201021-0204 | 201021-3204 | 201021-0254 | 201021-3254 | 201021-1204 | 201021-4204 | 201021-1254 | 201021-4254 | 201021-2204 | 201021-5204 | 201021-2254 | 201021-5254 |
| 6 | 201021-0006 | 201021-3006 | 201021-0056 | 201021-3056 | 201021-1006 | 201021-4006 | 201021-1056 | 201021-4056 | 201021-2006 | 201021-5006 | 201021-2056 | 201021-5056 |
| | 201021-0106 | 201021-3106 | 201021-0156 | 201021-3156 | 201021-1106 | 201021-4106 | 201021-1156 | 201021-4156 | 201021-2106 | 201021-5106 | 201021-2156 | 201021-5156 |
| | 201021-0206 | 201021-3206 | 201021-0256 | 201021-3256 | 201021-1206 | 201021-4206 | 201021-1256 | 201021-4256 | 201021-2206 | 201021-5206 | 201021-2256 | 201021-5256 |
| 8 | 201021-0008 | 201021-3008 | 201021-0058 | 201021-3058 | 201021-1008 | 201021-4008 | 201021-1058 | 201021-4058 | 201021-2008 | 201021-5008 | 201021-2058 | 201021-5058 |
| | 201021-0108 | 201021-3108 | 201021-0158 | 201021-3158 | 201021-1108 | 201021-4108 | 201021-1158 | 201021-4158 | 201021-2108 | 201021-5108 | 201021-2158 | 201021-5158 |
| | 201021-0208 | 201021-3208 | 201021-0258 | 201021-3258 | 201021-1208 | 201021-4208 | 201021-1258 | 201021-4258 | 201021-2208 | 201021-5208 | 201021-2258 | 201021-5258 |
| 10 | 201021-0010 | 201021-3010 | 201021-0060 | 201021-3060 | 201021-1010 | 201021-4010 | 201021-1060 | 201021-4060 | 201021-2010 | 201021-5010 | 201021-2060 | 201021-5060 |
| | 201021-0110 | 201021-3110 | 201021-0160 | 201021-3160 | 201021-1110 | 201021-4110 | 201021-1160 | 201021-4160 | 201021-2110 | 201021-5110 | 201021-2160 | 201021-5160 |
| | 201021-0210 | 201021-3210 | 201021-0260 | 201021-3260 | 201021-1210 | 201021-4210 | 201021-1260 | 201021-4260 | 201021-2210 | 201021-5210 | 201021-2260 | 201021-5260 |
| 12 | 201021-0012 | 201021-3012 | 201021-0062 | 201021-3062 | 201021-1012 | 201021-4012 | 201021-1062 | 201021-4062 | 201021-2012 | 201021-5012 | 201021-2062 | 201021-5062 |
| | 201021-0112 | 201021-3112 | 201021-0162 | 201021-3162 | 201021-1112 | 201021-4112 | 201021-1162 | 201021-4162 | 201021-2112 | 201021-5112 | 201021-2162 | 201021-5162 |
| | 201021-0212 | 201021-3212 | 201021-0262 | 201021-3262 | 201021-1212 | 201021-4212 | 201021-1262 | 201021-4262 | 201021-2212 | 201021-5212 | 201021-2262 | 201021-5262 |
| 14 | 201021-0014 | 201021-3014 | 201021-0064 | 201021-3064 | 201021-1014 | 201021-4014 | 201021-1064 | 201021-4064 | 201021-2014 | 201021-5014 | 201021-2064 | 201021-5064 |
| | 201021-0114 | 201021-3114 | 201021-0164 | 201021-3164 | 201021-1114 | 201021-4114 | 201021-1164 | 201021-4164 | 201021-2114 | 201021-5114 | 201021-2164 | 201021-5164 |
| | 201021-0214 | 201021-3214 | 201021-0264 | 201021-3264 | 201021-1214 | 201021-4214 | 201021-1264 | 201021-4264 | 201021-2214 | 201021-5214 | 201021-2264 | 201021-5264 |
| 16 | 201021-0016 | 201021-3016 | 201021-0066 | 201021-3066 | 201021-1016 | 201021-4016 | 201021-1066 | 201021-4066 | 201021-2016 | 201021-5016 | 201021-2066 | 201021-5066 |
| | 201021-0116 | 201021-3116 | 201021-0166 | 201021-3166 | 201021-1116 | 201021-4116 | 201021-1166 | 201021-4166 | 201021-2116 | 201021-5116 | 201021-2166 | 201021-5166 |
| | 201021-0216 | 201021-3216 | 201021-0266 | 201021-3266 | 201021-1216 | 201021-4216 | 201021-1266 | 201021-4266 | 201021-2216 | 201021-5216 | 201021-2266 | 201021-5266 |
| 18 | 201021-0018 | 201021-3018 | 201021-0068 | 201021-3068 | 201021-1018 | 201021-4018 | 201021-1068 | 201021-4068 | 201021-2018 | 201021-5018 | 201021-2068 | 201021-5068 |
| | 201021-0118 | 201021-3118 | 201021-0168 | 201021-3168 | 201021-1118 | 201021-4118 | 201021-1168 | 201021-4168 | 201021-2118 | 201021-5118 | 201021-2168 | 201021-5168 |
| | 201021-0218 | 201021-3218 | 201021-0268 | 201021-3268 | 201021-1218 | 201021-4218 | 201021-1268 | 201021-4268 | 201021-2218 | 201021-5218 | 201021-2268 | 201021-5268 |
| 20 | 201021-0020 | 201021-3020 | 201021-0070 | 201021-3070 | 201021-1020 | 201021-4020 | 201021-1070 | 201021-4070 | 201021-2020 | 201021-5020 | 201021-2070 | 201021-5070 |
| | 201021-0120 | 201021-3120 | 201021-0170 | 201021-3170 | 201021-1120 | 201021-4120 | 201021-1170 | 201021-4170 | 201021-2120 | 201021-5120 | 201021-2170 | 201021-5170 |
| | 201021-0220 | 201021-3220 | 201021-0270 | 201021-3270 | 201021-1220 | 201021-4220 | 201021-1270 | 201021-4270 | 201021-2220 | 201021-5220 | 201021-2270 | 201021-5270 |
| 22 | 201021-0022 | 201021-3022 | 201021-0072 | 201021-3072 | 201021-1022 | 201021-4022 | 201021-1072 | 201021-4072 | 201021-2022 | 201021-5022 | 201021-2072 | 201021-5072 |
| | 201021-0122 | 201021-3122 | 201021-0172 | 201021-3172 | 201021-1122 | 201021-4122 | 201021-1172 | 201021-4172 | 201021-2122 | 201021-5122 | 201021-2172 | 201021-5172 |
| | 201021-0222 | 201021-3222 | 201021-0272 | 201021-3272 | 201021-1222 | 201021-4222 | 201021-1272 | 201021-4272 | 201021-2222 | 201021-5222 | 201021-2272 | 201021-5272 |
| 24 | 201021-0024 | 201021-3024 | 201021-0074 | 201021-3074 | 201021-1024 | 201021-4024 | 201021-1074 | 201021-4074 | 201021-2024 | 201021-5024 | 201021-2074 | 201021-5074 |
| | 201021-0124 | 201021-3124 | 201021-0174 | 201021-3174 | 201021-1124 | 201021-4124 | 201021-1174 | 201021-4174 | 201021-2124 | 201021-5124 | 201021-2174 | 201021-5174 |
| | 201021-0224 | 201021-3224 | 201021-0274 | 201021-3274 | 201021-1224 | 201021-4224 | 201021-1274 | 201021-4274 | 201021-2224 | 201021-5224 | 201021-2274 | 201021-5274 |

THIS DRAWING CONTAINS INFORMATION THAT IS PROPRIETARY TO MOLEX ELECTRONIC TECHNOLOGIES, LLC AND SHOULD NOT BE USED WITHOUT WRITTEN PERMISSION

| | |
|---|---|
| DIMENSION UNITS | mm |
| SCALE | NTS |
| GENERAL TOLERANCES (UNLESS SPECIFIED) | |
| ANGULAR TOL ± | 3.0 ° |
| 4 PLACES ± | |
| 3 PLACES ± | |
| 2 PLACES ± | 0.2 |
| 1 PLACE ± | |
| 0 PLACES ± | |
| DRAFT WHERE APPLICABLE MUST REMAIN WITHIN DIMENSIONS | |

CURRENT REV DESC: REMASTERED & BTB DISTANCE UPDATE

EC NO: 664214
DRWN: KSUTAR 2021/05/10
CHK'D: ABABUPS 2021/05/18
APPR: MRAMAKRISHNA 2021/05/18

INITIAL REVISION:
DRWN: SCHEONG 2016/02/22
APPR: KHLIM 2016/11/24

molex

1.27MM PITCH SLIM-GRID
RIGHT-ANGLE THROUGH HOLE SHROUDED HEADER

PRODUCT CUSTOMER DRAWING

| DOCUMENT NUMBER | DOC TYPE | DOC PART | REVISION |
|---|---|---|---|
| 2010210024 | PSD | 000 | A3 |

| THIRD ANGLE PROJECTION | DRAWING | SERIES | MATERIAL NUMBER | CUSTOMER | SHEET NUMBER |
|---|---|---|---|---|---|
| | A3-SIZE | 201021 | SEE TABLE | GENERAL MARKET | 3 OF 4 |

| DOCUMENT STATUS | P1 | RELEASE DATE | 2021/05/18 14:42:59 |
|---|---|---|---|

FORMAT: master_dwg_A3
REVISION: J1
DATE: 2020/01/16

BOARD TO BOARD (BTB) DISTANCE

| HEADER | MATES WITH (RECEPTACLE) | BTB DIST. | PICTORIAL VIEW |
|---|---|---|---|
| 201021 | 78120 | 9.23 | 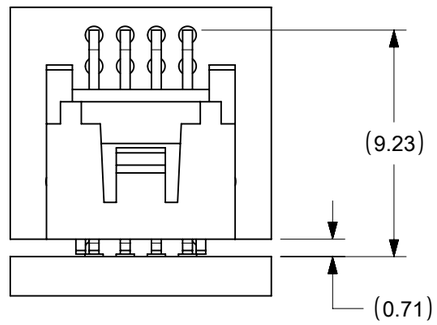 |



THIS DRAWING CONTAINS INFORMATION THAT IS PROPRIETARY TO MOLEX ELECTRONIC TECHNOLOGIES, LLC AND SHOULD NOT BE USED WITHOUT WRITTEN PERMISSION

| DIMENSION UNITS | SCALE |
|---|---|
| mm | NTS |

GENERAL TOLERANCES (UNLESS SPECIFIED)

| | |
|---|---|
| ANGULAR TOL | ± 3.0 ° |
| 4 PLACES | ± |
| 3 PLACES | ± |
| 2 PLACES | ± 0.2 |
| 1 PLACE | ± |
| 0 PLACES | ± |

DRAFT WHERE APPLICABLE MUST REMAIN WITHIN DIMENSIONS

CURRENT REV DESC: REMASTERED & BTB DISTANCE UPDATE

EC NO: 664214

| | | |
|---|---|---|
| DRWN: | KSUTAR | 2021/05/10 |
| CHK'D: | ABABUPS | 2021/05/18 |
| APPR: | MRAMAKRISHNA | 2021/05/18 |

INITIAL REVISION:

| | | |
|---|---|---|
| DRWN: | SCHEONG | 2016/02/22 |
| APPR: | KHLIM | 2016/11/24 |

molex

1.27MM PITCH SLIM-GRID
RIGHT-ANGLE THROUGH HOLE SHROUDED HEADER

PRODUCT CUSTOMER DRAWING

| DOCUMENT NUMBER | DOC TYPE | DOC PART | REVISION |
|---|---|---|---|
| 2010210024 | PSD | 000 | A3 |

| THIRD ANGLE PROJECTION | DRAWING | SERIES | MATERIAL NUMBER | CUSTOMER | SHEET NUMBER |
|---|---|---|---|---|---|
| | A3-SIZE | 201021 | SEE TABLE | GENERAL MARKET | 4 OF 4 |

| DOCUMENT STATUS | P1 | RELEASE DATE | 2021/05/18 14:42:59 |
|---|---|---|---|

FORMAT: master_Sheet-A3
REVISION: J
DATE: 2020/01/1