OPTION "A"

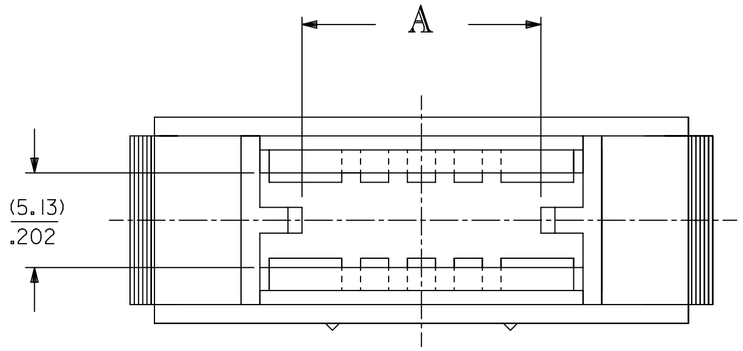

NOTES:
1) MATERIAL: POLYESTER 94V-0, GLASS FILLED, COLOR: BLACK
2) SEE CHART FOR CIRCUIT SIZES.
3) HOUSING TO BE USED WITH 70475 SERIES HOUSINGS (OPTION D) AND DUAL ROW INTERIM CLIP 70013-N*. SEE PAGE 2 FOR ADDITIONAL 50 CIRCUIT, OPTION "A" MATING INTERIM CLIPS.
4) PANEL THICKNESS (0.81)/.032 - (2.36)/.093.
5) PACKAGE PER PK-70022-100.

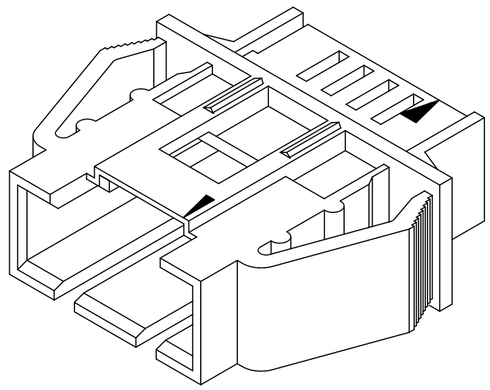

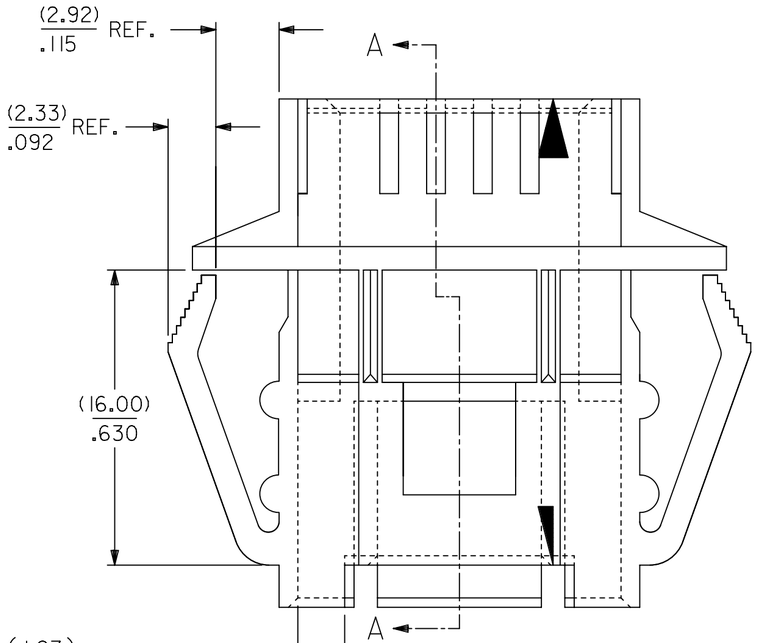

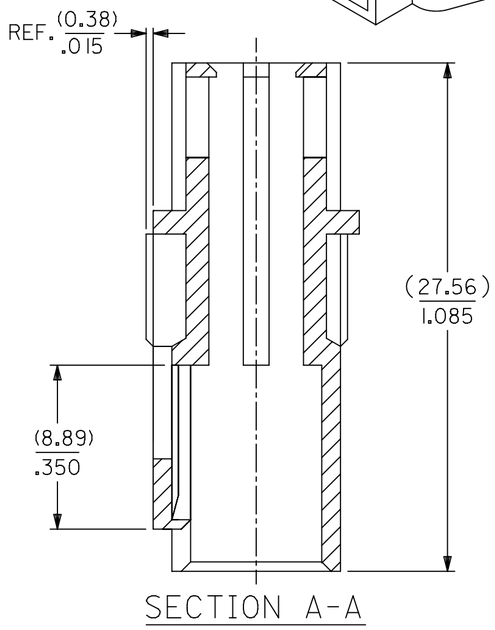

SECTION A-A

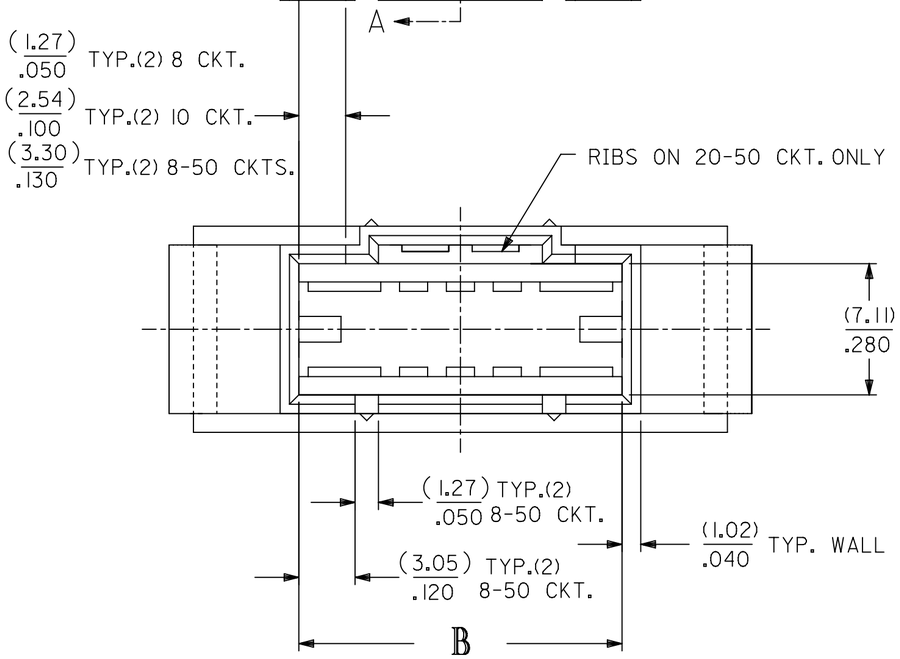

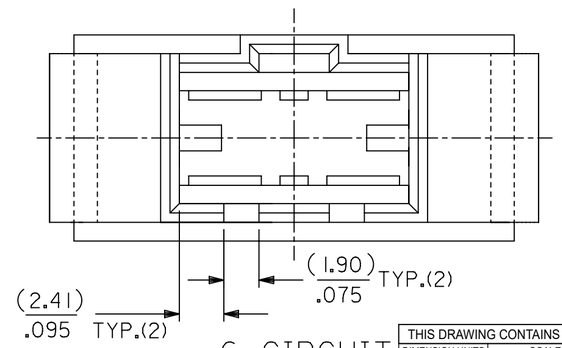

6 CIRCUIT

OPTION "A"				
CKT. SIZE	EDP. NO.	ENG. NO.	DIM. "A"	DIM. "B"
4	NOT TOOLED	X-70022-0009	(5.21) .205	(9.91) .390
6	50-65-0006	70022-0001	(7.75) .305	(12.45) .490
8	50-65-0008	70022-0007	(10.29) .405	(14.99) .590
10	50-65-0010	70022-0002	(12.83) .505	(17.53) .690
12	50-65-0012	70022-0012	(15.37) .605	(20.07) .790
14	50-65-0014	70022-0014	(17.91) .705	(22.61) .890
16	50-65-0016	70022-0016	(20.45) .805	(25.15) .990
18	50-65-0018	70022-0018	(22.99) .905	(27.69) 1.090
20	50-65-0020	70022-0003	(25.53) 1.005	(30.23) 1.190
24	50-65-0024	70022-0024	(30.61) 1.205	(35.31) 1.390
26	50-65-0026	70022-0026	(33.15) 1.305	(37.85) 1.490
28	50-65-0028	70022-0028	(35.69) 1.405	(40.39) 1.590
30	50-65-0030	70022-0004	(38.23) 1.505	(42.93) 1.690
32	50-65-0032	70022-0032	(40.77) 1.605	(45.47) 1.790
34	50-65-0034	70022-0034	(43.31) 1.705	(48.01) 1.890
36	50-65-0036	70022-0036	(45.85) 1.805	(50.55) 1.990
38	50-65-0038	70022-0038	(48.39) 1.905	(53.09) 2.090
40	50-65-0040	70022-0005	(50.93) 2.005	(55.63) 2.190
42	50-65-0042	70022-0042	(53.47) 2.105	(58.17) 2.290
44	50-65-0051	70022-0044	(56.01) 2.205	(60.71) 2.390
46	50-65-0046	70022-0046	(58.55) 2.305	(63.25) 2.490
48	50-65-0048	70022-0048	(61.09) 2.405	(65.79) 2.590
50	50-65-0050	70022-0006	(63.63) 2.505	(68.33) 2.690

THIS DRAWING CONTAINS INFORMATION THAT IS PROPRIETARY TO MOLEX ELECTRONIC TECHNOLOGIES, LLC AND SHOULD NOT BE USED WITHOUT WRITTEN PERMISSION

DIMENSION UNITS	SCALE
MM/IN	4:1

GENERAL TOLERANCES (UNLESS SPECIFIED)

	MM	INCH
4 PLACES	±	±
3 PLACES	±	± 0.01
2 PLACES	± 0.25	± 0.014
1 PLACE	± 0.35	±
0 PLACES	±	±
ANGULAR TOL	± 0.5 °	

DRAFT WHERE APPLICABLE MUST REMAIN WITHIN DIMENSIONS

CURRENT REV DESC: REMOVED OBSOLETED PART NUMBERS AS PER PCN#516685

EC NO: 830097
DRWN: SANATK1 2025/08/02
CHK'D: GGA 2025/08/06
APPR: GGA 2025/08/06

INITIAL REVISION:
DRWN: DJK ---
APPR: MJM ---

THIRD ANGLE PROJECTION | DRAWING: C-SIZE | SERIES: 70022

molex

HOUSING, PANEL MOUNT (DUAL ROW)
(OPT. D HSG. TO DUAL ROW CLIP)

PRODUCT CUSTOMER DRAWING

DOCUMENT NUMBER	DOC TYPE	DOC PART	REVISION
SD-70022-XXXX	PSD	001	R

MATERIAL NUMBER	CUSTOMER	SHEET NUMBER
SEE CHART	GENERAL MARKET	1 OF 3

DOCUMENT STATUS	P1	RELEASE DATE	2025/08/06 10:03:59

FORMAT: Eng-lega-master-Bi-prod-C
REVISION: E
DATE: 2021/05/01

OPTION "A"
50 CIRCUIT ONLY

CKT. SIZE	OPTION "A" EDP. NO.	OPTION "A" ENG. NO.	MATES WITH EDP. NO.	MATES WITH ENG. NO.	DIM. "P"	DIM. "Q"
50	050-65-0501	70022-0061	015-04-5500	70013-1051	(3.05±0.08) .120±.003	(6.68±0.08) .270±.003
50	050-65-0502	70022-0062	015-04-5502	70013-1052	(3.05±0.08) .120±.003	(10.67±0.08) .420±.003
50	050-65-0503	70022-0063	015-04-5503	70013-1053	(6.68±0.08) .270±.003	(3.05±0.08) .120±.003
50	050-65-0504	70022-0064	015-04-5505	70013-1054	(6.68±0.08) .270±.003	(6.68±0.08) .270±.003
50	050-65-0505	70022-0065	015-04-5506	70013-1055	(6.68±0.08) .270±.003	(10.67±0.08) .420±.003
50	050-65-0506	70022-0066	015-04-5507	70013-1056	(10.67±0.08) .420±.003	(3.05±0.08) .120±.003
50	050-65-0507	70022-0067	015-04-5508	70013-1057	(10.67±0.08) .420±.003	(6.68±0.08) .270±.003
50	050-65-0508	70022-0068	015-04-5509	70013-1058	(10.67±0.08) .420±.003	(10.67±0.08) .420±.003

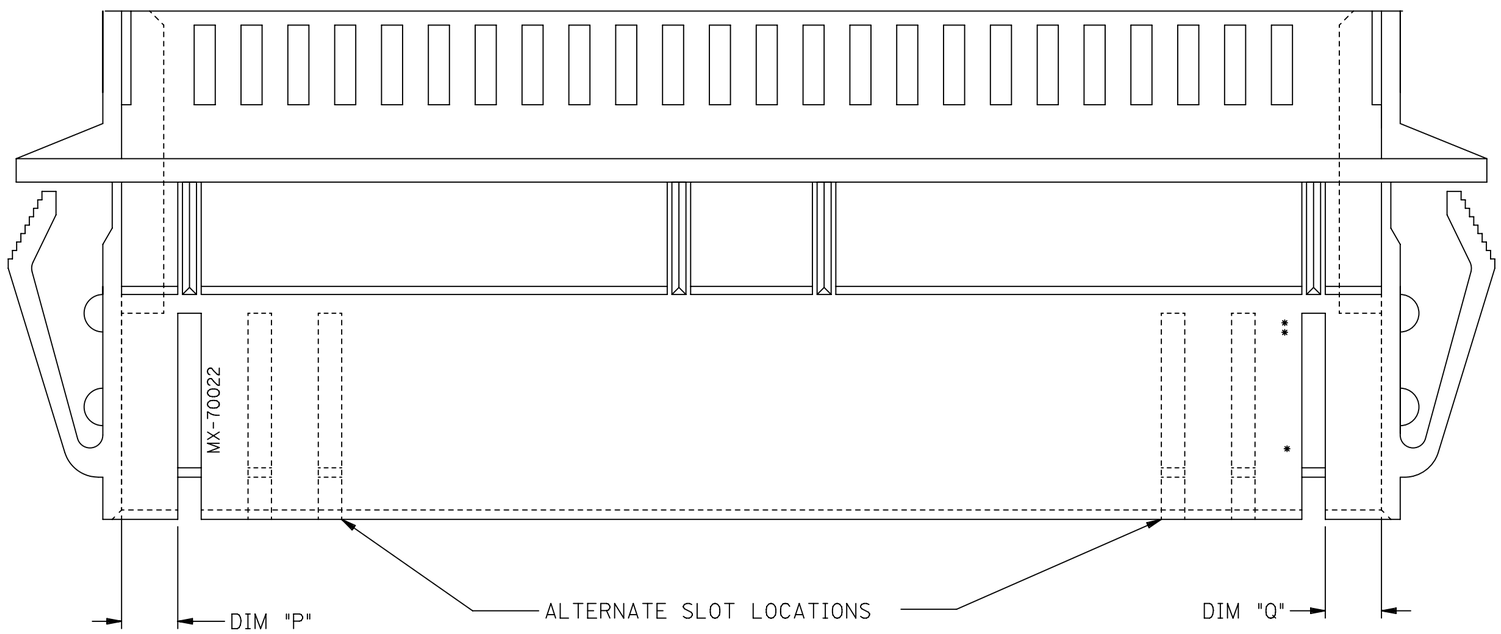

LTR.	REVISIONS	LTR.	REVISIONS
		O	ADD PKG NOTE PER UDT2000-0468 SCHAFER 99/12/1
R	REMOVED OBSOLETE PART NUMBERS AS PER PCN#516685	N1	ADDED SHEET 4 50 CKT KEYING OPT ENC. U80986 11/17/97 HPA
Q	ADD EJECTOR BUMPS UCP2004-1610 RWHITE 04/02/23	N	REVISED PER ECN# U10463 1-11-91 MGB
P	VOID OPTION B ECN UDT2001-0578 SCHAFER 00/12/5	M	RELPACES SD-70022-0001-0048 PER ECR# U00500 06-28-90 MJM/DJK

THIS DRAWING CONTAINS INFORMATION THAT IS PROPRIETARY TO MOLEX ELECTRONIC TECHNOLOGIES, LLC AND SHOULD NOT BE USED WITHOUT WRITTEN PERMISSION

DIMENSION UNITS: MM/IN | SCALE: 4:1

GENERAL TOLERANCES (UNLESS SPECIFIED)

	MM	INCH
4 PLACES	±	±
3 PLACES	±	± 0.01
2 PLACES	± 0.25	± 0.014
1 PLACE	± 0.35	±
0 PLACES	±	±
ANGULAR TOL	± 0.5 °	

DRAFT WHERE APPLICABLE MUST REMAIN WITHIN DIMENSIONS

CURRENT REV DESC: REMOVED OBSOLETED PART NUMBERS AS PER PCN#516685

EC NO: 830097
DRWN: SANATK1 2025/08/02
CHK'D: GGA 2025/08/06
APPR: GGA 2025/08/06

INITIAL REVISION:
DRWN: DJK ---
APPR: MJM ---

THIRD ANGLE PROJECTION | DRAWING: C-SIZE | SERIES: 70022

molex

HOUSING, PANEL MOUNT (DUAL ROW)
(OPT. D HSG. TO DUAL ROW CLIP)

PRODUCT CUSTOMER DRAWING

DOCUMENT NUMBER	DOC TYPE	DOC PART	REVISION
SD-70022-XXXX	PSD	001	R

MATERIAL NUMBER	CUSTOMER	SHEET NUMBER
SEE CHART	GENERAL MARKET	2 OF 3

DOCUMENT STATUS	P1	RELEASE DATE	2025/08/06 10:03:59

FORMAT: Eng-lega-master-lb-prod-C
REVISION: E1
DATE: 2021/05/01

CKT. SIZE	DIM. "C" ±(0.13)/.005	DIM. "D" ±(0.13)/.005
4	(18.16) .715	(8.64) .340
6	(20.70) .815	(8.64) .340
8	(23.24) .915	(8.89) .350
10	(25.78) 1.015	(11.43) .450
12	(28.32) 1.115	(13.97) .550
14	(30.86) 1.215	(16.51) .650
16	(33.40) 1.315	(19.05) .750
18	(35.94) 1.415	(21.59) .850
20	(38.48) 1.515	(24.13) .950
22	(41.02) 1.615	(26.67) 1.050
24	(43.56) 1.715	(29.21) 1.150
26	(46.10) 1.815	(31.75) 1.250
28	(48.64) 1.915	(34.29) 1.350
30	(51.18) 2.015	(36.83) 1.450
32	(53.72) 2.115	(39.37) 1.550
34	(56.26) 2.215	(41.91) 1.650
36	(58.80) 2.315	(44.45) 1.750
38	(61.34) 2.415	(46.99) 1.850
40	(63.88) 2.515	(49.53) 1.950
42	(66.42) 2.615	(52.07) 2.050
44	(68.96) 2.715	(54.61) 2.150
46	(71.50) 2.815	(57.15) 2.250
48	(74.04) 2.915	(59.69) 2.350
50	(76.58) 3.015	(62.23) 2.450

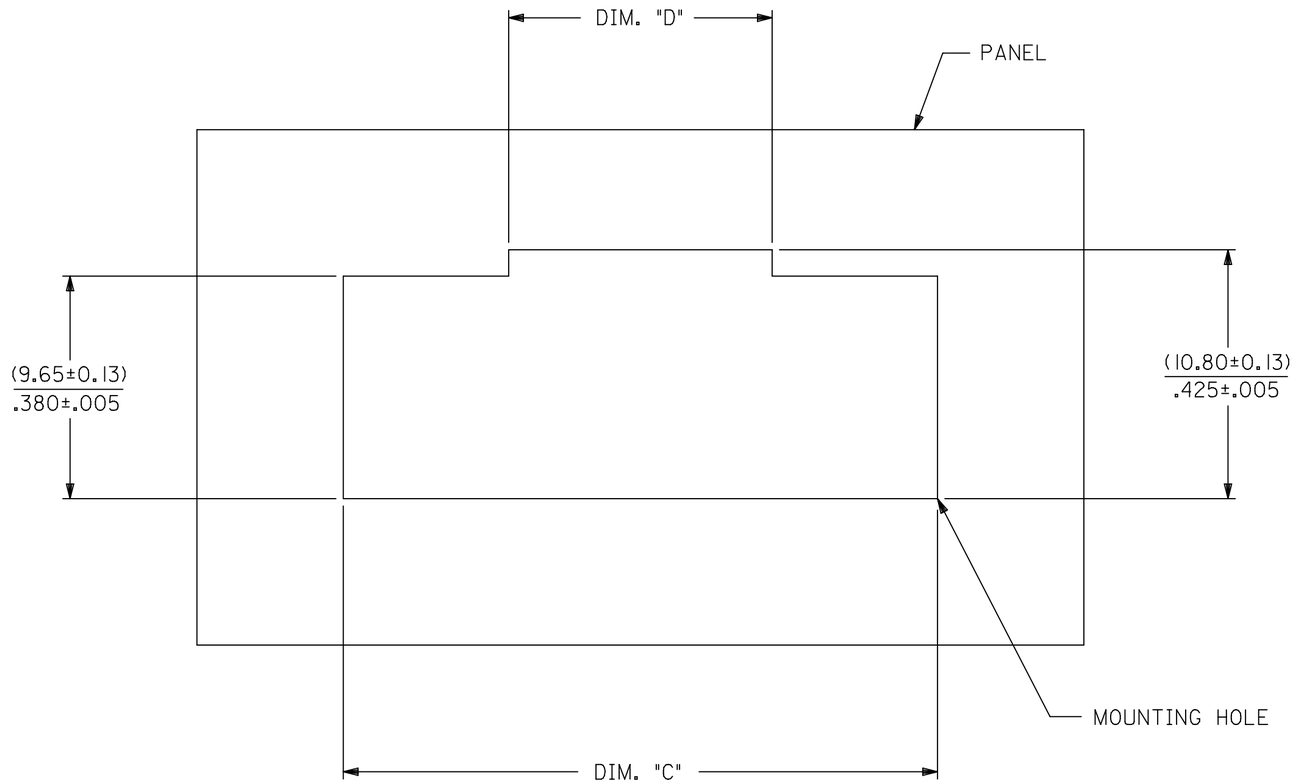

OPTION "A"
RECOMMENDED MOUNTING
HOLE LAYOUT

THIS DRAWING CONTAINS INFORMATION THAT IS PROPRIETARY TO MOLEX ELECTRONIC TECHNOLOGIES, LLC AND SHOULD NOT BE USED WITHOUT WRITTEN PERMISSION

DIMENSION UNITS	SCALE
MM/IN	1:1

GENERAL TOLERANCES (UNLESS SPECIFIED)

	MM	INCH
4 PLACES	±	±
3 PLACES	±	± 0.01
2 PLACES	± 0.25	± 0.014
1 PLACE	± 0.35	±
0 PLACES	±	±
ANGULAR TOL	± 0.5 °	

DRAFT WHERE APPLICABLE MUST REMAIN WITHIN DIMENSIONS

CURRENT REV DESC: REMOVED OBSOLETED PART NUMBERS AS PER PCN#516685

EC NO: 830097
DRWN: SANATK1 2025/08/02
CHK'D: GGA 2025/08/06
APPR: GGA 2025/08/06

INITIAL REVISION:
DRWN: DJK ---
APPR: MJM ---

THIRD ANGLE PROJECTION | DRAWING: C-SIZE | SERIES: 70022

molex

HOUSING, PANEL MOUNT (DUAL ROW)
(OPT. D HSG. TO DUAL ROW CLIP)

PRODUCT CUSTOMER DRAWING

DOCUMENT NUMBER	DOC TYPE	DOC PART	REVISION
SD-70022-XXXX	PSD	001	R

MATERIAL NUMBER	CUSTOMER	SHEET NUMBER
SEE CHART	GENERAL MARKET	3 OF 3

DOCUMENT STATUS	P1	RELEASE DATE	2025/08/06 10:03:59

FORMAT: Eng-lega-master-tb-prod-C
REVISION: E1
DATE: 2021/05/01