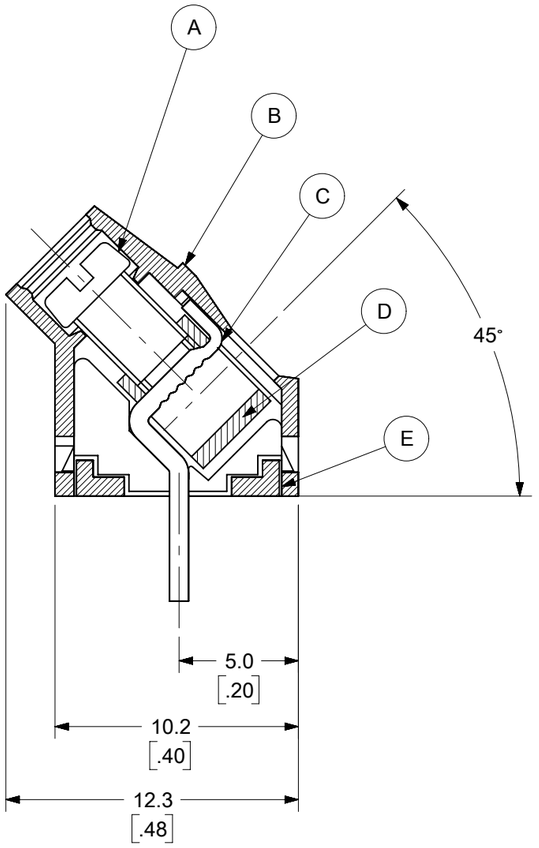

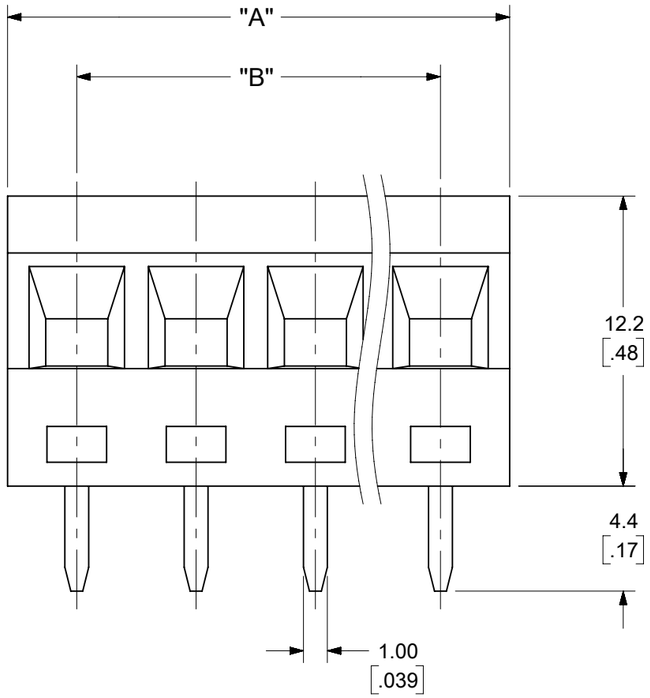

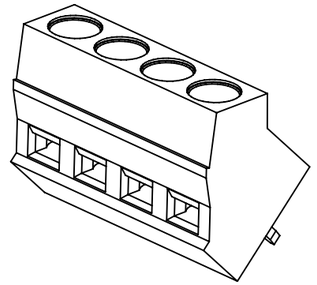

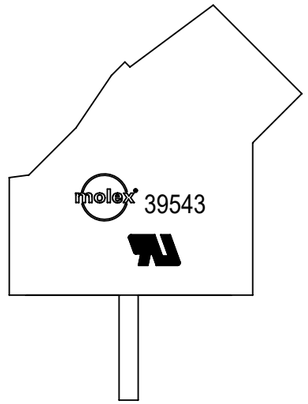

A3

SPECIFICATIONS:

1. MATERIAL:
   (A). SCREW: ZINC PLATED STEEL
   (B). BODY: PA66, UL94-V0, FOR COLOR SEE SHEET 2
   (C). TERMINAL: BRASS, TIN PLATED
   (D). CAGE: BRASS, NICKEL PLATED
   (E). COVER: PA66, UL94-V0, FOR COLOR SEE SHEET 2
2. WIRE RANGE: 14 to 22 AWG
3. ELECTRICAL RATING: 300V MAX., 15A MAX.
4. MAX TORQUE: 3 IN-LBS.
5. WIRE STRIP LENGTH: 5.00mm.
6. DIELECTRIC WITHSTAND: AC 2000V FOR 1 MINUTE.
7. BREAKDOWN VOLTAGE : 4000V.(1.2/50us), 5 TIMES.
8. INSULATION RESISTANCE: DC 500V, 1000M.
9. OPERATING TEMPERATURE: -40°C to +115°C.

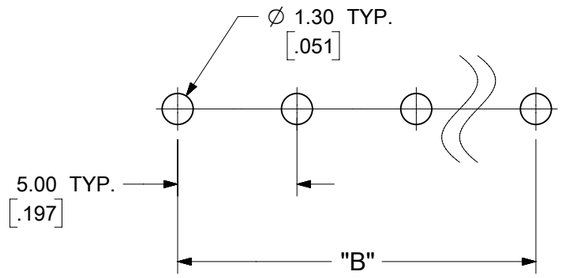

PCB LAYOUT

TOLERANCES			
MM	TOL	INCH	TOL
0-6	±0.25	0-.24	±.010
>6-30	±0.40	.24-1.18	±.016
>30-120	±0.50	1.18-4.76	±.020
>120	±0.80	>4.76	±.031

DOCUMENT STATUS	P1	RELEASE DATE	2021/10/04 17:32:50		

FORMAT: Eng-lega-master-tb-prod-B
REVISION: E1
DATE: 2021/05/01

FUNCTIONAL SYMBOLS: EA = 0; EC = 0; EP = 0
DIVISIONAL SYMBOLS

THIS DRAWING CONTAINS INFORMATION THAT IS PROPRIETARY TO MOLEX ELECTRONIC TECHNOLOGIES, LLC AND SHOULD NOT BE USED WITHOUT WRITTEN PERMISSION

DIMENSION UNITS: MM/INCH
SCALE: 4:1

GENERAL TOLERANCES (UNLESS SPECIFIED)

	MM	INCH
4 PLACES	± ---	± ---
3 PLACES	± ---	± SEE CHART
2 PLACES	± SEE CHART	± SEE CHART
1 PLACE	± SEE CHART	± ---
0 PLACES	± ---	± ---
ANGULAR TOL	± ---	

DRAFT WHERE APPLICABLE MUST REMAIN WITHIN DIMENSIONS

CURRENT REV DESC: MODIFIED SPECIFICATIONS

EC NO: 680084
DRWN: ABENJAMINLW 2021/10/01
CHK'D: DACHAMMER 2021/10/01
APPR: JFMURPHY 2021/10/04

INITIAL REVISION:
DRWN: LROTHAUS 2006/01/09
APPR: JPAWLICK 2006/01/10

THIRD ANGLE PROJECTION | DRAWING: B-SIZE | SERIES: 39543

molex

5.0MM, EURO TERM. BLOCK
PC MOUNT, 45 DEGREES

PRODUCT CUSTOMER DRAWING

DOCUMENT NUMBER	DOC TYPE	DOC PART	REVISION
SD-39543-002	PSD	001	A3

MATERIAL NUMBER	CUSTOMER	SHEET NUMBER
SEE SHEET 2	GENERAL MARKET	1 OF 2

DESCRIPTION	CIRCUIT SIZE	MATERIAL NUMBERS						DIMENSIONAL INFORMATION			
		BLACK			GREEN						
		100% TIN			100% TIN						
		PRINTING OPTIONS			PRINTING OPTIONS			DIM. "A"		DIM. "B"	
		None	10A	11A	None	10A	11A	mm	inch	mm	inch
5.0 MM, EURO BLOCK, PC MOUNT, 45 DEGREE	2	395434302	395436302	395438302	395934302	395936302	395938302	10.80	.425	5.00	.197
5.0 MM, EURO BLOCK, PC MOUNT, 45 DEGREE	3	395434303	395436303	395438303	395934303	395936303	395938303	15.80	.622	10.00	.394
5.0 MM, EURO BLOCK, PC MOUNT, 45 DEGREE	4	395434304	395436304	395438304	395934304	395936304	395938304	20.80	.819	15.00	.591
5.0 MM, EURO BLOCK, PC MOUNT, 45 DEGREE	5	395434305	395436305	395438305	395934305	395936305	395938305	25.80	1.016	20.00	.787
5.0 MM, EURO BLOCK, PC MOUNT, 45 DEGREE	6	395434306	395436306	395438306	395934306	395936306	395938306	30.80	1.213	25.00	.984
5.0 MM, EURO BLOCK, PC MOUNT, 45 DEGREE	7	395434307	395436307	395438307	395934307	395936307	395938307	35.80	1.409	30.00	1.181
5.0 MM, EURO BLOCK, PC MOUNT, 45 DEGREE	8	395434308	395436308	395438308	395934308	395936308	395938308	40.80	1.606	35.00	1.378
5.0 MM, EURO BLOCK, PC MOUNT, 45 DEGREE	9	395434309	395436309	395438309	395934309	395936309	395938309	45.80	1.803	40.00	1.575
5.0 MM, EURO BLOCK, PC MOUNT, 45 DEGREE	10	395434310	395436310	395438310	395934310	395936310	395938310	50.80	2.000	45.00	1.772
5.0 MM, EURO BLOCK, PC MOUNT, 45 DEGREE	11	395434311	395436311	395438311	395934311	395936311	395938311	55.80	2.197	50.00	1.969
5.0 MM, EURO BLOCK, PC MOUNT, 45 DEGREE	12	395434312	395436312	395438312	395934312	395936312	395938312	60.80	2.394	55.00	2.165
5.0 MM, EURO BLOCK, PC MOUNT, 45 DEGREE	13	395434313	395436313	395438313	395934313	395936313	395938313	65.80	2.591	60.00	2.362
5.0 MM, EURO BLOCK, PC MOUNT, 45 DEGREE	14	395434314	395436314	395438314	395934314	395936314	395938314	70.80	2.787	65.00	2.559
5.0 MM, EURO BLOCK, PC MOUNT, 45 DEGREE	15	395434315	395436315	395438315	395934315	395936315	395938315	75.80	2.984	70.00	2.756
5.0 MM, EURO BLOCK, PC MOUNT, 45 DEGREE	16	395434316	395436316	395438316	395934316	395936316	395938316	80.80	3.181	75.00	2.953
5.0 MM, EURO BLOCK, PC MOUNT, 45 DEGREE	17	395434317	395436317	395438317	395934317	395936317	395938317	85.80	3.378	80.00	3.150
5.0 MM, EURO BLOCK, PC MOUNT, 45 DEGREE	18	395434318	395436318	395438318	395934318	395936318	395938318	90.80	3.575	85.00	3.346
5.0 MM, EURO BLOCK, PC MOUNT, 45 DEGREE	19	395434319	395436319	395438319	395934319	395936319	395938319	95.80	3.772	90.00	3.543
5.0 MM, EURO BLOCK, PC MOUNT, 45 DEGREE	20	395434320	395436320	395438320	395934320	395936320	395938320	100.80	3.968	95.00	3.740
5.0 MM, EURO BLOCK, PC MOUNT, 45 DEGREE	21	395434321	395436321	395438321	395934321	395936321	395938321	105.80	4.165	100.00	3.937
5.0 MM, EURO BLOCK, PC MOUNT, 45 DEGREE	22	395434322	395436322	395438322	395934322	395936322	395938322	110.80	4.362	105.00	4.134
5.0 MM, EURO BLOCK, PC MOUNT, 45 DEGREE	23	395434323	395436323	395438323	395934323	395936323	395938323	115.80	4.559	110.00	4.331
5.0 MM, EURO BLOCK, PC MOUNT, 45 DEGREE	24	395434324	395436324	395438324	395934324	395936324	395938324	120.80	4.756	115.00	4.528

TOLERANCES			
MM	TOL	INCH	TOL
0-6	±0.25	0-.24	±.010
>6-30	±0.40	.24-1.18	±.016
>30-120	±0.50	1.18-4.76	±.020
>120	±0.80	>4.76	±.031

FUNCTIONAL SYMBOLS
(E/A) = 0
(E/C) = 0
(E/P) = 0
DIVISIONAL SYMBOLS

THIS DRAWING CONTAINS INFORMATION THAT IS PROPRIETARY TO MOLEX ELECTRONIC TECHNOLOGIES, LLC AND SHOULD NOT BE USED WITHOUT WRITTEN PERMISSION

DIMENSION UNITS: MM/INCH
SCALE: 2:1

GENERAL TOLERANCES (UNLESS SPECIFIED)

	MM	INCH
4 PLACES	± ---	± ---
3 PLACES	± ---	± SEE CHART
2 PLACES	± SEE CHART	± SEE CHART
1 PLACE	± SEE CHART	± ---
0 PLACES	± ---	± ---
ANGULAR TOL	± ---	

DRAFT WHERE APPLICABLE MUST REMAIN WITHIN DIMENSIONS

CURRENT REV DESC: MODIFIED SPECIFICATIONS

EC NO: 680084
DRWN: ABENJAMINLW 2021/10/01
CHK'D: DACHAMMER 2021/10/01
APPR: JFMURPHY 2021/10/04

INITIAL REVISION:
DRWN: LROTHAUS 2006/01/09
APPR: JPAWLICK 2006/01/10

THIRD ANGLE PROJECTION
DRAWING: B-SIZE
SERIES: 39543

molex

5.0MM, EURO TERM. BLOCK
PC MOUNT, 45 DEGREES

PRODUCT CUSTOMER DRAWING

DOCUMENT NUMBER	DOC TYPE	DOC PART	REVISION
SD-39543-002	PSD	001	A3

MATERIAL NUMBER	CUSTOMER	SHEET NUMBER
SEE CHART	GENERAL MARKET	2 OF 2

DOCUMENT STATUS	P1	RELEASE DATE	2021/10/04 17:32:50

FORMAT: Eng-lega-master-tb-prod-B
REVISION: E1
DATE: 2021/05/01