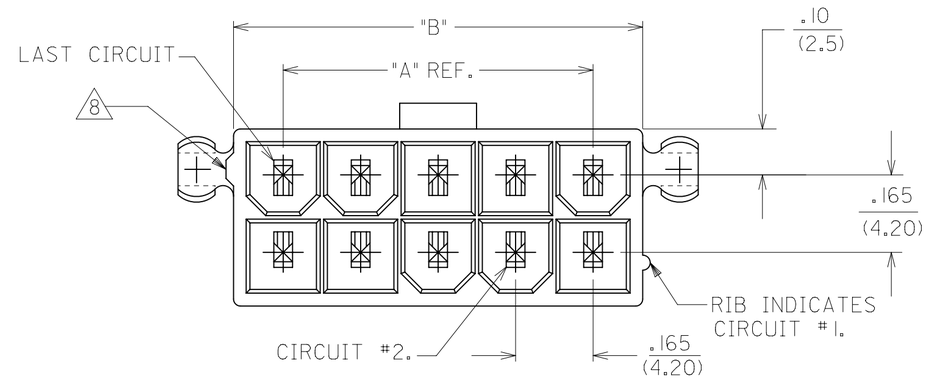

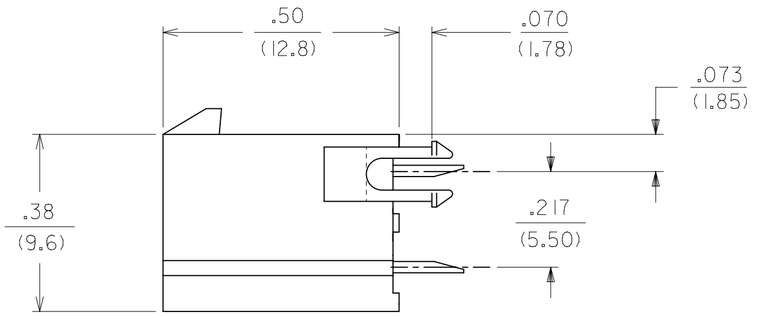

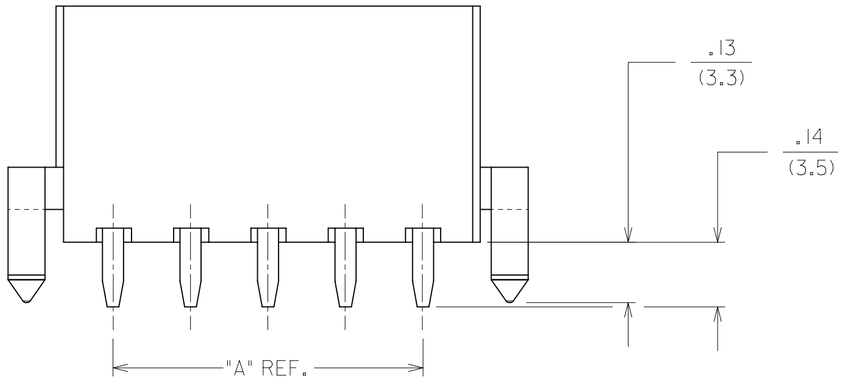

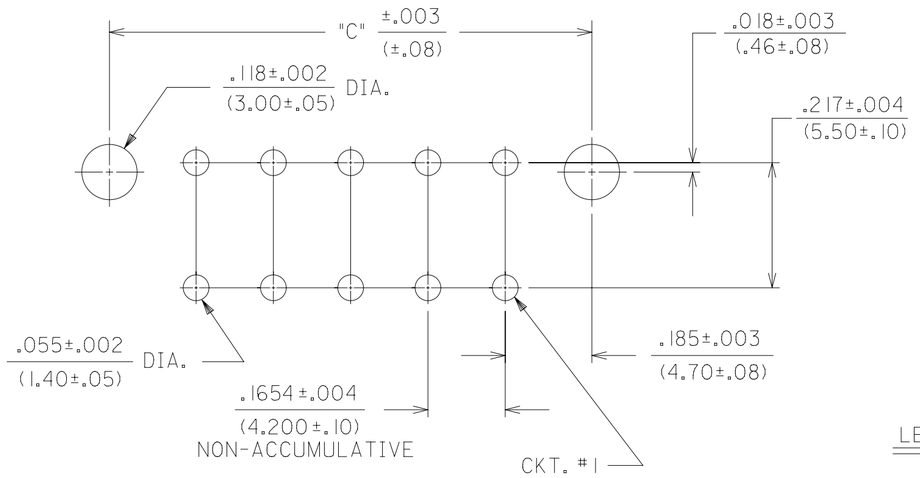

CIRCUIT SIZE	DIM. "A"	DIM. "B"	DIM. "C"
2	—	.21 (5.4)	.370 (9.40)
4	.17 (4.2)	.38 (9.6)	.535 (13.60)
6	.33 (8.4)	.54 (13.8)	.701 (17.80)
8	.50 (12.6)	.71 (18.0)	.866 (22.00)
10	.66 (16.8)	.87 (22.2)	1.031 (26.20)
12	.83 (21.0)	1.04 (26.4)	1.197 (30.40)
14	.99 (25.2)	1.20 (30.6)	1.362 (34.60)
16	1.16 (29.4)	1.37 (34.8)	1.528 (38.80)
18	1.32 (33.6)	1.54 (39.0)	1.693 (43.00)
20	1.49 (37.8)	1.70 (43.2)	1.858 (47.20)
22	1.65 (42.0)	1.87 (47.4)	2.024 (51.40)
24	1.82 (46.2)	2.03 (51.6)	2.189 (55.60)

NOTES:

1) HOUSING MATERIAL:

"BLANK" - NYLON, UNFILLED U.L. 94V-2,
COLOR: NATURAL.

210 - NYLON, UNFILLED U.L. 94V-0,
COLOR: NATURAL.

BL - NYLON, UNFILLED U.L. 94V-2,
COLOR: BLACK.

400 - NYLON, UNFILLED U.L. 94V-0,
COLOR: BLACK.

TERMINAL MATERIAL: BRASS

2) TERMINAL PLATING:

"BLANK" - .000035/(.00090) MIN. REFLOWED MATTE TIN OVER .000020/(.00050) MIN. COPPER. (PREPLATE)
(FINISH IS BRIGHT IN APPEARANCE, THICKNESS AS APPLIED PRIOR TO REFLOW)

GS - .000030/(.00076) MIN. SELECT GOLD
.000100/(.00254) MIN. SELECT MATTE TIN
OVER .000050/(.00127) MIN. NICKEL OVERALL.

GS2 - .000015/(.00038) MIN. SELECT GOLD AND
.000100/(.00254) MIN. SELECT MATTE TIN
OVER .000050/(.00127) MIN. NICKEL OVERALL.

S - .000100/(.00254) MIN. BRIGHT TIN
OVER .000050/(.00127) MIN. NICKEL OVERALL.

MS - .000100/(.00254) MIN. MATTE TIN
OVER .000050/(.00127) MIN. NICKEL OVERALL.

3) PRODUCT SPECIFICATION: PS-5556-001

4) PACKAGING: SEE CHARTS

5) PART MATES WITH MINI-FIT JR. RECEPTACLE #5557.

6) MOUNTING OPTIONS:

"BLANK" - NO MOUNTING
(SEE SD-5566-002 DWG.)

2 - PEG MOUNT

7. PART CONFORMS TO CLASS "B" REQUIREMENTS OF COSMETIC SPECIFICATION PS-45499-002

8. ANTI-SHINGLING RIB MAY OR MAY NOT APPEAR ON HOUSINGS.

9. CONNECTORS ARE NOT TO BE MATED OR UNMATED WHILE CIRCUITS ARE LIVE.

10. PARTS ARE NOT DESIGNED FOR CURRENT SHARING.

RECOMMENDED HOLE LAYOUT FOR .070/(1.78) MAX. THICK P.C. BOARD

VIEWED FROM COMPONENT SIDE

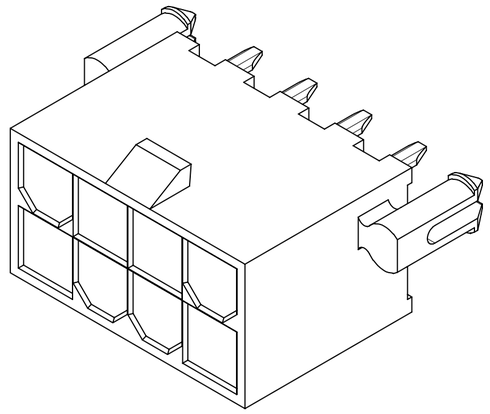

8 CKT SHOWN

LEGEND:

5566 - N * * * - * *

- BASE NUMBER
- CIRCUIT SIZE
- ASSEMBLY TYPE
  - A - W/O DRAIN HOLES
  - B - W/O DRAIN HOLES
  - (B: NOT RECOMMENDED FOR NEW APPLICATION)
- MOUNTING OPTION (SEE NOTE 6)
- PLATING (SEE NOTE 2)
- HOUSING MAT'L (SEE NOTE 1)
- PACKAGING
  - BLANK - TRAY
  - TR - TAPE & REEL

THIS DRAWING REPLACES SDA-5566-N*2*-*

THIS DRAWING CONTAINS INFORMATION THAT IS PROPRIETARY TO MOLEX ELECTRONIC TECHNOLOGIES, LLC AND SHOULD NOT BE USED WITHOUT WRITTEN PERMISSION

DIMENSION UNITS	SCALE
IN/MM	NTS

GENERAL TOLERANCES (UNLESS SPECIFIED)

	MM	INCH
4 PLACES	±	±
3 PLACES	±	± 0.015
2 PLACES	± 0.38	± 0.02
1 PLACE	± 0.5	±
0 PLACES	±	±
ANGULAR TOL	± 3.0 °	

DRAFT WHERE APPLICABLE MUST REMAIN WITHIN DIMENSIONS

CURRENT REV DESC:

EC NO: 784313
DRWN: JERRYW8 2023/08/10
CHK'D: XQZHANG 2024/09/11
APPR: XQZHANG 2024/09/11

INITIAL REVISION:
DRWN: RJF 1987/08/19
APPR: FSMITH 2012/01/10

molex

MINIFIT JR VERT HDR ASSY'S W/ PEGS

PRODUCT CUSTOMER DRAWING

DOCUMENT NUMBER	DOC TYPE	DOC PART	REVISION
55660021-SD	PSD	000	A4

THIRD ANGLE PROJECTION	DRAWING	SERIES	MATERIAL NUMBER	CUSTOMER	SHEET NUMBER
	C-SIZE	5566	SEE TABLE	GENERAL MARKET	1 OF 4

DOCUMENT STATUS	P1	RELEASE DATE	2024/09/11 06:39:17

FORMAT: Eng-lega-master-lb-prod-C
REVISION: E1
DATE: 2021/05/01

PLATING:	35 M.I. TIN
DRAIN HOLES:	WITHOUT DRAIN HOLES
MTG. OPTION:	WITH PEGS
HOUSING MAT'L:	NYLON 6/6 94V-2 NATURAL
PACKAGING:	PK-5566-001

PART NO.	ENG NO.	CKTS
39-29-9023	5566 -02A2	2
39-29-9043	5566 -04A2	4
39-29-9063	5566 -06A2	6
39-29-9083	5566 -08A2	8
39-29-9103	5566 -10A2	10
39-29-9123	5566 -12A2	12
39-29-9143	5566 -14A2	14
39-29-9163	5566 -16A2	16
39-29-9183	5566 -18A2	18
39-29-9203	5566 -20A2	20
39-29-9223	5566 -22A2	22
39-29-9243	5566 -24A2	24
	-	
	-	

PLATING:	35 M.I. TIN
DRAIN HOLES:	WITHOUT DRAIN HOLES
MTG. OPTION:	WITH PEGS
HOUSING MAT'L:	NYLON 6/6 94V-0 NATURAL
PACKAGING:	PK-5566-001

PART NO.	ENG NO.	CKTS
39-29-9027	5566 -02A2-210	2
39-29-9047	5566 -04A2-210	4
39-29-9067	5566 -06A2-210	6
39-29-9087	5566 -08A2-210	8
39-29-9107	5566 -10A2-210	10
39-29-9127	5566 -12A2-210	12
39-29-9147	5566 -14A2-210	14
39-29-9167	5566 -16A2-210	16
39-29-9187	5566 -18A2-210	18
39-29-9207	5566 -20A2-210	20
39-29-9227	5566 -22A2-210	22
39-29-9247	5566 -24A2-210	24
	-	
	-	

PLATING:	30 M.I. GOLD
DRAIN HOLES:	WITHOUT DRAIN HOLES
MTG. OPTION:	WITH PEGS
HOUSING MAT'L:	NYLON 6/6 94V-2 NATURAL
PACKAGING:	PK-5566-001

PART NO.	ENG NO.	CKTS
39-29-9025	5566 -02A2GS	2
39-29-9045	5566 -04A2GS	4
39-29-9065	5566 -06A2GS	6
39-29-9085	5566 -08A2GS	8
39-29-9105	5566 -10A2GS	10
39-29-9125	5566 -12A2GS	12
39-29-9145	5566 -14A2GS	14
39-29-9165	5566 -16A2GS	16
39-29-9185	5566 -18A2GS	18
39-29-9205	5566 -20A2GS	20
39-29-9225	5566 -22A2GS	22
39-29-9245	5566 -24A2GS	24
	-	
	-	

PLATING:	30 M.I. GOLD
DRAIN HOLES:	WITHOUT DRAIN HOLES
MTG. OPTION:	WITH PEGS
HOUSING MAT'L:	NYLON 6/6 94V-0 NATURAL
PACKAGING:	PK-5566-001

PART NO.	ENG NO.	CKTS
39-29-9029	5566 -02A2GS-210	2
39-29-9049	5566 -04A2GS-210	4
39-29-9069	5566 -06A2GS-210	6
39-29-9089	5566 -08A2GS-210	8
39-29-9109	5566 -10A2GS-210	10
39-29-9129	5566 -12A2GS-210	12
39-29-9149	5566 -14A2GS-210	14
39-29-9169	5566 -16A2GS-210	16
39-29-9189	5566 -18A2GS-210	18
39-29-9209	5566 -20A2GS-210	20
39-29-9229	5566 -22A2GS-210	22
39-29-9249	5566 -24A2GS-210	24
	-	
	-	

PLATING:	35 M.I. TIN
DRAIN HOLES:	WITHOUT DRAIN HOLES
MTG. OPTION:	WITH PEGS
HOUSING MAT'L:	NYLON 6/6 94V-2 NATURAL
PACKAGING:	PK-5566-001

PART NO.	ENG NO.	CKTS	
	5566 -02B2	2	*
39-29-9042	5566 -04B2	4	*
39-29-9062	5566 -06B2	6	*
39-29-9082	5566 -08B2	8	*
39-29-9102	5566 -10B2	10	*
39-29-9122	5566 -12B2	12	*
39-29-9142	5566 -14B2	14	*
39-29-9162	5566 -16B2	16	*
39-29-9182	5566 -18B2	18	*
39-29-9202	5566 -20B2	20	*
39-29-9222	5566 -22B2	22	*
39-29-9242	5566 -24B2	24	*
	-		
	-		

PLATING:	35 M.I. TIN
DRAIN HOLES:	WITHOUT DRAIN HOLES
MTG. OPTION:	WITH PEGS
HOUSING MAT'L:	NYLON 6/6 94V-0 NATURAL
PACKAGING:	PK-5566-001

PART NO.	ENG NO.	CKTS	
	5566 -02B2-210	2	*
39-29-9046	5566 -04B2-210	4	*
39-29-9066	5566 -06B2-210	6	*
39-29-9086	5566 -08B2-210	8	*
39-29-9106	5566 -10B2-210	10	*
39-29-9126	5566 -12B2-210	12	*
39-29-9146	5566 -14B2-210	14	*
39-29-9166	5566 -16B2-210	16	*
39-29-9186	5566 -18B2-210	18	*
39-29-9206	5566 -20B2-210	20	*
	5566 -22B2-210	22	*
39-29-9246	5566 -24B2-210	24	*
	-		
	-		

PLATING:	30 M.I. GOLD
DRAIN HOLES:	WITHOUT DRAIN HOLES
MTG. OPTION:	WITH PEGS
HOUSING MAT'L:	NYLON 6/6 94V-2 NATURAL
PACKAGING:	PK-5566-001

PART NO.	ENG NO.	CKTS	
	5566 -02B2GS	2	*
39-29-9044	5566 -04B2GS	4	*
39-29-9064	5566 -06B2GS	6	*
39-29-9084	5566 -08B2GS	8	*
39-29-9104	5566 -10B2GS	10	*
39-29-9124	5566 -12B2GS	12	*
39-29-9144	5566 -14B2GS	14	*
39-29-9164	5566 -16B2GS	16	*
39-29-9184	5566 -18B2GS	18	*
39-29-9204	5566 -20B2GS	20	*
39-29-9224	5566 -22B2GS	22	*
39-29-9244	5566 -24B2GS	24	*
	-		
	-		

PLATING:	30 M.I. GOLD
DRAIN HOLES:	WITHOUT DRAIN HOLES
MTG. OPTION:	WITH PEGS
HOUSING MAT'L:	NYLON 6/6 94V-0 NATURAL
PACKAGING:	PK-5566-001

PART NO.	ENG NO.	CKTS	
	5566 -02B2GS-210	2	*
39-28-9048	5566 -04B2GS-210	4	*
39-28-9068	5566 -06B2GS-210	6	*
39-28-9088	5566 -08B2GS-210	8	*
39-28-9108	5566 -10B2GS-210	10	*
39-28-9128	5566 -12B2GS-210	12	*
39-28-9148	5566 -14B2GS-210	14	*
39-28-9168	5566 -16B2GS-210	16	*
39-28-9188	5566 -18B2GS-210	18	*
39-28-9208	5566 -20B2GS-210	20	*
	5566 -22B2GS-210	22	*
39-28-9248	5566 -24B2GS-210	24	*
	-		
	-		

PART NUMBERS MARKED IN "*" IN THIS SHEET ARE NOT RECOMMENDED FOR NEW APPLICATION.
ALL WITH DRAIN HOLE VERSION PRODUCTS ARE CHANGED TO WITHOUT DRAIN HOLE VERSION PRODUCTS.

THIS DRAWING CONTAINS INFORMATION THAT IS PROPRIETARY TO MOLEX ELECTRONIC TECHNOLOGIES, LLC AND SHOULD NOT BE USED WITHOUT WRITTEN PERMISSION

DIMENSION UNITS	SCALE
IN/MM	NTS

GENERAL TOLERANCES (UNLESS SPECIFIED)

	MM	INCH
4 PLACES	±	±
3 PLACES	±	± 0.015
2 PLACES	± 0.38	± 0.02
1 PLACE	± 0.5	±
0 PLACES	±	±
ANGULAR TOL	± 3.0 °	

DRAFT WHERE APPLICABLE MUST REMAIN WITHIN DIMENSIONS

CURRENT REV DESC:

EC NO: 784313
DRWN: JERRYW8 2023/08/10
CHK'D: XQZHANG 2024/09/11
APPR: XQZHANG 2024/09/11

INITIAL REVISION:
DRWN: RJF 1987/08/19
APPR: FSMITH 2012/01/10

molex

MINIFIT JR VERT HDR ASSY'S W/ PEGS

PRODUCT CUSTOMER DRAWING

DOCUMENT NUMBER	DOC TYPE	DOC PART	REVISION
55660021-SD	PSD	000	A4

THIRD ANGLE PROJECTION	DRAWING	SERIES
	C-SIZE	5566

MATERIAL NUMBER	CUSTOMER	SHEET NUMBER
SEE TABLE	GENERAL MARKET	2 OF 4

DOCUMENT STATUS	P1	RELEASE DATE	2024/09/11 06:39:17

FORMAT: Eng-Vega-master-lib-prod-C
REVISION: E1
DATE: 2021/05/01

PLATING:	100 M.I. BRIGHT TIN
DRAIN HOLES:	WITHOUT DRAIN HOLES
MTG. OPTION:	WITH PEGS
HOUSING MAT'L:	NYLON 6/6 94V-2 NATURAL
PACKAGING:	PK-5566-001

PART NO.	ENG NO.	CKTS
39-30-6025	5566 -02A2S	2
39-30-6045	5566 -04A2S	4
39-30-6065	5566 -06A2S	6
39-30-6085	5566 -08A2S	8
39-30-6105	5566 -10A2S	10
39-30-6125	5566 -12A2S	12
39-30-6145	5566 -14A2S	14
39-30-6165	5566 -16A2S	16
39-30-6185	5566 -18A2S	18
39-30-6205	5566 -20A2S	20
39-30-6225	5566 -22A2S	22
39-30-6245	5566 -24A2S	24
	-	
	-	

PLATING:	100 M.I. BRIGHT TIN
DRAIN HOLES:	WITHOUT DRAIN HOLES
MTG. OPTION:	WITH PEGS
HOUSING MAT'L:	NYLON 6/6 94V-0 NATURAL
PACKAGING:	PK-5566-001

PART NO.	ENG NO.	CKTS
39-30-6026	5566 -02A2S-210	2
39-30-6046	5566 -04A2S-210	4
39-30-6066	5566 -06A2S-210	6
39-30-6086	5566 -08A2S-210	8
39-30-6106	5566 -10A2S-210	10
39-30-6126	5566 -12A2S-210	12
39-30-6146	5566 -14A2S-210	14
39-30-6166	5566 -16A2S-210	16
39-30-6186	5566 -18A2S-210	18
39-30-6206	5566 -20A2S-210	20
39-30-6226	5566 -22A2S-210	22
39-30-6246	5566 -24A2S-210	24
	-	
	-	

PLATING:	15 M.I. SELECT GOLD
DRAIN HOLES:	WITHOUT DRAIN HOLES
MTG. OPTION:	WITH PEGS
HOUSING MAT'L:	NYLON 6/6 94V-2 NATURAL
PACKAGING:	PK-5566-001

PART NO.	ENG NO.	CKTS
39-30-0026	5566 -02A2GS2	2
39-30-0046	5566 -04A2GS2	4
39-30-0066	5566 -06A2GS2	6
39-30-0086	5566 -08A2GS2	8
39-30-0106	5566 -10A2GS2	10
39-30-0126	5566 -12A2GS2	12
39-30-0146	5566 -14A2GS2	14
39-30-0166	5566 -16A2GS2	16
39-30-0186	5566 -18A2GS2	18
39-30-0206	5566 -20A2GS2	20
39-30-0226	5566 -22A2GS2	22
39-30-0246	5566 -24A2GS2	24
	-	
	-	

PLATING:	15 M.I. SELECT GOLD
DRAIN HOLES:	WITHOUT DRAIN HOLES
MTG. OPTION:	WITH PEGS
HOUSING MAT'L:	NYLON 6/6 94V-0 NATURAL
PACKAGING:	PK-5566-001

PART NO.	ENG NO.	CKTS
39-30-0027	5566 -02A2GS2-210	2
39-30-0047	5566 -04A2GS2-210	4
39-30-0067	5566 -06A2GS2-210	6
39-30-0087	5566 -08A2GS2-210	8
39-30-0107	5566 -10A2GS2-210	10
39-30-0127	5566 -12A2GS2-210	12
39-30-0147	5566 -14A2GS2-210	14
39-30-0167	5566 -16A2GS2-210	16
39-30-0187	5566 -18A2GS2-210	18
39-30-0207	5566 -20A2GS2-210	20
39-30-0227	5566 -22A2GS2-210	22
39-30-0247	5566 -24A2GS2-210	24
	-	
	-	

PLATING:	100 M.I. BRIGHT TIN
DRAIN HOLES:	WITHOUT DRAIN HOLES
MTG. OPTION:	WITH PEGS
HOUSING MAT'L:	NYLON 6/6 94V-2 NATURAL
PACKAGING:	PK-5566-001

PART NO.	ENG NO.	CKTS	
	5566 -02B2S	2	*
39-30-6047	5566 -04B2S	4	*
39-30-6067	5566 -06B2S	6	*
39-30-6087	5566 -08B2S	8	*
39-30-6107	5566 -10B2S	10	*
39-30-6127	5566 -12B2S	12	*
39-30-6147	5566 -14B2S	14	*
39-30-6167	5566 -16B2S	16	*
39-30-6187	5566 -18B2S	18	*
39-30-6207	5566 -20B2S	20	*
39-30-6227	5566 -22B2S	22	*
39-30-6247	5566 -24B2S	24	*
	-		
	-		

PLATING:	100 M.I. BRIGHT TIN
DRAIN HOLES:	WITHOUT DRAIN HOLES
MTG. OPTION:	WITH PEGS
HOUSING MAT'L:	NYLON 6/6 94V-0 NATURAL
PACKAGING:	PK-5566-001

PART NO.	ENG NO.	CKTS	
	5566 -02B2S-210	2	*
39-30-6048	5566 -04B2S-210	4	*
39-30-6068	5566 -06B2S-210	6	*
39-30-6088	5566 -08B2S-210	8	*
39-30-6108	5566 -10B2S-210	10	*
	5566 -12B2S-210	12	obselete
39-30-6148	5566 -14B2S-210	14	*
39-30-6168	5566 -16B2S-210	16	*
39-30-6188	5566 -18B2S-210	18	*
39-30-6208	5566 -20B2S-210	20	*
39-30-6228	5566 -22B2S-210	22	*
39-30-6248	5566 -24B2S-210	24	*
	-		
	-		

PLATING:	100 M.I. MATTE TIN
DRAIN HOLES:	WITHOUT DRAIN HOLES
MTG. OPTION:	WITH PEGS
HOUSING MAT'L:	NYLON 6/6 94V-2 NATURAL
PACKAGING:	PK-5566-001

PART NO.	ENG NO.	CKTS	
46999-0612	5566-02A2MS	2	*
46999-0501	5566-04A2MS	4	*
50-34-8559	5566-06A2MS	6	*
46999-0613	5566-08A2MS	8	*
46999-0614	5566-10A2MS	10	*
46999-0615	5566-12A2MS	12	*
46999-0616	5566-14A2MS	14	*
46999-0617	5566-16A2MS	16	*
46999-0618	5566-18A2MS	18	*
50-34-8560	5566-20A2MS	20	*
46999-0619	5566-22A2MS	22	*
46999-0620	5566-24A2MS	24	*

PLATING:	100 M.I. MATTE TIN
DRAIN HOLES:	WITHOUT DRAIN HOLES
MTG. OPTION	WITH PEGS
HOUSING MAT'L:	NYLON 6/6 94V-0 NATURAL
PACKAGING:	PK-5566-001

PART NO.	ENG NO.	CKTS	
46999-0621	5566-02A2MS-210	2	*
46999-0502	5566-04A2MS-210	4	*
50-34-8562	5566-06A2MS-210	6	*
50-34-8563	5566-08A2MS-210	8	*
46999-0622	5566-10A2MS-210	10	*
46999-0623	5566-12A2MS-210	12	*
50-34-8561	5566-14A2MS-210	14	*
46999-0624	5566-16A2MS-210	16	*
50-34-8564	5566-18A2MS-210	18	*
50-34-2357	5566-20A2MS-210	20	*
46999-0625	5566-22A2MS-210	22	*
50-34-8566	5566-24A2MS-210	24	*

PART NUMBERS MARKED IN "*" IN THIS SHEET ARE NOT RECOMMENDED FOR NEW APPLICATION.
ALL WITH DRAIN HOLE VERSION PRODUCTS ARE CHANGED TO WITHOUT DRAIN HOLE VERSION PRODUCTS.

THIS DRAWING CONTAINS INFORMATION THAT IS PROPRIETARY TO MOLEX ELECTRONIC TECHNOLOGIES, LLC AND SHOULD NOT BE USED WITHOUT WRITTEN PERMISSION

DIMENSION UNITS	SCALE
IN/MM	NTS

GENERAL TOLERANCES (UNLESS SPECIFIED)

	MM	INCH
4 PLACES	±	±
3 PLACES	±	± 0.015
2 PLACES	± 0.38	± 0.02
1 PLACE	± 0.5	±
0 PLACES	±	±
ANGULAR TOL	± 3.0 °	

DRAFT WHERE APPLICABLE MUST REMAIN WITHIN DIMENSIONS

CURRENT REV DESC:

EC NO: 784313
DRWN: JERRYW8 2023/08/10
CHK'D: XQZHANG 2024/09/11
APPR: XQZHANG 2024/09/11

INITIAL REVISION:
DRWN: RJF 1987/08/19
APPR: FSMITH 2012/01/10

THIRD ANGLE PROJECTION | DRAWING: C-SIZE | SERIES: 5566

molex

MINIFIT JR VERT HDR ASSY'S W/ PEGS

PRODUCT CUSTOMER DRAWING

DOCUMENT NUMBER	DOC TYPE	DOC PART	REVISION
55660021-SD	PSD	000	A4

MATERIAL NUMBER	CUSTOMER	SHEET NUMBER
SEE TABLE	GENERAL MARKET	3 OF 4

DOCUMENT STATUS	P1	RELEASE DATE	2024/09/11 06:39:17

FORMAT: Eng-Vega-master-lib-prod-C
REVISION: E1
DATE: 2021/05/01

PLATING:	35 M.I. TIN
DRAIN HOLES:	WITHOUT DRAIN HOLES
MTG. OPTION:	WITH PEGS
HOUSING MAT'L:	NYLON 6/6 94V-2 (BLACK)
PACKAGING:	PK-5566-001

PART NO.	ENG NO.	CKTS
	-	
39-31-9048	5566 -04A2-BL	4
	-	
39-31-9088	5566 -08A2-BL	8
	-	
	-	
	-	
	-	
	-	
	-	
	-	
	-	
	-	
	-	

PLATING:	35 M.I. TIN
DRAIN HOLES:	WITHOUT DRAIN HOLES
MTG. OPTION:	WITH PEGS
HOUSING MAT'L:	NYLON 6/6 94V-0 NATURAL
PACKAGING:	55660000-RPK

PART NO.	ENG NO.	CKTS
39-29-9300	5566-02A2-210TR	2
	-	
	-	
	-	
	-	
	-	
	-	
	-	
	-	
	-	
	-	
	-	
	-	

PLATING:	
DRAIN HOLES:	
MTG. OPTION:	
HOUSING MAT'L:	
PACKAGING:	

PART NO.	ENG NO.	CKTS

PLATING:	
DRAIN HOLES:	
MTG. OPTION:	
HOUSING MAT'L:	
PACKAGING:	

PART NO.	ENG NO.	CKTS

PLATING:	100 M.I. MATTE TIN
DRAIN HOLES:	WITHOUT DRAIN HOLES
MTG. OPTION:	WITH PEGS
HOUSING MAT'L:	NYLON 6/6 94V-0 BLACK
PACKAGING:	PK-5566-001

PART NO.	ENG NO.	CKTS
46999-0335	5566-02A2MS-400	2
46999-0336	5566-04A2MS-400	4
46999-0337	5566-06A2MS-400	6
46999-0338	5566-08A2MS-400	8
46999-0339	5566-10A2MS-400	10
46999-0340	5566-12A2MS-400	12
46999-0341	5566-14A2MS-400	14
46999-0342	5566-16A2MS-400	16
46999-0343	5566-18A2MS-400	18
46999-0344	5566-20A2MS-400	20
46999-0345	5566-22A2MS-400	22
46999-0346	5566-24A2MS-400	24
	-	
	-	

PLATING:	
DRAIN HOLES:	
MTG. OPTION:	
HOUSING MAT'L:	
PACKAGING:	

PART NO.	ENG NO.	CKTS

PLATING:	
DRAIN HOLES:	
MTG. OPTION:	
HOUSING MAT'L:	
PACKAGING:	

PART NO.	ENG NO.	CKTS

THIS DRAWING CONTAINS INFORMATION THAT IS PROPRIETARY TO MOLEX ELECTRONIC TECHNOLOGIES, LLC AND SHOULD NOT BE USED WITHOUT WRITTEN PERMISSION

DIMENSION UNITS	SCALE
IN/MM	NTS

GENERAL TOLERANCES (UNLESS SPECIFIED)

	MM	INCH
4 PLACES	±	±
3 PLACES	±	± 0.015
2 PLACES	± 0.38	± 0.02
1 PLACE	± 0.5	±
0 PLACES	±	±
ANGULAR TOL	± 3.0 °	

DRAFT WHERE APPLICABLE MUST REMAIN WITHIN DIMENSIONS

CURRENT REV DESC:

EC NO: 784313
DRWN: JERRYW8 2023/08/10
CHK'D: XQZHANG 2024/09/11
APPR: XQZHANG 2024/09/11

INITIAL REVISION:
DRWN: RJF 1987/08/19
APPR: FSMITH 2012/01/10

THIRD ANGLE PROJECTION | DRAWING: C-SIZE | SERIES: 5566

molex

MINIFIT JR VERT HDR ASSY'S W/ PEGS

PRODUCT CUSTOMER DRAWING

DOCUMENT NUMBER	DOC TYPE	DOC PART	REVISION
55660021-SD	PSD	000	A4

MATERIAL NUMBER	CUSTOMER	SHEET NUMBER
SEE TABLE	GENERAL MARKET	4 OF 4

DOCUMENT STATUS	P1	RELEASE DATE	2024/09/11 06:39:17

FORMAT: Eng-Vega-master-lib-prod-C
REVISION: E1
DATE: 2021/05/01