PRODUCT
P/N: XXXXX-XXXX

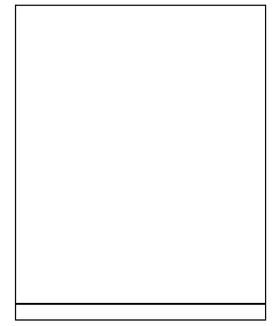

500 SETS PER BAG

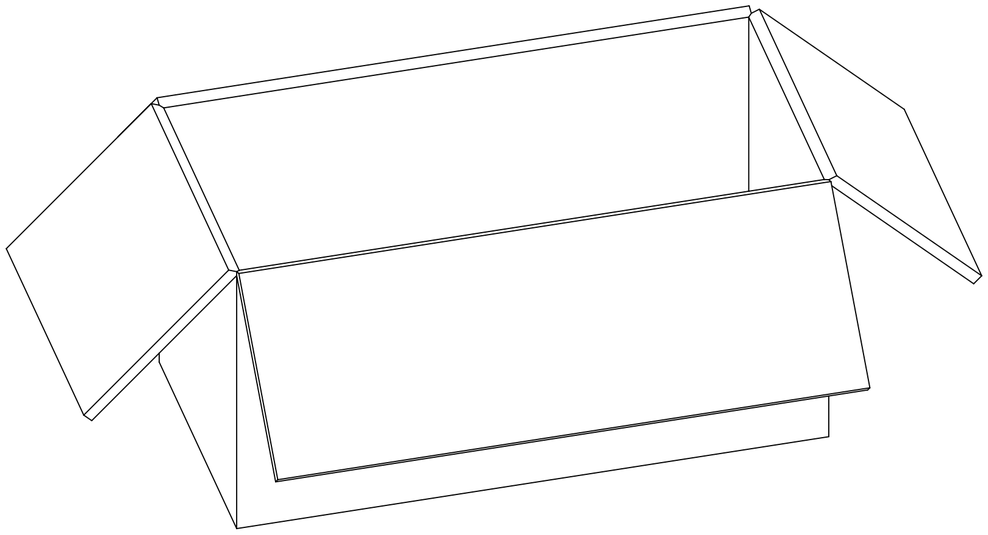

4000 SETS PER OUTER CARTON BOX

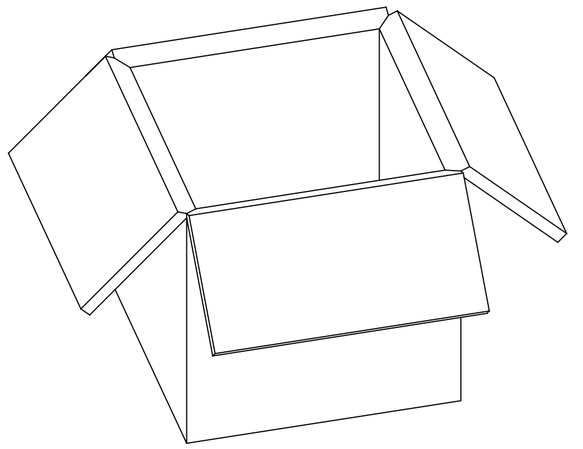

2000 SETS PER INNER CARTON BOX

THIS DRAWING CONTAINS INFORMATION THAT IS PROPRIETARY TO MOLEX ELECTRONIC TECHNOLOGIES, LLC AND SHOULD NOT BE USED WITHOUT WRITTEN PERMISSION

DIMENSION UNITS	SCALE
mm	NTS

GENERAL TOLERANCES (UNLESS SPECIFIED)

ANGULAR TOL	± °
4 PLACES	±
3 PLACES	±
2 PLACES	±
1 PLACE	±
0 PLACES	±

DRAFT WHERE APPLICABLE MUST REMAIN WITHIN DIMENSIONS

CURRENT REV DESC: NEW RELEASE PER EWR #15848-B

EC NO: 750290
DRWN: RYEH 2023/05/18
CHK'D: YCHENG 2023/05/24
APPR: YCHENG 2023/05/24

INITIAL REVISION:
DRWN: RYEH 2023/05/18
APPR: YCHENG 2023/05/24

molex

PACKAGING SPEC 89707-0001 (DU 4000)
EWR-15848

PRODUCT CUSTOMER DRAWING

DOCUMENT NUMBER	DOC TYPE	DOC PART	REVISION
895420161	PSD	000	A

THIRD ANGLE PROJECTION	DRAWING	SERIES	MATERIAL NUMBER	CUSTOMER	SHEET NUMBER
	C-SIZE	89542	895420161		1 OF 1

DOCUMENT STATUS	P1	RELEASE DATE	2023/05/24 11:34:24

FORMAT: tb-prod-C
REVISION: J1
DATE: 2021/05/01

MATERIALS & FINISHES:

BODY: BRASS
PLATING SEE TABLE

CONTACT: BERYLLIUM COPPER
GOLD (30µ-in MIN)

INSULATOR: TEFLON

NOTE:
73415-1696 & 73415-1697
WITH 4 SLOTS CONTACT

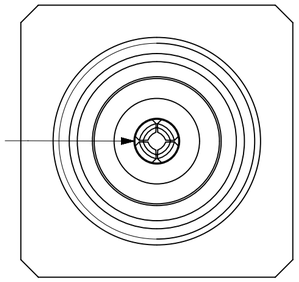

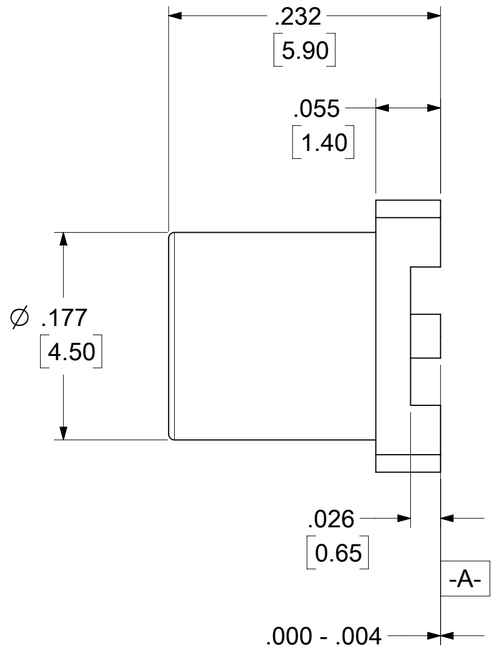

CONTACT TO BE FLUSH
TO .004/0.10 BELOW
SURFACE -A-

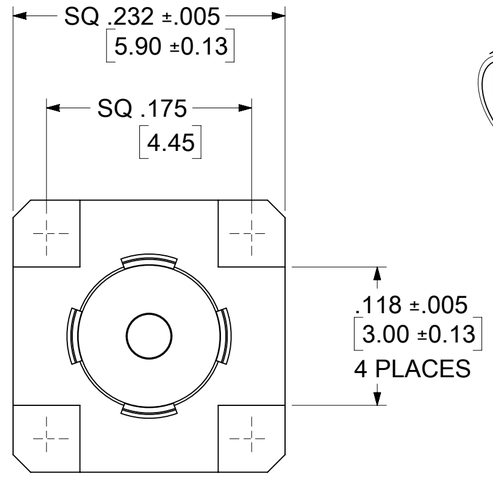

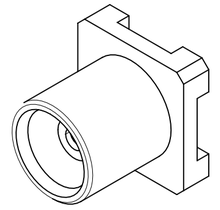

NOTE:
73415-1690 & 73415-1691 &
73415-1692 & 73415-1693 &
73415-1694 & 73415-1695 &
73415-1698 & 73415-1699 &
73366-6510
WITH 2 SLOTS CONTACT

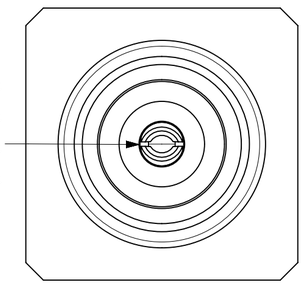

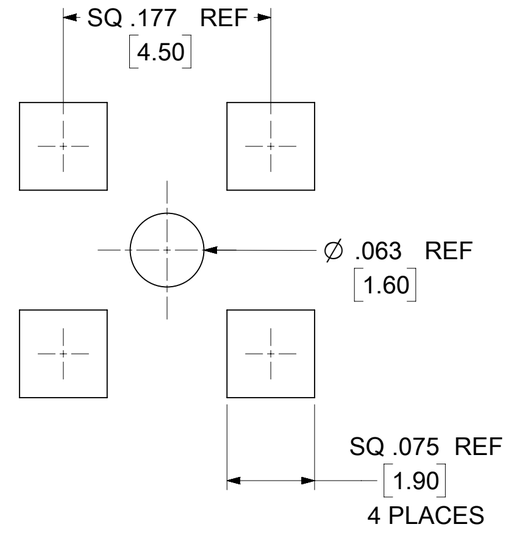

RECOMMENDED MOUNTING PATTERN

73366-6510	GOLD (1µ-in MIN)	2 SLOTS	73415-1691 TAPE & REEL WITH KAPTON	750 PCS PER REEL	SHEET 2, 3 & 4
73415-1699	GOLD (1µ-in MIN)	2 SLOTS	73416-1691 ONE PER BAG	1 PCS PER BAG	895420089
73415-1698	GOLD (30µ-in MIN)	2 SLOTS	73415-1698 TAPE & REEL WITH KAPTON	750 PCS PER REEL	SHEET 2, 3 & 4
73415-1697	GOLD (1µ-in MIN)	4 SLOTS	73415-1696 TAPE & REEL WITH KAPTON	750 PCS PER REEL	SHEET 2, 3 & 4
73415-1696	GOLD (1µ-in MIN)	4 SLOTS	73415-1696 BAG	500 PCS PER BAG	895420601
73415-1695	NICKEL	2 SLOTS	73415-1690 TAPE & REEL WITH KAPTON	750 PCS PER REEL	SHEET 2, 3 & 4
73415-1694	GOLD (1µ-in MIN)	2 SLOTS	73416-1691 SMALL TRAY	20 PCS PER TRAY	895420200
73415-1693	NICKEL	2 SLOTS	73415-1690 SMALL TRAY	20 PCS PER TRAY	895420200
73415-1692	GOLD (1µ-in MIN)	2 SLOTS	73415-1691 TAPE & REEL WITH KAPTON	750 PCS PER REEL	SHEET 2, 3 & 4
73415-1691	GOLD (1µ-in MIN)	2 SLOTS	73415-1691 BAG	500 PCS PER BAG	895420161
73415-1690	NICKEL	2 SLOTS	73415-1690 BAG	500 PCS PER BAG	895420161
PART NO.	BODY PLATING	CONTACT	DESCRIPTION	QUANTITY	PACKING SPEC

PS-89675-183	ELEC/MECH PERFORMANCE
SPECIFICATION	DESCRIPTION

DOCUMENT STATUS	P1	RELEASE DATE	2023/05/24 11:34:23									

THIS DRAWING CONTAINS INFORMATION THAT IS PROPRIETARY TO MOLEX ELECTRONIC TECHNOLOGIES, LLC AND SHOULD NOT BE USED WITHOUT WRITTEN PERMISSION

	MM	INCH
DIMENSION UNITS	INCH/MM	
SCALE	NTS	
GENERAL TOLERANCES (UNLESS SPECIFIED)		
4 PLACES	±	±
3 PLACES	±	± 0.01
2 PLACES	± 0.25	±
1 PLACE	±	±
0 PLACES	±	±
ANGULAR TOL	± 2.0 °	

DRAFT WHERE APPLICABLE MUST REMAIN WITHIN DIMENSIONS

CURRENT REV DESC: ADD PACKING SPEC PER EWR #15848-A

EC NO: 750290
DRWN: RYEH 2023/05/10
CHK'D: YCHENG 2023/05/24
APPR: YCHENG 2023/05/24

INITIAL REVISION:
DRWN: YCHENG 2007/02/08
APPR: MHUANG 2007/02/09

molex

MCX PCB/SMT JACK 50 OHM
MCX-J/PCB/SMT EWR-1148

PRODUCT CUSTOMER DRAWING

DOCUMENT NUMBER	DOC TYPE	DOC PART	REVISION
SD-73415-169	PSD	001	B7

THIRD ANGLE PROJECTION	DRAWING	SERIES	MATERIAL NUMBER	CUSTOMER	SHEET NUMBER
	C-SIZE	73415	SEE TABLE	GENERAL MARKET	1 OF 4

FORMAT: Eng-lega-master-tb-prod-C
REVISION: E1
DATE: 2021/05/21

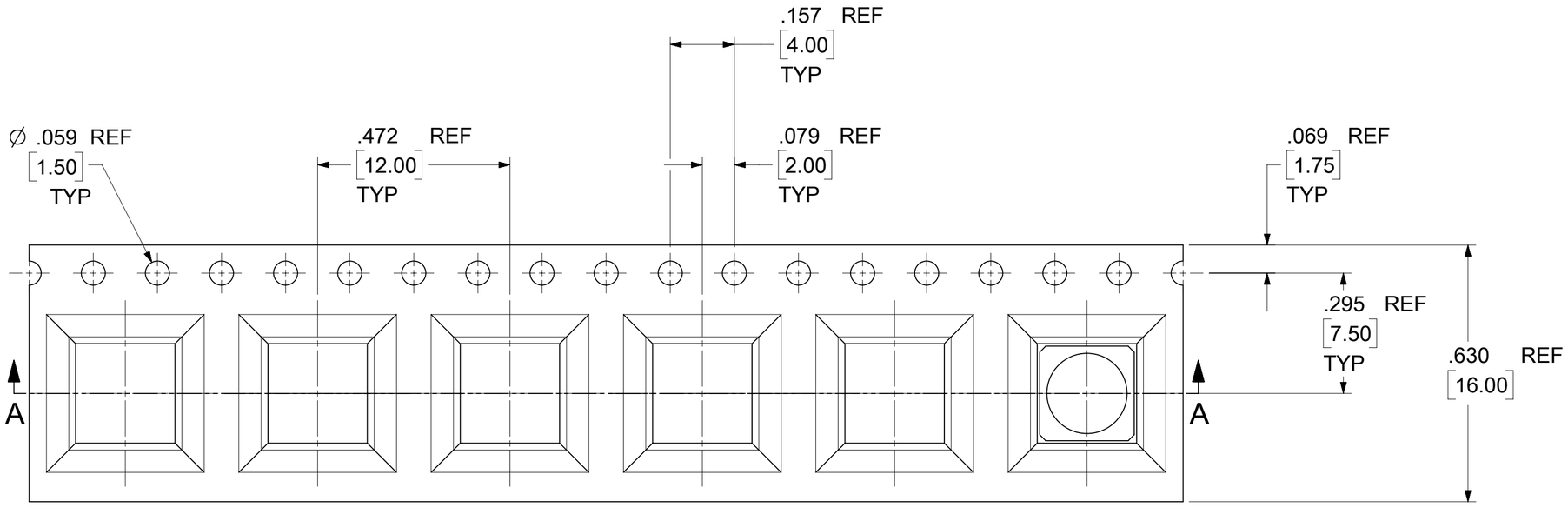

VIEWS FOR 73415-1692 & 73415-1695 & 73415-1697 & 73415-1698 & 73366-6510

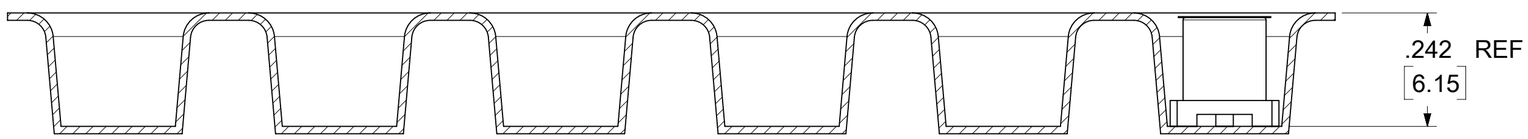

SECTION A-A

THIS DRAWING CONTAINS INFORMATION THAT IS PROPRIETARY TO MOLEX ELECTRONIC TECHNOLOGIES, LLC AND SHOULD NOT BE USED WITHOUT WRITTEN PERMISSION

DIMENSION UNITS	SCALE
INCH/MM	NTS

GENERAL TOLERANCES (UNLESS SPECIFIED)

	MM	INCH
4 PLACES	±	±
3 PLACES	±	± 0.01
2 PLACES	± 0.25	±
1 PLACE	±	±
0 PLACES	±	±
ANGULAR TOL	± 2.0 °	

DRAFT WHERE APPLICABLE MUST REMAIN WITHIN DIMENSIONS

CURRENT REV DESC: ADD PACKING SPEC PER EWR #15848-A

EC NO: 750290

DRWN: RYEH 2023/05/10

CHK'D: YCHENG 2023/05/24

APPR: YCHENG 2023/05/24

INITIAL REVISION:

DRWN: YCHENG 2007/02/08

APPR: MHUANG 2007/02/09

molex

MCX PCB/SMT JACK 50 OHM
MCX-J/PCB/SMT EWR-1148

PRODUCT CUSTOMER DRAWING

DOCUMENT NUMBER	DOC TYPE	DOC PART	REVISION
SD-73415-169	PSD	001	B7

THIRD ANGLE PROJECTION	DRAWING	SERIES	MATERIAL NUMBER	CUSTOMER	SHEET NUMBER
	C-SIZE	73415	SEE TABLE	GENERAL MARKET	2 OF 4

DOCUMENT STATUS	P1	RELEASE DATE	2023/05/24 11:34:23

FORMAT: Eng-lega-master-tb-prod-C
REVISION: E1
DATE: 2021/05/01

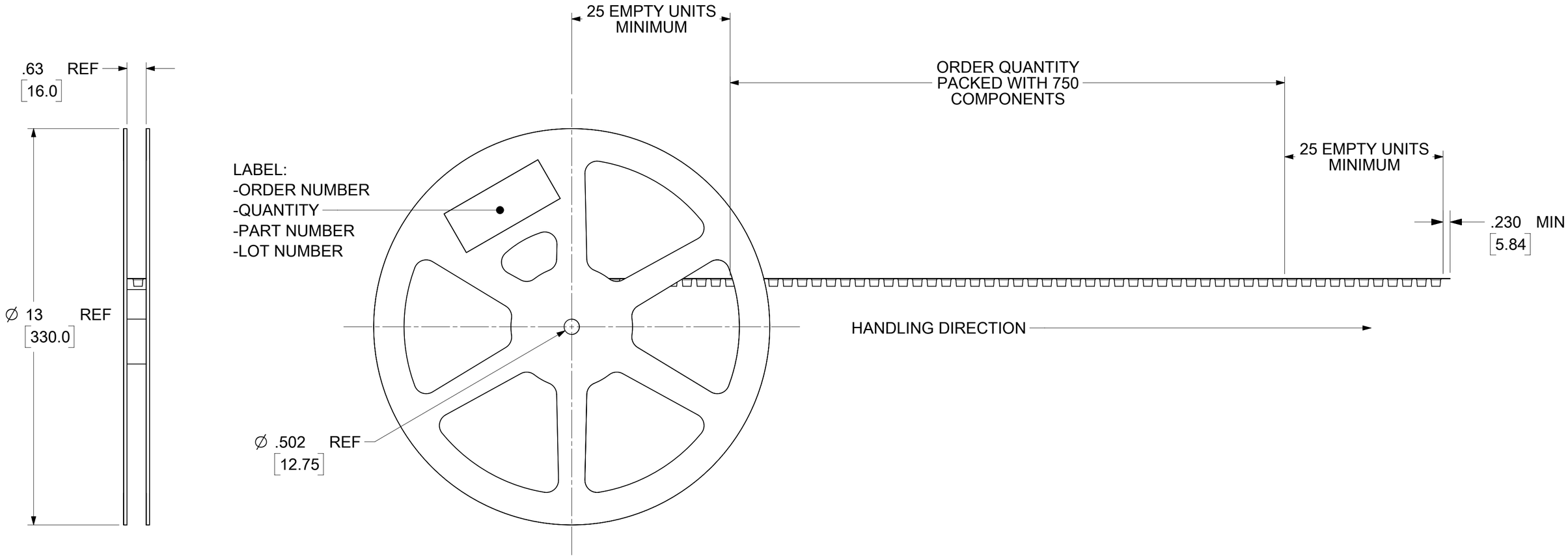

VIEWS FOR 73415-1692 & 73415-1695 & 73415-1697 & 73415-1698 & 73366-6510

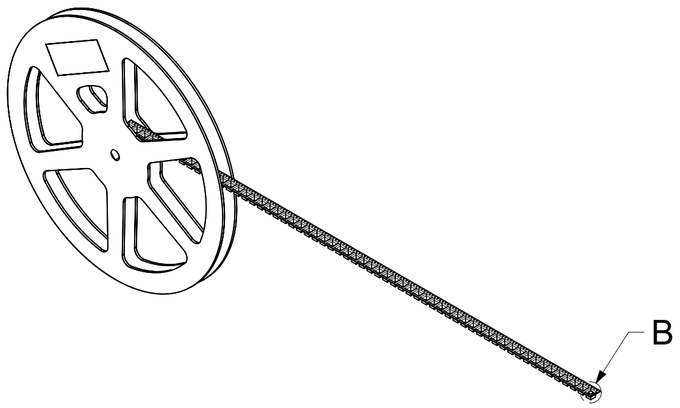

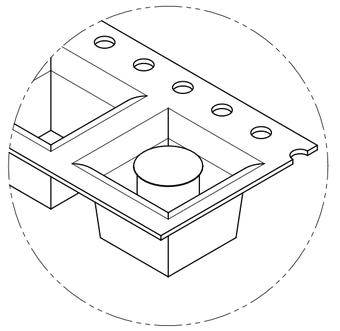

DETAIL B

THIS DRAWING CONTAINS INFORMATION THAT IS PROPRIETARY TO MOLEX ELECTRONIC TECHNOLOGIES, LLC AND SHOULD NOT BE USED WITHOUT WRITTEN PERMISSION

DIMENSION UNITS	INCH/MM
SCALE	NTS

GENERAL TOLERANCES (UNLESS SPECIFIED)

	MM	INCH
4 PLACES	±	±
3 PLACES	±	± 0.01
2 PLACES	± 0.25	±
1 PLACE	±	±
0 PLACES	±	±
ANGULAR TOL	± 2.0 °	

DRAFT WHERE APPLICABLE MUST REMAIN WITHIN DIMENSIONS

CURRENT REV DESC: ADD PACKING SPEC PER EWR #15848-A

EC NO: 750290

DRWN:	RYEH	2023/05/10
CHK'D:	YCHENG	2023/05/24
APPR:	YCHENG	2023/05/24

INITIAL REVISION:

DRWN:	YCHENG	2007/02/08
APPR:	MHUANG	2007/02/09

THIRD ANGLE PROJECTION | DRAWING: C-SIZE | SERIES: 73415

molex

MCX PCB/SMT JACK 50 OHM
MCX-J/PCB/SMT EWR-1148

PRODUCT CUSTOMER DRAWING

DOCUMENT NUMBER	DOC TYPE	DOC PART	REVISION
SD-73415-169	PSD	001	B7

MATERIAL NUMBER	CUSTOMER	SHEET NUMBER
SEE TABLE	GENERAL MARKET	3 OF 4

DOCUMENT STATUS	P1	RELEASE DATE	2023/05/24 11:34:23

FORMAT: Eng-lega-master-tb-prod-C
REVISION: E1
DATE: 2021/05/01

73415-1698	73415-1698 TAPE & REEL WITH KAPTON	750 PCS	6000 PCS
73415-1697	73415-1696 TAPE & REEL WITH KAPTON	750 PCS	6000 PCS
73415-1695	73415-1690 TAPE & REEL WITH KAPTON	750 PCS	6000 PCS
73415-1692	73415-1691 TAPE & REEL WITH KAPTON	750 PCS	6000 PCS
PART NO.	DESCRIPTION	QTY/REEL	QTY/CARTON



750 PCS PER REEL

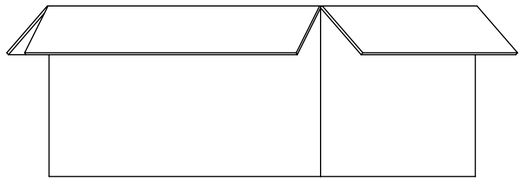

8 REELS PER INNER CARTON BOX
(8 X 750 = 6000 PCS)

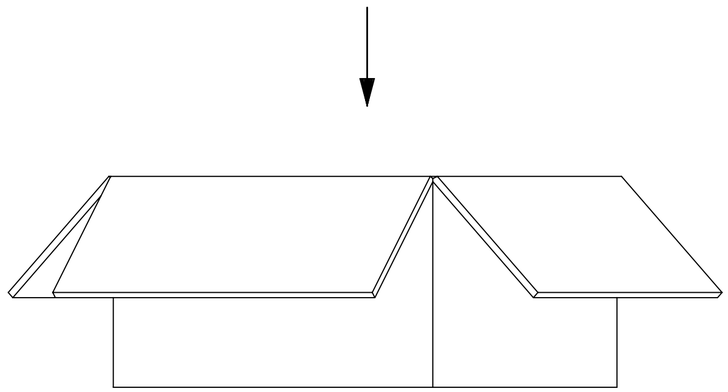

8 REELS PER OUTER CARTON BOX
(8 X 750 = 6000 PCS)

73366-6510	73415-1691 TAPE & REEL WITH KAPTON	750 PCS	750 PCS
PART NO.	DESCRIPTION	QTY/REEL	QTY/CARTON



750 PCS PER REEL

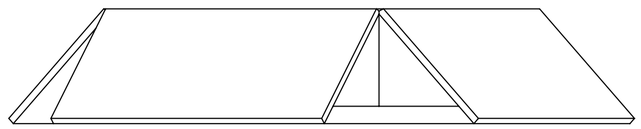

1 REEL PER CARTON BOX
(1 X 750 = 750 PCS)

THIS DRAWING CONTAINS INFORMATION THAT IS PROPRIETARY TO MOLEX ELECTRONIC TECHNOLOGIES, LLC AND SHOULD NOT BE USED WITHOUT WRITTEN PERMISSION

DIMENSION UNITS	SCALE
INCH/MM	NTS

GENERAL TOLERANCES (UNLESS SPECIFIED)

	MM	INCH
4 PLACES	±	±
3 PLACES	±	± 0.01
2 PLACES	± 0.25	±
1 PLACE	±	±
0 PLACES	±	±
ANGULAR TOL	± 2.0 °	

DRAFT WHERE APPLICABLE MUST REMAIN WITHIN DIMENSIONS

CURRENT REV DESC: ADD PACKING SPEC PER EWR #15848-A

EC NO: 750290
DRWN: RYEH 2023/05/10
CHK'D: YCHENG 2023/05/24
APPR: YCHENG 2023/05/24

INITIAL REVISION:
DRWN: YCHENG 2007/02/08
APPR: MHUANG 2007/02/09

molex

MCX PCB/SMT JACK 50 OHM
MCX-J/PCB/SMT EWR-1148

PRODUCT CUSTOMER DRAWING

DOCUMENT NUMBER	DOC TYPE	DOC PART	REVISION
SD-73415-169	PSD	001	B7

THIRD ANGLE PROJECTION	DRAWING	SERIES	MATERIAL NUMBER	CUSTOMER	SHEET NUMBER
	C-SIZE	73415	SEE TABLE	GENERAL MARKET	4 OF 4

DOCUMENT STATUS	P1	RELEASE DATE	2023/05/24 11:34:23

FORMAT: Eng-lega-master-tb-prod-C
REVISION: E1
DATE: 2021/05/01